BOOK

IS

BRITTLE

PLEASE Handle with care

3 1761 00044025 5

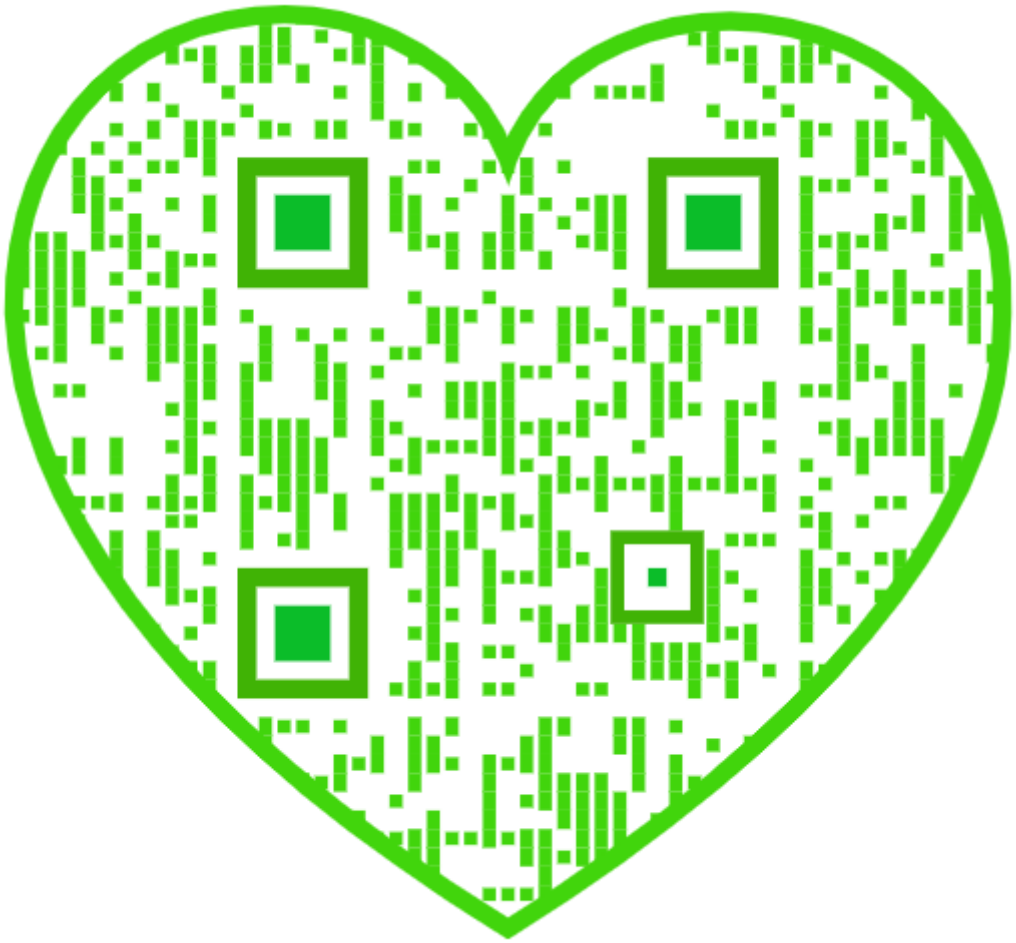

CHRISTIAN FREDERICK SCHONBEIN
Discoverer of the Cellulose Nitrates.

NITROCELLULOSE INDUSTRY

A COMPENDIUM OF THE HISTORY, CHEMISTRY, MANUFACTURE, COMMERCIAL APPLICATION AND ANALYSIS OF NITRATES, ACETATES AND XANTHATES OF CELLULOSE AS APPLIED TO THE PEACEFUL ARTS

WITH A CHAPTER ON

GUN COTTON, SMOKELESS POWDER AND EXPLOSIVE CELLULOSE NITRATES

BY

EDWARD CHAUNCEY WORDEN, PH.C., M.A., F.C.S.

MEMBER SOCIETY OF CHEMICAL INDUSTRY
MEMBER AMERICAN CHEMICAL SOCIETY

IN TWO VOLUMES

VOLUME I.

[illegible] ILLUSTRATIONS

SEEN BY
PRESERVATION
SERVICES
DATE.....

124372
25 1 12

LONDON
CONSTABLE AND COMPANY LTD.
1911

Copyright 1911,
BY
D. VAN NOSTRAND COMPANY

To

My Wife

Anna B. Worden

To Whose Inspiration and Material Assistance in Preparation Has Been Due

This Work

is

Affectionately Dedicated

PREFACE

THE following pages endeavor to indicate, in general by statement, and in detail by additional references, the fundamental facts constituting the industry of nitrocellulose commensurate with the magnitude and importance of the subject, and in so doing to bring out the fact that the existence, continuity, and advancement of these arts depend primarily upon the fidelity with which human ingenuity has been able to imitate nature in the production of that which is rare and beautiful, and hence much sought after and costly.

The general arrangement of the subject matter is as follows: After recording some facts respecting cellulose bearing on the development of the subsequent topics (Chapter I), the theory (II) and manufacture (III) of the cellulose nitrates is taken up. Inasmuch as in the dry state, the latter have but comparatively few uses, the solvents (IV), especially fusel oil (V), from which the solvent amyl acetate is prepared (VI), follows, and the latent solvent camphor and its substitutes (VII) of rapidly increasing interest. These solvents are used extensively in modern paint removers and turpentine substitutes (VIII). Combining the cellulose nitrates with the aforesaid solvents (IX), results in the formation of lacquers (X), artificial (XI) and real (XII) leather coatings, and the formation of imitation silk filaments (XIII). The second volume combines the materials of II, III, and VII in the formation of pyroxylin plastics typified by celluloid (XIV), the collodions being used in pharmacy (XV) and photography (XVII) and in a purified form as the celloidin and photoxylon of microscopy (XVI). Guncotton and the higher nitrates in smokeless powders and explosives complete (XVIII) the technical uses. Closely allied are the cellulose acetates (XIX) and xanthates (XX). There is hardly a branch of the foregoing in which denatured ethyl alcohol (XXI) is not being extensively used.

Excluding Chapters I and XVIII, and with the possible exception of XIV and XX, so far as the author is aware, there is not to be found in the literature of any language so complete an account of the topics

included in these pages as are presented herewith, i.e., nowhere has so large a number of facts been published concerning (say) artificial filaments as are contained in XIII. The material comprised in IV–XII inclusive, concerning which but little authentic information is obtainable, has been largely drawn from the author's personal experience.

The method of treatment of the subject matter has been to divide it into text in larger print for the general reader, supplemented by the notes in finer print, being elaboration, detail, and bibliography for the expert. It is assumed that the reader possesses an elementary working knowledge of chemistry and the ability to interpret scale drawings. An attempt has been made to remedy the defect so often felt in industrial works where the text seems to leave off at just that point where specific information is most desired. And in contradistinction perhaps to the general rule in the treatment of industrial works, there has in this instance been no mental reservation whatever in the development of the subject. The cellulose nitrates cover such a broad field—pharmacy, medicine, microscopy, photography, explosives, and general technology, etc., as evidenced by the succeeding list of four hundred twenty-five series of scientific repositories which were drawn upon—that certain contractions were deemed necessary in order to encompass the entire field in the necessary detail. The text was lengthened nearly fifteen per cent and the width of the lines over ten per cent over the customary area for a page of this size; the abbreviations were condensed to the least length compatible with clearness; the 324 illustrations were reduced to the smallest size which would still show the detail required, and the topics have been judiciously separated so that the notes—one page of which in subject matter is equivalent to two and one-half pages of text—comprise fully 60% of the volume of the work. In this manner it has been possible to condense within 1150 pages without materially detracting from the clearness of presentation, information equivalent in volume to over nineteen hundred pages of octavo text.

The short historical portion usually preceding the development of each subject enables an inventor to determine what the art has disclosed to the present time, and whether others have partially or fully anticipated his ideas.

There has been incorporated references to processes and descriptions which to the author have not appeared commercially feasible. However, others of keener discernment may see in them points of merit leading to ultimate success, and therein the value of their enumeration lies.

In some portions of the work, i.e., photography, pharmacy, microscopy, etc., the weights and measures used therein have been retained, although not of the metric system, for it was considered that the wishes of those who would be most interested in those particular fields are, in a work like this, entitled to respectful consideration.

In certain patent specifications and elsewhere conflict in nomenclature and spelling occurs, due to verbatim quotation, the inconsistencies being explained away by this statement.

When it is recalled that patent specifications are usually the first and often the only information appearing in regard to a technical process, and that the incorporation in any patent of a process or product which cannot be prepared from the description invalidates the patent, it is felt that no explanation is needed for the large number of patents which have been drawn upon.

The central thought underlying the development of the several subjects has been the fact—recognized by so few—that the phenomenal expansion and ramifications of the cellulose nitrates in their industrial applications, has been primarily due to extensions of the number and usefulness of solvents, and not, as one would be led to infer from inspection of the scant literature, development in cellulose nitrate manufacture.

It obviously has been impossible to personally verify the accuracy of the over eight thousand literature references contained in this work. Such as were accessible in the Astor and other libraries in New York city and vicinity have been traced to their original sources. The author—perhaps more keenly than anyone else—realizes the existing imperfections, especially in the perspective of the completed text, when too late for radical changes. For those errors and omissions incident to a first edition and otherwise suggestions and criticisms will be gratefully received.

To Messrs. Benjamin L. Murray, John H. Stevens, John W. Hyatt, Dr. Jasper E. Crane, Major Odus C. Horney, Col. B. W. Dunn, and the other gentlemen who have allowed him to draw from their fund of specialized information, the author acknowledges his indebtedness. Figures 287, 289, 295, and 302 are from photographs taken by Mr. Murray. Acknowledgment is especially made to the Journal of the Society of Chemical Industry—the most comprehensive chemical technology in the English language—which has been freely drawn upon, and to Arms and Explosives, for much data incorporated in Chapter XVIII.

By holding the entire work in corrected galley proof until the last page was monotyped, and then breaking the galley into a large

number of sections for simultaneous dummy paging, it has been possible to uniformly bring the information of all the topics to the close of the year 1910.

Many a valuable work has had its usefulness greatly impaired by the incompleteness, brevity or faulty construction of the index, which, in reality, is of more importance than an equal number of pages of text, for of what value is recorded information if rendered inaccessible and unavailable by omission in the index? A sincere effort has been made in the compilation of the three indices herewith —patent, author, and subject, embracing 4993, 3670, and 8755 citations respectively—to adequately cover the subject matter. In this the author has been most ably assisted by Mr. John W. Bruce, to whom he desires to express his thanks.

What has been accomplished and described herein is only to be taken as an index of the much greater and more attractive possibilities to come, for the industrial potentialities of the cellulose nitrates —which as yet are but in their infancy—are practically limitless.

EDWARD CHAUNCEY WORDEN.

MILBURN, NEW JERSEY, February 15, 1911.

TABLE OF CONTENTS

CHAPTER I

Cellulose

	PAGE
Classification of Celluloses	3
Compound Celluloses	3
Separation of Cellulose	4
Ash	5
Cellulose and Water	5
Action of Acids on Cellulose	7
Cellulose Hydrates	7
Amyloid	8
Oxycellulose	8
Action of Alkalis on Cellulose	9
Action of Oxidizing Agents	11
Cotton	11
Gathering the Cotton	13
Commercial Varieties	13
Structure	14
Chemical Composition	16
Bombax Cotton	16
Vegetable Silk	17
Wood Fiber	17
Alcohol from Wood	18
Vulcanized Fiber	18
Cellulith	19
Cellulose Waterproofing Preparations	19
Pergamyn	20

CHAPTER II

Cellulose Nitrates

	PAGE
Historical	21
The Cellulose Nitrates	24
The Nitrates of Eder	26
Hexanitrate	26
Pentanitrate	27
Cellulose dinitrate	27
Researches of Vieille	28
Investigations of Lunge	29
Theory of Nitration	35
Commercial Nomenclature of Cellulose Nitrates	37
Cellulose used for Nitration	38
U. S. Ordnance Requirements	41
Properties	42
Optical Properties	44
Hygroscopicity of Cellulose Nitrates	45
Variations in Solubility and Viscosity	47
Stability of the Cellulose Nitrates	50
Starch Nitrate	54
Nitropentaerythrite	57
Nitrates of the Carbohydrates	58
Other Nitrated Celluloses	59
Nitrates of Hydro- and Oxy-cellulose	61
Determination of Solubility	62
Estimation of Viscosity	63
Determination of Nitrogen by Lunge Nitrometer	65
Determination of Nitrogen with the Gas-volumeter	66
Determination of Nitrogen Oxides	69
Determination of Mixed and Spent Acids	70
Unaltered Cellulose	71
Preparation of Acid-proof Nitrated Filter Cloth	72

CHAPTER III

The Nitration of Cellulose

	PAGE
Historical	73
Classes of Cellulose Nitrates Produced in the United States	75
U. S. Ordnance Requirements for Nitrocellulose Manufacture	76

PAGE
Treatment of Cotton Preliminary to Nitration ... 77
Teasing ... 79
Scouring ... 80
Bleaching ... 81
Drying the Cotton ... 82
Acids used in Nitration ... 83
Direct Dipping Process ... 84
Nitration of Cotton by Hand ... 86
Nitration by Centrifugals ... 90
The Thompson Displacement Process ... 96
Nitration of Paper ... 104
Hyatt's Paper Nitration Process ... 107
Nitration of Cotton for Cheaper Grade of Pyroxylin ... 114
Pyroxylins of Low Nitrogen Content ... 115
Other Later Processes ... 117
Washing ... 118
Stabilizing ... 119
Pulping ... 121
Removal of Foreign Bodies ... 123
Poaching ... 124
Blending ... 124
Centrifugal Dehydration ... 124
Dehydration by Hydraulic Pressure ... 127
Drying the Nitrated Cotton ... 129
Fortification and Acid Recovery ... 131
The Evers Denitration Tower ... 137
The Redpath Method of Acid Calculation ... 138
Dangers in Connection with the Nitration of Cellulose ... 142

CHAPTER IV

Solvents and Non-Solvents

History of Nitrocellulose Solvents ... 144
Classes of Solvents ... 159
Acetone ... 166
Ether ... 167
Glacial Acetic Acid ... 167
Nitrobenzene ... 168
Cellulose Nitrate Non-solvents ... 169
Cellulose Non-solvents ... 169
Chloroform ... 170
Carbon Tetrachloride ... 170
The Chlor-ethanes ... 171
Phenyl Acetate ... 172

CHAPTER V

Fusel Oil and the Amyl Alcohols

PAGE
History ... 174
Occurrence of Fusel Oil ... 176
Composition of Fusel Oil ... 176
Methyl Alcohol ... 181
Ethyl Alcohol ... 182
Normal Propyl Alcohol ... 182
*Iso*propyl or Secondary Propyl Alcohol ... 184
Normal Butyl Alcohol ... 184
*Iso*butyl Alcohol ... 185
Amyl Alcohols ... 186
Detection of Amyl Alcohol ... 188
Synthetic Fusel Oil ... 189
Toxic Properties of Fusel Oil ... 200
Rectification of Crude Fusel Oil ... 201
Commercial Uses ... 207
Analysis of Crude Fusel Oil ... 208
Amyl Alcohol, Tests of Purity ... 211

CHAPTER VI

Amyl Acetate

Manufacture of Amyl Acetate ... 214
Charging the Still ... 215
First Fraction ... 219
Second Fraction ... 220
Bottoms ... 220
Aqueous Distillate ... 220
Oily Distillate ... 223
Recovery of Acetic Acid ... 223
Redistilling the Amyl Acetate ... 224
Yields ... 224
Properties and Uses ... 227
Methyl Acetate ... 228
Ethyl Acetate ... 229
Propyl and Butyl Acetates ... 231
Amyl Formate ... 232
Examination of Commercial Amyl Acetate ... 233

CHAPTER VII

Natural, Artificial, and Synthetic Camphor. Camphor Substitutes

Camphor ... 235
Artificial Camphor ... 237
Synthetic Camphor ... 237
Camphor Substitutes ... 248

PAGE
Lowering the Melting-point of Camphor.. 257

CHAPTER VIII

Paint and Varnish Removers. Turpentine Substitutes

Disintegrating Paint Removers 260
Solvent Paint Removers.. 262
Proteid-Containing Paint Removers 267
Stripping Paint Removers 269
Turpentine Substitutes 272

CHAPTER IX

Pyroxylin Solutions

Dissolving Small Amounts of Pyroxylin.. 276
Filtration of Pyroxylin Solutions 278
Dissolving.. 279
Filtration.. 287
Storing.. 294

CHAPTER X

Pyroxylin Lacquers, Enamels, and Bronzing Fluids

Collodion Lacquers.. 298
Celluloid Lacquers.. 299
Modern or Amyl Acetate Lacquers. 300
Hale's Process.. 301
Field's Experiments.. 303
Crane's Acetone Oil Lacquers.. 303
Other Amyl Acetate Lacquer Processes.. 304
Classification of Pyroxylin Lacquers 305
Dip Lacquers.. 305
Brush Lacquers.. 306
The Inflammability of Lacquers.. 307
Bronzing Liquids.. 308
Preparation of Gilded Lace.. 311
Imitation Mother-of-Pearl Films.. 311
Imitation Gold Leaf.. 312
Heat-Resisting Bronzing Liquids.. 313
"Kerosene-Soluble" Bronzing Liquids.. 314
"Water-Soluble" Bronzing Liquids 314
Testing of Bronzing Liquids.. 315
Manufacture of Aluminum and Bronzes.. 315

PAGE
Pyroxylin Lacquers.. 316
Method of Using Pyroxylin Lacquers.. 318
Pyroxylin in Paper Impregnation.. 321
Manufacture of Collapsible Tubes.. 322
Coating Sounding Tubes.. 323
Testing of Pyroxylin Lacquers.. 324
Antifouling Compositions.. 327
Preparation of Museum Specimens.. 328
Colored Lacquers.. 328
White Enamels.. 332
Modern Celluloid Lacquers.. 333
Resin Lacquers.. 334
Shellac.. 335
Shellac Lacquers.. 336
Burning off Lacquers.. 338
French Bedstead Lacquers.. 338
Pegamoid.. 339
Copal.. 339
Copal Lacquers.. 340
Sandarac.. 341
Mastic.. 343
Black Lacquers.. 343
Pyroxylin-Resin Lacquers.. 345
Pyroxylin and Shellac.. 345
Wood Enamels.. 346
The Coating of Golf Balls.. 349
Lacquering Billiard Balls.. 350
Pyroxylin Floor Lacquers.. 351
Imitating Mahogany, Rosewood, Cocobola and Ebony with Pyroxylin Lacquers.. 351
Pyroxylin and Copal.. 352
Welsbach Mantles.. 352
Cerofirm.. 357
Chemical Examination of Pyroxylin Lacquers.. 358

CHAPTER XI

Imitation Leather and Fur. The Waterproofing of Textiles

Artificial Leathers Containing Leather.. 360
Pyroxylin and Leather-Free Artificial Leathers.. 361
Pyroxylin Containing Artificial Leathers.. 363
Artificial Pyroxylin Leather in the United States.. 367

PAGE
Dyeing the Cloth 371
Measuring 374
Inspecting 375
Cleaning the Cloth 375
Stitching 377
Coating the Cloth 378
Solvent Recovery 387
Classes of Artificial Leather 388
Calendering 390
Embossing 390
Varnishing 393
Hand Decorated Leather 394
Smoothing 395
Antique Leather 396
Uninflammable Artificial Leathers 397
Deodorizing 398
Decreasing Cost of Producing Pyroxylin Artificial Leathers 399
Artificial Chamois Leather 401
Artificial Sole Leather 401
Artificial Split Leather 402
Artificial Patent Leather 404
Carriage-Top Cloth 405
Imitation Cork 406
Imitation Furs 408
Artificial Feathers 410
India-Rubber Substitutes 411
Velvril 412
Pyroxylin Waterproofing Compositions 413
Enameled Paper. Wall Coverings 418
Printing on Fabrics with Pyroxylin 421
Imitation Textiles 421
Artificial Leather Cements 423

CHAPTER XII

Pyroxylin-Coated Enamel and Patent Leathers

Tanning 426
Past Processes for the Ornamentation of Leather 428
Earlier Methods of Coating Skins with Pyroxylin 429
The Process of Field 431
A. Kennedy's Method 432
Enameling Composition of Byron Goldsmith 432
The Adams & McKay Process 432
De Montford's Film Enamel 434
PAGE
Classes of Leather Coated with Pyroxylin 435
Coating of Buff Splits 436
Coating of Grain Splits 438
Coating of Flesh Splits 442
Chrome Tan-Leather 443
Preparation of Patent and Enameled Leather 445
Boiling the Linseed Oil 446
Preparing the Pyroxylin Solutions 447
Applying the Compositions to the Leather 449
Production of Colored and Fancy Coatings 451
The Coating of Furs and Skins 453

CHAPTER XIII

Artificial Filaments

Nitrocellulose Silks 459
Chardonnet Silk 460
F. Lehner's Artificial Silk 471
J. Du Vivier Silk, also termed "Fismes Silk" 479
Process of L. Crespin 480
Method of M. Denis 482
P. Cazeneuve Process 484
Other Nitrocellulose Filament Processes 484
Denitration of Cellulose Nitrate 487
Solvent Recovery 492
"Cuprammonium" Silks 496
Glanzstoff Silk or Givet Silk 501
R. Linkmeyer 507
"Cellulo" Silk 511
R. Langhans 513
Work of E. Crumière 514
Ernst Freidrich 515
Animal Silk 516
Vandura Silk 517
Bichromate Silk 518
Casein Silk 518
Incandescent Electric-Light Filaments 520
Artificial Horsehair, Gorse, Whalebone, Hemp, Lint 521
Spinning Artificial Filaments 526
Comparison of Yarn Sizes 542
Dyeing of Artificial Fibers 543
Properties of the Artificial Filaments 549

PAGE
Polarized Light 551
Tenacity and Durability 552
Moisture 555
The Specific Gravity 556
Chemical Properties of the Artificial Fibers 557
Uses of Artificial Silk 561
The World's Output of Artificial Silk 562

CHAPTER XIV

Celluloid and the Pyroxylin Plastics

Parkesine and Alexander Parkes ... 568
Daniel Spill and Xylonite 571
Zylonite in the United States 572
Pyroxylin Plastic Development in Europe 573
Development of Plastics in the United States 574
The Hyatt Brothers and Celluloid .. 576
Pasbosene, Cellonite, and Pyralin .. 580
The Hyatt Pyroxylin Plastic Process 580
The Manufacture of Pyroxylin Plastics 582
Bleaching the Nitrated Paper 584
Pulping or Beating the Pyroxylin .. 585
Introduction of Coloring Matter 585
Preparation of the Camphor 586
Mixing Pyroxylin and Camphor 587
Introduction of Stabilizing Agents .. 595
The Stabilizing of Pyroxylin Plastics 595
Urea as an Antacid 596
Dehydration of the Pyroxylin Pulp. 599
Solvent Recovery 605
Conversion of Pyroxylin into Plastic 606
Seasoning Crude Pyroxylin Plastic .. 611
The McCaine Method of Seasoning Celluloid 613
The Horace Miller Method of Celluloid Manufacture 614
Denitration of Celluloid 622
Pyroxylin Plastic Manufacture According to Tribouillet & Besancele 622
The Stain's Company Method of Celluloid Manufacture 623
Plastic Manufacture by Intense Cold 623
Uninflammable Pyroxylin Plastics . 624
Formation of Plastic Rods and Tubes 630
Manufacture of Hollow Articles from Pyroxylin Plastics 642
Lining Hollow Articles with Celluloid 645
Forming Celluloid Open-Seam Coverings 646
Formation of Celluloid Martingale and Similar Rings 647
Coating Articles with Celluloid 650
Molding Pyroxylin Plastic Objects .. 660
Forming Pyroxylin Plastics into Sheets 668
J. Edson's Method 670
Veneering with Pyroxylin 673
Stained Celluloid Sheets as a Substitute for Glass 675
Celluloid Sheets for Balloons 676
Polishing Celluloid Sheets 676
Embossing Celluloid 678
Dyeing Celluloid 679
Haskell's Finishing Process 681
Factitious Ivory 682
Artificial Horn 687
Tortoise Shell Imitations 689
Imitation Pearl 690
Artificial Coral 690
Imitation Amber 691
Imitation Marble 691
Imitation Onyx 693
Imitation Mosaic 695
Imitation Cloisonné and Champlevé Enamel 697
Metallic Incrustations 698
Inlaying Celluloid with Pigment Colors 698
The Manufacture of Plastic Collars and Cuffs 699
The Manufacture of Pyroxylin Plastic Combs 711
Mounting Stones in Celluloid 715
Manufacture of Brushes 715
Celluloid Mirrors and Mirror Backs . 718
Depositing Metallic Gold and Silver on Celluloid 719
Dental Plates and Clichés 719
Pyroxylin Plastic in Surgery 721
Celluloid Boxes 723
Golf Balls of Celluloid 724

PAGE
Celluloid Billiard Balls..... 726
Celluloid Stays..... 727
Celluloid Trays and Dishes..... 727
Manufacture of Celluloid Dolls..... 728
Manufacture of Syringes from Celluloid..... 729
Celluloid Emery Grinding Wheels..... 730
Celluloid Linings for Ice Pitchers... 730
Celluloid-Coated Piano Keys..... 731
Pyroxylin Plastic Moldings..... 731
Colored Celluloid Screens for Photography..... 732
Celluloid Playing Cards..... 732
Celluloid in Optics..... 733
Celluloid Phonograph Cylinders..... 733
Celluloid Eyelets..... 735
Ebony Plastic Masses..... 736
Celluloid Cements and Adhesives... 736
Celluloid Pens..... 737
Celluloid Penholders..... 737
Ink for Writing on Celluloid..... 740
Printing on Celluloid..... 741
Printing in Colors..... 744
Factitious Lithographic Stone..... 745
Celluloid Printing Blocks..... 747
Pyroxylin Labels..... 747
Commercial Names of Pyroxylin Plastics..... 748
Pegamoid..... 750
Properties of the Pyroxylin Plastics. 751
Celluloid Substitute according to J. Thornton and C. Seymour.... 756
Celluloid Substitute of H. Assadas.. 757
Formaldehyde-Phenol Celluloid Substitutes, Bakelite and Resinit.... 758
Formol-Albumen Celluloid..... 761
Streubel's Vegetalin..... 761
A. Chanard's Celluloid Substitute.. 762
R. Ortmann's Celluloid..... 762
Imitation Celluloid according to C. Hellriegel..... 762
"Improved" Celluloid of Tessier and Magnier..... 763
Casein Plastics..... 763
Analysis of Celluloid..... 765
Determination of Nitrogen and Cellulose Nitrate..... 767
Determination of Camphor..... 768
Determination of Temperature of Ignition..... 770
PAGE
United States Patents Relating to Pyroxylin Plastics..... 773
English Patents Relating to Pyroxylin Plastics..... 782

CHAPTER XV

Celloidin and the Cellulose Nitrates in Microscopy

Celloidin..... 794
Photoxylin..... 795
Preparation of the Object..... 796
The Celloidin Bath..... 796
Embedding..... 797
Orientation..... 799
Hardening the Celloidin..... 799
Cutting..... 801
Clearing and Mounting..... 802
The "Newer" Celloidin Method.... 803
Gilson's Rapid Process..... 804
Celloidin-Paraffin Embedding Method..... 805
Serial Sections by the Celloidin Method..... 806
Collodionization of Sections..... 808
Celloidin Injection Mass..... 809
Celloidin or Collodion Sacs..... 810
Physical Properties of Collodion Membranes..... 812

CHAPTER XVI

Collodion and the Cellulose Nitrates in Pharmacy and Medicine

The Pharmacopœal Collodions..... 816
Collodium Cantharidatum..... 816
Iodoform Collodion..... 819
Salicylated Collodion..... 820
Collodion Stypticum..... 820
Method of Preparing Collodion by U. S. Pharmacopœia VIII..... 820
Official Method of Pyroxylin Manufacture..... 821
National Formulary Collodions.... 823
Proprietary Collodions..... 823
Uses..... 824
Analytical..... 825

CHAPTER XVII

The Cellulose Nitrates in Photography. Emulsions, Films, and Processes

PAGE
Historical ... 828
Collodion Emulsion ... 829
Printing-out Silver Emulsion ... 833
Collodion Emulsion without Color or Alkaloidal Sensitizers ... 833
Collodio-Chloride Process ... 836
Collodion Dry Plates for Acid and Alkaline Development ... 838
Manufacture of Collodion Photographic Films ... 839
Film Negatives ... 841
Stripping Collodion Negatives ... 845
Continuous Photographic Films ... 845
Drying Continuous Films ... 863
Sensitizing Continuous Films ... 866
Chronophotography, Motography ... 866
Lantern Slides, Opals, and Transparencies ... 869
Ferrotypes and Direct Positives on Glass ... 873
Photographing on Wood ... 876
Isochromatic Collodion Emulsion ... 877
Collodion in Color Photography ... 878
Collodion Color Screens for Photography ... 880
The Collodio-Albumen Process ... 884
Silver Phosphate Emulsions ... 885
Reproduction of Images on Glass, Ceramic, or other Surfaces by Collodion ... 885
Line Production and Half-Tone Work ... 887
Collodion in the Manufacture of Balloons ... 890
Inflammability of Photographic Films ... 891
Photographic Lacquers and Pyroxylin Formulas ... 892
Physical Testing of Collodion Films ... 894
The Chemical Examination of Photographic Films ... 897

CHAPTER XVIII

Guncotton, Smokeless Powder and the Explosive Cellulose Nitrates

Gunpowder ... 898
PAGE
Smokeless Powders ... 899
Cellulose Nitrate Smokeless Powders 899
Manufacture of Pyrocollodion Smokeless Powder in the United States ... 902
Solvent Displacement Dehydration with Alcohol ... 903
Colloiding the Nitrocellulose ... 906
Pressing the Colloid into a Solid Cylinder ... 911
Marcaroni Filtering Press ... 913
Formation of Colloid into Strips or Rods ... 915
Smokeless Powder Cutter ... 921
Preliminary Solvent Recovery ... 922
Final Drying of the Powder ... 923
Glazing ... 925
Blending ... 925
Ballistite ... 926
Cordite ... 928
Moddite ... 937
Axite ... 937
U. S. Army Powder Factory ... 937
Indian Head Powder Factory ... 938
Maximite ... 939
Maxim-Schüpphaus Powder ... 940
Bernadou Powder ... 941
Explosive D ... 941
Bulk and Condensed Powder ... 941
Sporting Powder ... 944
Guncotton Dynamite ... 945
Blasting Gelatin and Gelatin Dynamite ... 946
Nitrated Guncotton ... 950
du Pont Powders ... 951
du Pont 1909 Military ... 952
W. A. .30-cal. Powders ... 952
.30 -cal. U. S. Army Rifle Powder 953
Bullseye Powder ... 953
Lightning Powder ... 953
Sharpshooter and Unique Powder 953
Marksman Powder ... 954
du Pont No. 1 Rifle Smokeless Powder ... 954
Schuetzen Rifle Powder ... 954
Infallible Smokeless Powder ... 955
Ballistite Smokeless Shotgun Powder ... 955
du Pont Smokeless Powder ... 955
Hazard Shotgun Smokeless Powder 955

PAGE
E. C. Improved Shotgun Smokeless Powder 955
New Schultze Powder 956
Empire Smokeless Shotgun Powder 956
King's Semi-Smokeless Powder 956
Lesmok Powder 957
The Gentieu and Waddell Method of Smokeless Powder Manufacture 957
Amberite 959
Smokeless Diamond Powder 960
Rifleite Powder 960
J. B. Powder 960
Tonite 961
Saxonite 961
Oarite 962
Henrite 962
French Powders 962
Walsrode Powders 963
Troisdorf Powder 963
Wetteren Powder 963
Von Förster Powder 964
Cibalite 964
Mullerite No. 1 and 2 964
Cooppal Powders 964
Matagnite 964
" Normal " Smokeless Powder 964
Japanese Smokeless Powder 965
Guncotton Blocks 965
Nitrocotton and Picric Acid 967
Flash-light Composition 968
Stability Tests 968
The Vieille Test 969
U. S. Ordnance Methods of Testing 969
Ordnance Department 115° Test ... 973
Explosion Test 973
Will's Stability Test 974
The Guttmann Stability Test 976
Bergmann and Junk Test 977
Waltham Abbey Silvered Vessel Test 978
The Abel Heat Test 979
The Firing Point of Explosives 982
Testing Explosive Gelatin, Gelatin Dynamite, etc. 983
Liquefaction Test of Explosive Gelatin 984
Exudation Test 984

CHAPTER XIX

Cellulose Acetates

PAGE
Historical 985
Chemistry 988
Methods of Manufacture 991
Manufacture with Dehydrating Agents 992
Formation of Cellulose Acetates from Regenerated Cellulose 1000
Purification 1002
Cellulose Tetracetate 1003
Cellulose Formate 1004
Cellulose Propionate 1006
Starch Acetate, Starch Formate .. 1007
Cellulose Acetate Plastics 1010
Cellit 1016
Sericose 1022
Dyeing 1023
Acetate Lacquers 1027
Acetate Bronzing Liquids 1028
Cellestron Silk and Artificial Filaments from Cellulose Acetate .. 1032
Solidified Spirit, Smaragdin 1035
Analytical 1036

CHAPTER XX

Viscose and the Cellulose Xanthates

Historical 1055
Alkali-Cellulose 1057
Thiocarbonates and Xanthates 1058
Cellulose Xanthate 1059
Maturing or Aging the Viscose 1061
Precipitating or Fixing the Viscose 1062
Transformation of Coagulated Viscose into Cellulose 1066
Purification of Viscose 1066
M. Waddell's Method of Viscose Formation 1070
Filtration of Viscose Solutions 1072
Removal of Air from Viscose Solutions 1075
Properties of Viscose Solutions ... 1076
Storing Alkali-Cellulose and Viscose 1077
Artificial Filaments from Viscose .. 1077
Artificial Viscose Filaments According to Stearn 1087
Viscelline and Licella Yarn 1089
Bleaching of Viscose Silk 1090

PAGE
Dyeing of Viscose 1091
Preparation of Viscose in the Form of a Dry Powder..... 1091
Viscose in Sheets..... 1092
Viscose Films..... 1093
Manufacture of Photographic Films from Viscose..... 1093
Viscoid Masses..... 1096
Manufacture of Hollow Articles from Viscose 1099
Electric Lamp Filaments from Viscose..... 1099
Sizing Paper with Viscose..... 1099
Viscose as a Paint Material..... 1103
Artificial Leather from Viscose.... 1103
Viscose for Wall Paper..... 1106
Cellulose Xanthate as Substitute for Wood and Horn..... 1107
Viscose in Cloth Printing..... 1107
Fixing Viscose on Textiles..... 1108
Starch Xanthate..... 1111
Cellulose Nitrites 1111
Quantitative Determination of Xanthates..... 1112

CHAPTER XXI

Denatured Ethyl Alcohol

Denaturing Agents—Completely Denatured Alcohol..... 1114
Methyl Alcohol..... 1115
Benzine..... 1116
Pyridin Bases..... 1117
Denaturants Deposited in Warehouse..... 1117
Manner of Handling and Testing Samples of Denaturants..... 1118
How Denatured Alcohol Shall be Gauged 1118
Survey of Distilleries..... 1119
Distilleries to be Divided into Two Classes..... 1121
Kind of Spirits that Can be Manufactured..... 1121
Denaturing Material to be Tested and Handled Same as at Denaturing Bonded Warehouses .. 1121
How Alcohol Must be Weighed.... 1122
How Gallons May be Determined. 1122
Completely Denatured Alcohol. . 1123
Denatured Alcohol not to be Stored on Certain Premises, nor Used for Certain Purposes..... 1123
Denatured Alcohol not to be Used as Component Part of Beverages or Medicinal Preparations..... 1123
Permits Required 1124
Permits in Force until Canceled . 1124
Consumer to Obtain Permit 1124
Denatured Alcohol not to be Delivered unless Consumer Has Permit..... 1125
Mixing Denatured Alcohol..... 1125
Manner in which Denatured Alcohol Can be Retailed 1126
Manufacturers Using Completely Denatured Alcohol to Secure Permit 1126
Manufacturer to Send Notice to Consumer..... 1127
Denatured Alcohol to be Kept in Room Set Aside for that Purpose..... 1127
Manufacturer's Application for Permit..... 1127
Formula for Special Denaturants to be Submitted to the Commissioner 1128
Application for Permit to Use Special Denaturants 1130
Storeroom to be Set Aside. How Constructed..... 1131
Specially Denatured Alcohol Storage Tanks 1131
Alcohol to be Used as Received .. 1132
Provisions Applicable to Manufacturers Using Either Specially or Completely Denatured Alcohol. 1132
Alcohol to be Restored on Premises where Used or in a Restoring Plant..... 1133
Still May be Used 1133
Application to be Filed 1133
Alcohol to be Stored in Storeroom as Recovered 1133
Manufacturer to Keep Record and Send Notice of Shipments 1134
Notice to be Sent to Collector . . 1134
Recovered Alcohol May be Col-

PAGE
lected in Receiving Tanks Outside of Storeroom 1135
Tanks to be Used for Receiving Recovered Alcohol and for Storing Recovered and Restored Alcohol 1135
Recovered and Restored Alcohol to be Gauged by Weight 1135
Metal Pipes to be Used in Transferring Restored and Recovered Alcohol 1135
Use of Restored Alcohol or Storage Tanks to Redenature Alcohol .. 1136
Reuse of Denatured Alcohol Recovered in Original Denatured State 1136
Records and Tanks 1137
Redenaturation 1137
Official Inspection, Samples, etc ... 1138
Application to Have Alcohol Restored and Denatured 1138
Restoring, Redenaturing and Gauging Alcohol 1138
PAGE
Alcohol not to be Redenatured Unless Necessary 1139
Special Denaturants 1139
Denaturants Authorized in Various Industries 1141

CHAPTER XXII

Appendix

Transportation of Explosives and Inflammable Materials 1142
Transportation of Smokeless Powder for Cannon and Sma'l Arms 1143
Flash Point of Inflammable Liquids 1144
Inflammable Liquids, Placarding for Transportation 1145
Tables 1146
Errata 1148
Index of Patents 1149
Name Index 1165
Subject Index 1187

LIST OF ILLUSTRATIONS

FIGURE PAGE

Christian Frederick Schönbein ..... *Frontispiece*
1. Cotton Fiber (Magnified) 15
2. Cochius Viscosometer 64
3. Lunge Two-Bulb Nitrometer 65
4. Lunge Gas-Volumeter 67
5. The Davis & Furber Mixing Picker for Cotton 79
6. The Cogswell Mill for Picking Cotton 80
7. Selwig & Lange Nitrating Centrifugal, with "Acid Circulation" (Side View) 92
8. Selwig & and Lange Nitrating Centrifugal, with "Acid Circluation" (Top View) 92
9. Wolfshohl Automatic Cotton Steeping Appliance for Nitration 94
10. Thompson Displacement Apparatus for Cotton Nitration (Sectional Elevation) 96
11. Thompson Displacement Apparatus for Cotton Nitration 97
12. Thomson Displacement Process at Picatinny, N. J. 98
13. Selwig & Lange Guncotton Conveyor 103
14, 15. Schüpphaus & White Method of Paper Nitration 105
16, 17. Mowbray's Paper Nitrating Apparatus 106
18. The Tribouillet and Besancle Nitrating Apparatus 107
19. Hyatt Tissue Paper Nitrator. Top View of Disintegrating Apparatus. ... 110
20. Hyatt Tissue Paper Nitrator. Vertical Longitudinal Section. Fig. 19 ... 110
21. Hyatt Tissue Paper Nitrating Apparatus. Plan View Showing Convertors 111
22. Hyatt Tissue Paper Nitrator. Side View of Fig. 21 111
23, 24. Currier Pulper and Refining Engine 122
25, 26. Nitrating Acid Storage Tanks 122
27. Selwig & Lange Centrifugal Pyroxylin Dehydrator 126
28. Tolhurst Hydro-Extractor Arranged with Bottom Discharge 127
29. Sectional View of Fig. 28 128
30. Currier Two-Plunger Hydraulic Dehydrator 129
31. Emil Passburg Patent Drying Chamber (J. P. Devine, Buffalo, N. Y.) ... 132
32. Passburg Safety Vacuum Drying Apparatus for Fulminates and Nitrocellulose 133
33, 34. Fairbank's Scale for Weighing Nitrating Acid 136
35. Chart *A* for the Redpath Graphic Method of Nitrating Acid Calculation .. 140
36. Chart *B* for the Redpath Graphic Method of Nitrating Acid Calculation .. 141
37. Fusel Oil Rectifying Still. (Vulcan Copper Works Design) 202
38. The Wöllbrink Benzine Purifier 205
39. Volumetric Flask 209
40. Three Bulb Ladenburg Fractionation Flask 209
41. U. S. Government Fusel Oil Tester 209
42. John Henry Stevens ..... *Facing Page* 213
43. Spirit Rectifying Apparatus for the Recovery of Lower Alcohols and Acetates from Aqueous Solutions as designed by the Vulcan Copper Works, Cincinnati, Ohio 222
44. The Commercial Manufacture of Amyl Acetate 225
45. The Wilson Mechanical Finish Remover 270

FIGURE PAGE
46. The Coles Shaker ... 276
47. Dudley Shaking Arrangement for Four Solutions ... 276
48. The Rabe Shaker ... 276
49. The Wagner Continuous Shaker with Power Attachment ... 277
50. The J. H. Day Co. Jar Mill or Triturator ... 277
51. Urinary Centrifuge Useful for Quickly Clarifying Pyroxylin Solutions ... 278
52. Wegelin & Hubner Experimental Filter Press ... 279
53. Pump for Emptying Barrels and Drums of Solvent ... 279
54. The Day Pyroxylin Mixer for Thin Solutions ... 280
55, 56. Pyroxylin Mixers in Group of Two ... 281
57. The Day Paragon Liquid Mixer ... 281
58. The Kent Mixer in Series for Heavy Solutions (Kent Machine Works, Brooklyn, N. Y.) ... 281
59. The Day Heavy Mixer with Gate ... 282
60. The J. H. Day Dough Mixer for Heavy Pyroxylin Solutions ... 282
61. Kent Cracking Mill for Grinding Resins ... 283
62. Kent Cracking Mill. (Opened.) ... 283
63. Day's Revolving Varnish and Shellac Cutter and Mixer ... 284
64. Harris Paint Mill No. 3 (J. H. Day Co.) ... 284
65. The Harris Improved Mill ... 285
66. Kent Machine Co. Double Automatic Pigment Grinder ... 286
67. Open Head Barrels for Heavy Mixtures ... 287
68. Tank for the Storage of Lacquers ... 289
69. The Stebbins Faucet for Volatile Liquids ... 289
70. The Combination Shut-off Faucet and Gate ... 289
71. The T. Shriver Plate Filter Press (Harrison, N. J.) ... 290
72. The De Laval Centrifugal Varnish Filter ... 291
73. Sectional View of Filtering Chamber of the DeLaval Centrifugal Filter ... 292
74. Upright Glass-Lined Steel Tank for Lacquer Storage (Pfaudler Type) ... 293
75. Glass-Lined Steel Tank for the Storage of Cellulose Nitrate Solutions (Pfaudler Co. Rochester, N. Y.) ... 293
76. The Paneled Lacquer Shipment Can ... 294
77. Evenden's Patent Jacket Can ... 294
78. Tin Cup to Cover Varnish Can Nozzle after Opening ... 295
79. Varnish Can Sealer Used for Crimping Metal Caps ... 295
80. Varnish Can Cap or Seal ... 295
81. The Martini Process for Storing Inflammable Solutions ... 296
82. Crane's Method for Lacquering with Pyroxylin ... 319
83. Lacquering Small Objects with Pyroxylin ... 319
84. The Bachia Lacquer Brush Holder ... 337
85. A Roller Lacquering Machine ... 341
86. The Lübbertsmeier Continuous Lacquering Machine ... 341
87. The Kramer Method of Lacquering the Interiors of Cans and Casks ... 341
88. The Hammond Method of Lacquering Golf Balls ... 350
89. Lacquering Golf Balls According to Armitage ... 350
90. The Page Method of Lacquering Golf Balls ... 350
91. The Moliter Mechanical Painting Device ... 351
92. Drying Incandescent Mantles after Being Shrunk on the Models ... 353
93. Cutting the Mantles into Proper Length before Shrinking the Fabric ... 354
94. Apparatus for Immersing the Mantles in the Pyroxylin Solution ... 355
95. Forming the Fabric for the Mantles ... 356
96. Color Mixers with Stirrers ... 371
97. The Croplin & Crowe Color Strainer ... 372
98. The H. W. Butterworth Dyeing Jigger ... 372
99. The H. W. Butterworth Cloth Squeezer ... 373
100. 20-Cylinder Upright Drying Machine. (H. W. Butterworth & Sons Co.) ... 374
102. The Curtis & Marble Calendar Rolling Machine with Adjustable Measuring Attachment ... 375
103. Counting Register for Measuring Cloth ... 375
104. The Curtis & Marble Cloth Winder and Measurer ... 376
105. Cloth Inspecting Machine with Reverse-Motion and Rolling Head ... 376
106. The Heath Patent Vertical Brusher ... 377

FIGURE PAGE
107. Railway Sewing and Rolling Machine (Curtis & Marble Co.) 377
108. Portable Hand Power Railway Sewing Machine (Curtis & Marble Co.) ... 378
109. Belt Power Railway Sewing Machine (Curtis & Marble Co.) 378
110, 111, 112, 113. The Cyrus Currier Pyroxylin Coating Machine ... 382, 384, 386
114. The Farrel Standard Three-Roll Calender 390
115. The Cyrus Currier & Sons' Three-Roll Embossing Machines 391
116. The Geo. H. Ohl Plate Embossing Press 391
117. The Currier Steel Embossing Press 392
118. The Love Polishing Hand Glove 397
119. Waterproof Cloth According to A. Kennedy 418
120. Conversion of Collodion into Artificial Silk. (From Sci. Amer. Suppl. No. 1156, p. 18470.) 462
121. De Chardonnet Apparatus for Making Artificial Silk. (Transverse Section) 463
122. De Chardonnet Apparatus for Making Artificial Silk. (Front Elevation.) 463
123. De Chardonnet Apparatus for Making Artificial Silk, showing the Spinning Devices 464
124. The De Chardonnet Apparatus for Making Artificial Silk 465
125. De Chardonnet Spinning Devices. (Side Elevation.) 465
126. De Chardonnet Apparatus for Making Artificial Silk 466
127, 128. Improved Chardonnet Process for Artificial Silk Manufacture 467
129, 130. Improved Chardonnet Process for Artificial Silk Manufacture 468
131. The Lehner Process for Making Artificial Silk 472
132. The Lehner Apparatus for Making Artificial Silk 475
133. The Lehner Apparatus for Making Artificial Silk 476
134. The Crespin Process of Making Artificial Silk 481
135. The Denis Machine for Producing Threads from Collodion and Recovering the Solvents of Nitrocellulose or Cellulose 483
136. The Denis Machine for Producing Threads from Collodion 483
137. Washing Artificial Filaments According to Fremery and Urban 514
138. Linkmeyer Process for Manufacturing Glossy Cellulose Threads 510
139. The Thiele Artificial Silk Spinning Apparatus 510
140. The Thiele Spinning Apparatus, Showing the Method of Winding the Filaments 512
141. The Ratignier and Pervilhac Artificial Lace Machine 524
142. The Lumière Spinning Mechanism 527
143. Method of Hardening Artificial Filaments According to Crombie 529
144. The Waddell Apparatus for Forming Filaments 533
145. The Waddell Apparatus for Forming Filaments 534
146. The Waddell Apparatus for Forming Filaments 535
147. The Strehlenert Method of Spinning and Twisting Artificial Fibrous Material 538
148. The Friedrich Spinning Apparatus 541
John Wesley Hyatt ..... *Frontispiece to Vol. II*
149. Cylinder Paper Making Machine 589
150. The Schmerber and Arrault Plastic Grinder and Mixer 590
151. Combining Pyroxylin with Camphor 591
152. The Hyatt & Everding Process for Making Solid Pyroxylin Compounds ... 592
153. The Hyatt Pyroxylin Plastic Mixer 593
154. The Hyatt Method of Combining Pyroxylin and Its Solvents 594
155. The Hyatt Hydraulic Pyroxylin Press 600
156. The Hyatt, Wood & Stevens Pyroxylin Pulp Desiccator 600
157. The Hyatt, Wood & Stevens Pyroxylin Pulp Desiccator 601
158. The Hyatt, Wood & Stevens Pyroxylin Pulp Desiccator 602
159. Apparatus for the Manufacture of Celluloid According to France 603
160. Pyroxylin Plastic Masticating Machine 608
161. The Miller Apparatus for Drying Pyroxylin Plastics 609
162. The Miller Apparatus for Drying Pyroxylin Plastics 610
163. The Edson Method of Drying Celluloid 612
164. Celluloid Manufacture According to Miller 615
165. Celluloid Manufacture According to Miller 616
166. Celluloid Manufacture According to Miller 617

FIGURE PAGE
167. Celluloid Manufacture According to Miller 618
168. The Monroe Process for Utilizing Celluloid Scrap 618
169. The Kitsee Distillation Method of Celluloid Scrap Recovery 619
170. The Garbin Apparatus for Utilizing the Waste of Celluloid 620
171. The Garbin Apparatus for Utilizing the Waste of Celluloid 621
172. The Hyatt Apparatus for Manufacturing Pyroxylin 631
173. Hyatt's Apparatus for Manufacturing Pyroxylin 632
174. The Carpenter Apparatus for Molding Hollow Celluloid Forms 634
175. Hyatt's Apparatus for Manufacturing Pyroxylin 634
176. The Edson Method for Making Celluloid Rods and Tubes 635
177. The Olszewski Machine for the Rapid Conversion of Celluloid 636
178. The Olszewski Apparatus for Producing Plastic Rods and Tubes 637
179. The Olszewski Apparatus for Producing Plastic Rods and Tubes 638
180. The Olszewski Apparatus for Producing Plastic Rods and Tubes 638
181. The Gilmore Stuffing Machine for Manufacturing Pyroxylin Rods and Tubes 639
182. Stuffing Machine for Manufacturing Pyroxylin Rods and Tubes, According to Gillmore 639
183. The Gillmore Stuffing Machine for Manufacturing Pyroxylin Rods and Tubes 640
184. Producing Hollow Celluloid Articles, According to Hyatt 641
185, 186. Manufacturing Hollow Pyroxylin Articles. (Ward's Process) 643
187. The Lefferts Process for Lining Hollow Articles with Celluloid 645
188. Forming Celluloid Open Seam Coverings 647
189. Forming Solid Celluloid Rings, According to Lockwood 648
190. Forming Solid Celluloid Rings, According to Lockwood 649
191. The Kipper Process for Making Solid Pyroxylin Rings 649
192. Coating Articles with Celluloid According to Hyatt 650
193. The Hyatt and Burroughs Apparatus for Coating Bars on Springs with Celluloid 651
194. The Hyatt and Burroughs Apparatus for Coating Bars or Springs with Celluloid 652
195. Hyatt's Method for Coating Picture Moldings 653
196. The Hyatt Press for Coating Articles with Celluloid 654
197. The Hyatt Press for Coating Articles with Celluloid 655
198. The Hyatt Press for Coating with Celluloid 656
199. Kipper's Process for Coating Handles with Pyroxylin 657
200. Coating Handles with Pyroxylin According to France 658
201. Manufacturing Pyroxylin Handles According to France 658
202. Thurber's Apparatus for Forming Pyroxylin Articles 659
203. Thurber's Apparatus for Forming Hollow Pyroxylin Articles 659
204. Hyatt's Method of Solvent Expulsion 661
205. The Hunt Apparatus for Softening and Molding Celluloid 662
206. Manufacture of Celluloid Collar and Cuff Buttons (Horace Miller's Patent) 662
207. Lockwood's Method of Manufacturing Celluloid-Coated Articles 663
208. Manufacturing Celluloid-Coated Articles by the Davis Patents 663
209. The Furman Method of Molding Mouthpieces for Whistles, etc., of Celluloid 664
210. Molding Hollow Celluloid Articles According to Furman's Method 665
211. Molding Small Celluloid Articles 665
212. The Miller Machine for Molding Pyroxylin Plastics 666
213. The Miller Machine for Molding Pyroxylin Plastic Articles 667
214. The Miller Machine for Molding Pyroxylin Plastic Articles 667
215. The Edson Apparatus for Forming Thin Plastic Sheets 671
216. Edson's Apparatus for Forming Very Thin Pyroxylin Sheets 672
217. Veneering with Pyroxylin According to McClelland 674
218. Polishing Sheets of Pyroxylin Material. (Schmidt's Patent.) 677
219. The Edson Process for Polishing Sheets of Pyroxylin Plastic 678
220. The Haskell Finishing Process 681
221. Manufacturing Celluloid Articles, According to the Method of Chickering . 684
222. The Kipper Method of Forming Solid Celluloid Rings 686
223. The Harvey Process for Producing Artificial Horn from Celluloid 688

FIGURE PAGE
224. Manufacture of Pyroxylin Compounds in Imitation of Marble ... 692
225. Showing Method of Matching Mottled Celluloid Sheets (A) in Imitation of Marble and Onyx ... 693
226. The Stevens and Harrison Process for Producing Imitation Onyx from Pyroxylin Plastics ... 694
227. The Stevens and Harrison Process for Producing Imitation Onyx from Pyroxylin Plastics ... 695
228. The Harrison and Thurber Method of Producing Pyroxylin Imitations of Mosaic ... 696
229. Pyroxylin Imitation of Mosaic According to France ... 696
230. Sanborn's Method of Forming Celluloid Collars and Cuffs ... 701
231. The Cary Machine for Creasing, Bending and Shaping Celluloid Collars ... 702
232. The Kipper Celluloid Collar and Cuff ... 703
233. The Jarvis Celluloid Collar or Cuff ... 703
234. The Hyatt Non-Rattling Celluloid Cuff ... 705
235. The Kipper Celluloid Collar or Cuff ... 706
236. Waterproof Collar, According to France ... 706
237. The Kipper Reversible Celluloid Collar or Cuff ... 708
238. Celluloid Comb Manufacture ... 712
239. Celluloid Comb Manufacture, According to Hyatt ... 712
240. Celluloid Comb Manufacture, According to Hyatt ... 713
241. Hyatt's Process for Manufacturing Celluloid Combs ... 713
242. Manufacture of Celluolid Articles. (Hackenberg's Patent.) ... 714
243. Mounting Stones in Celluloid ... 715
244. Manufacture of Celluloid Brushes ... 716
245. The Miller Method of Celluloid Tooth Brush Manufacture ... 716
246. The Miller Celluloid Brush ... 717
247. The Hafely Method of Making Celluloid Boxes ... 724
248. The Stevens & Thurber Process for Making Celluloid Golf Balls ... 725
249. The Hyatt "Gun Method" of Celluloid Billiard Ball Manufacture ... 726
250. Forming Celluloid Articles. (The Thurber & Schaefer Process.) ... 728
251. The Carpenter Process of Necking Celluloid Tubes ... 728
252. Celluloid Syringes According to Lefferts ... 729
253. Lefferts' Method of Celluloid Lining of Ice Pitchers and Vessels of a Similar Nature ... 730
254. Making Celluloid Piano Keys ... 731
255. Manufacture of Celluloid Moldings ... 731
256. Carpenter's Process of Reducing Celluloid Tubes to Taper ... 738
257. Molding Hollow Articles from Celluloid. (Furman's Patent.) ... 739
258. Process of Making Pyroxylin Labels According to Lansing ... 748
260. The Todd Process of Forming Films ... 841
261, 262. The Reichenbach Method of Manufacturing Flexible Photographic Films ... 847
263. The Reichenbach Method of Manufacturing Flexible Photographic Films ... 848
264. The Reichenbach Apparatus for Manufacturing Photographic Films ... 849
265. The Reichenbach Apparatus for Manufacturing Photographic Films ... 850
266. Pyroxylin Coating of Paper. (Reichenbach) ... 851
267. The Stevens & Lefferts Apparatus for Producing Pyroxylin Sheets ... 853
268. The Stevens & Lefferts Apparatus for Producing Pyroxylin Sheets ... 854
269. Process of Making Nitrocellulose Sheets. (F. A. Anthony.) ... 856
270. Process of Making Nitrocellulose Sheets. (F. A. Anthony.) ... 856
271. The Thornton Film Coating Machine ... 858
272. Coating Nitrocellulose Films. (Cossett's Method.) ... 860
273. The Thompson Film Drying Machine ... 864
274. The Thompson Film Drying Machine ... 865
275. The Thompson Film Drying Machine ... 865
276. Randall & Stickney Paper Gauge ... 894
277. The Mullen Film Tester ... 895
278. Running Pulped Nitrocellulose through the "Wet Machine" ... 904
279. Exposing Nitrocellulose to Dust and Dirt in Open Tubs ... 904
280. Pyroxylin Hydroextractor ... 905

FIGURE PAGE
281. A Block or "Cheese" of Nitrocotton as Taken from the Hydraulic Dehydration Press ... 905
282. Mastodon Mixer ... 907
283. Transferring the Colloided Pyrocollodion from Mechanical Mixer to Storage Cans ... 909
284. Hydraulic Pyrocollodion Blocking Press ... 909
285. Macaroni Hydraulic Filtering Press for Mixing and Straining Pyrocollodion ... 909
286. 287. Nitrocellulose Wash House ... 910
288. Hydraulic Filtering or "Macaroni" Press, for Removal of Solid Impurities from Colloided Nitrocellulose ... 911
289. Macaroni Press, Under Side, Showing Strings of Filtered Colloid ... 912
290. Hydraulic Pyrocollodion Blocking Press ... 912
291. Smokeless Powder Manufacture ... 913
292. Hydraulic Guncotton Press Valve, by Means of which the High and Low Pressures are Regulated ... 914
293. Formation of Smokeless Powder Grains ... 915
294. Formation of Smokeless Powder Grains for Small Arms ... 916
295. Finishing Press for Pyrocollodion Powder ... 917
296. Hydraulic Powder-forming Press Head ... 917
297. Section of Fig. 296 ... 918
298. End View of Hydraulic Finishing Press for Smokeless Powder Manufacture ... 918
299. Partly Consumed Grains of 12-in. Gun Smokeless Powder ... 919
300. Smokeless Powder of Various Forms and Sizes Designed for Different Calibers of Naval Guns ... 919
301. The du Pont Apparatus for the Manufacture of Explosive Powder in Strips ... 920
302. Smokeless Powder Cutter ... 921
303. The Nikolsky Apparatus for Distilling off and Recovering Solvent Used in Explosives ... 923
304. Smokeless Powder Grains Undergoing Solvent Expulsion in the Dry House ... 924
305. Pressing Cordite ... 928
306. Cordite Kneading Machine ... 930
307. Re-Reeling (Blending) of Cordite ... 931
308. A Rifle Cordite Press ... 932
309. Cordite Drying Room ... 933
310. The Gentieu and Waddell Process of Smokeless Powder Manufacture ... 958
311. Will's Apparatus for Testing Nitrocellulose as Modified by Roberts ... 975
312. French Viscose Purifier ... 1070
313. The Ernst and Hamlin Viscose Filter ... 1074
314. The Naudin Apparatus for Extracting Air and Carbon Bisulphide from Viscose Solutions ... 1075
315. The Ernst Method of Forming Viscose Filaments ... 1079
316, 317, 318, 319. The Waddell Apparatus for Forming Metamorphosed Cellulose Filaments ... 1083
320. The Waddell Filament Forming Apparatus ... 1084
321. The Delubac Viscose Thread Producing Apparatus ... 1086
322. The Delubac Viscose Thread Forming Apparatus ... 1086
333. Producing Cellulose Photographic Films According to Chorley ... 1094
324. The Stearn Filament Apparatus for Incandescent Electric Lamps ... 1100

ABBREVIATIONS

A.A.A.S.	American Association for the Advancement of Science
Anon.	Anonyme
A.O.A.C.	Association of Official Agricultural Chemists
abs.	absolute
Act.	Actien
alc.	alcohol ethyl
alk.	alkaline
amp.	ampere
amt.	amount
approx.	approximate
at.	atom, atomic
atm.	atmosphere(s)
atm. pr.	atmospheric pressure
as-	asymmetric
av.	average
b.	boil(s), boiling
b. pt.	boiling point
c.	asymmetric carbon atom
cal.	caloric
cc.	cubic centimeter
chem.	chemical
com.	commercial
comp.	composition
compd.	compound
conc.	concentrat-ed, ion
cor.	corrected
c.p.	candle power
crys.	crystals, crystallized
cu.m.	cubic meter
cwt.	hundredweight
d-	dextro
d.	density
dem.	decimeter
dil.	dilute
dr.	dram
fl.	fluid
f. pt.	freezing point
gal.	U. S. gallon, 3785 cc.
Ges.	Gesellschaft
gm.	gram (8)
gr.	grains
hr.	hour(s)
insol.	insoluble
in.	inch
k.	kilogram
kw.	kilowatt
l.	liter(s)
l-	laevo
lab.	laboratory
Ltd.	Limited
m.	meter
m-	meta
mfr.	manufacturer
mfg.	manufacturing
mgm.	milligram
min.	minute(s)
mm.	millimeter
mol.	molecule(s)
mol. wt.	molecular weight
m. pt.	melting point
nor.	normal
o-	ortho
ord.	ordinary
oz.	Avoirdupois ounce
p-	para
pp.	precipitate
pt.	pint
qt.	quart
quant.	quantitative
recryst.	recrystallized
sat.	saturate(d)
sc.	scruple
sec.	second(s)
soln.	solution
Soc.	Société
sp. gr.	specific gravity
sq.	square
sym-	symmetrical
temp.	temperature(s)
v-	vicinal
vac.	vacuum
vol.	volume(s)
wt.	weight
°	degrees Centigrade
%	percent by weight

ABBREVIATIONS OF REFERENCES TO LITERATURE

A.	The Analyst
Acad.	Mémoires de l'Académie des Sciences
Agr. J. India	Agricultural Journal of India
Alk.	Alkohol
Am. Annual Phot.	American Annual of Photography
Am. Brewers Rev.	American Brewers Review
Am. Apoth. Z.	Deutsch-Amerikanische Apotheker Zeitung
Am. Chem.	American Chemist
Am. Chem. J.	American Chemical Journal
Am. Drug.	American Druggist and Pharmaceutical Record
Am. Electrochem. Soc.	American Electrochemical Society
Am. Food J.	American Food Journal
Am. J. Med. Sci.	American Journal of the Medical Sciences
Am. J. Pharm.	American Journal of Pharmacy
Am. J. Physio.	American Journal of Physiology
Am. J. Sci.	American Journal of Science
Am. Mach.	American Mahcinist
Am. Mon. Mier. J.	American Monthly Microscopical Journal
Am. Nat.	American Naturalist
Anat. Anzeig.	Anatomische Anzeiger
Ann.	Liebig's Annalen der Chemie
Ann. Bot.	Annals of Botany
Ann. chim. anal.	Annales de chimie analytique
Ann. chim. farm.	Annali di chimica e de farmacologia
Ann. chim. phys.	Annales de chimie et de physique
Ann. inst. Pasteur	Annales de l'Institut Pasteur
Ann. m.	Annales des mines
Ann. Pharm.	Annales de Pharmacie, Louvain
Ann. Phil.	Annals of Philosophy
Ann. Physik.	Annalen der Physik
Ann. Surg.	Annals of Surgery
Apoth.	Apothecary, Boston
Apoth. Ztg.	Apotheker Zeitung
Arb. Kais. Gesundh.	Arbeiten aus dem Kaiserlichen Gesundheitsamte
Arch. Anat. Phys.	Archiv für Anatomie, Physiologie und Wissenschaftliche Medicin
Arch. belges de méd. mil.	Archives belges de médicine militaire
Arch. exp. Path. Pharm.	Archiv für experimentelle Pathologie und Pharmakologie
Arch. Hyg.	Archiv für Hygiene
Arch. internal Med.	Archives of Internal Medicine
Arch. méd. exper.	Archives de médicine experimentale
Arch. mikr. Anat. Entwick.	Archiv für mikroskopische Anatomie (Entwicklungsgeschichte)
Arch. Pharm.	Archiv. des Pharmazie

Arch. sci. phys. nat.	Archives des sciences physiques et naturelles
Arch. Zool. Exper.	Archives für Zoologie Experimentelle
Arms and Expl.	Arms and Explosives
Atelier Phot.	Atelier des Photographen
Atti. Istit. Bot. Univ. Pavia	
Aust. P.	Austrian Patent
Aust-Hung. P.	Austria-Hungary Patent
Baugew. Z.	Baugewerks-Zeitung
Beibl.	Beiblätter zurd. Annalen der Physik
Belg. P.	Belgian Patent
Ber.	Berichte der Deutschen chemischen Gesellschaft
Ber. botan. Ges.	Berichte der Deutschen botanischen Gesellschaft
Ber. pharm.	Berichte der Deutschen pharmazeutischen Gesellschaft
Ber. physik. Ges.	Berichte der Deutschen physikalischen Gesellschaft
Ber. klin. Wochenschr.	Berliner klinische Wochenschrift
Berz. Jahrsb.	Berzelius Jahresberichte
Biochem. Centr.	Biochemische Centralblatt, Leipzig
Biochem. J.	Biochemical Journal, Liverpool
Biochem. Zts.	Biochemische Zeitschrift
Biol. Centr.	Biologische Centralblatt
Biophys. Centr.	Biophysikalische Centralblatt, Leipzig
B. M. and S. J.	Boston Medical and Surgical Journal
Boll. chim. farm.	Bolletino chimico farmaceutico, Milan
Bot. Centr.	Botanische Centralblatt
Bot. Gaz.	Botanical Gazette
Brewers J. Lon.	Brewers Journal, London
Brewers, J. N. Y.	Brewers Journal, New York
Brit. Food J.	British Food Journal
Brit. J. Dent. Sci.	British Journal of Dental Science
Brit. J. Almanac	British Journal Almanac
Brit. J. Phot.	British Journal of Photography.
Brit. Med. J.	British Medical Journal
Bull. Acad. Med.	Bulletin of the Academy of Medicine
Bull. Am. Pharm. Assoc.	Bulletin of the American Pharmaceutical Association
Bull. assoc. chim. sucr. dist.	Bulletin de l'association des chimistes de sucrerie et de distillerie de France
Bull. Hyg. Lab. U.S.P.H. and M. H. Serv.	Bulletins of the Hygienic Laboratory, United States Public Health and Marine Hospital Service
Bull. Mulh.	Bulletin de la société industrielle de Mulhouse
Bull. Musée	Bulletin du Musée de l'industrielle de Belgique
Bull. Pharm.	Bulletin of Pharmacy
Bull. Pharm. du Sud-Est.	Bulletin de Pharmacie du sud-est, Montpelier
Bull. Rouen	Bulletin de la société industrielle de Rouen
Bull. soc. chim.	Bulletin de la société chimique de France
Bull. soc. chim. Belg.	Bulletin de la société chimique de Belgique
Bull. soc. d'Encouragement	Bulletin de la société d'Encouragement
Bull. soc. de med. de Gand.	Bulletin de la société de médecine de Gand
Bull. soc. franç. phot.	Bulletin de la société française de photographie
Bull. soc. pharm. Bord.	Bulletin de la société de pharmacie de Bordeaux
Bull. soc. roy. pharm.	Bulletin de la société royale de pharmacie de Bruxelles
Bull. soc. scient. med. Rennes.	Bulletin de la société scientifique et médicale de l'ouest, Rennes
Bull. Zool. France	Bulletin Zoologie France
C. A. (Chem. Abst.)	Chemical Abstracts
Can. Drug.	Canadian Druggist
Can. P.	Canadian Patent
Can. Pharm. J.	Canadian Pharmaceutical Journal
Can. Pat. Off. Rec.	Canadian Patent Office Record
Caout. and Gutta-p.	Caoutchouc and la Gutta-percha
Cellule	La cellule
Cell. Ind.	Die Celluloid Industrie
Centr. Allgm. Path. u. path. Anat.	Centralblatt für allgemeine Pathologie und pathologische Anatomie

Centr. Bakt.	Centralblatt fur Bakteriologie, Parasitenkunde und Infectionskrankheiten
Centr. Z.	Centralblatt fur die Zuckerindustrie
Chamb. Comm. J.	Chamber of Commerce Journal
Chem. Centr.	Chemische Centralblatt
Chem. Drug.	Chemist and Druggist, London
Chem. Drug. Aus.	Chemist and Druggist of Australasia
Chem. Eng.	Chemical Engineer
Chem. Gaz.	The Chemical Gazette
Chem. Ind.	Chemische Industrie
C. N.	Chemical News
C. R.	Comptes rendus hebdomadaires de séances de l'academie des sciences
C. R. soc. Biol.	Comptes rendus hebdomadiares de séances de la Société de biologie
Chem. Repert.	Chemische-Technische Repertorium
Chem. Rev. Fett-Harz-Ind.	Chemische Revue uber die Fett- und Harz-Industrie
Chem. Soc. Quart.	Chemical Society Quarterly
Chem. Tech.	Chemiker- und Techniker-Zeitung
Chem. Trade J.	Chemical Trade Journal and Chemical Engineer
Chem. Weekbl.	Chemisch Weekblad
Chem. Ztg.	Chemiker Zeitung
Chem. Zts.	Chemische Zeitschrift
Corresp. Zahn.	Correspondenzblatt für Zahnärzte
Crell. Ann.	Chemische Annalen für die Freunde der Naturlehre, etc.
Dent. Cos.	Dental Cosmos, Philadelphia
Deut. Arch. klin. Med.	Deutsches Archiv. fur Klinische Medizin
Deut. med. Wochenschr.	Deutsches medizinische Wochenschrift
Ding. Poly.	Dinglers Polytechnische Journal
D.R.P.	German Patent
Drug. Circ.	Druggist's Circular
D. Buchdr. Ztg.	Deutsche Buchdrueker-Zeitung
Dyer, Calico Ptr.	Dyer, Calico Printer, Bleacher, Finisher, & Textile Review
Edin. Med. J.	Edinburgh Medical Journal
Eisen Ztg. (Eisen Z.)	Eisen Zeitung
Elec. Rev.	Electrical Review
Electr.	The Electrician
Elec. World.	Electrical World
Electrochem. Met. Ind.	Electrochemical and Metallurgical Industry
Elektrochem. Zts.	Elektrochemische Zeitschrift
Elektrot. Zts.	Electrotechnische Zeitschrift
Eng. Digest	Engineering Digest
Engng.	Engineering
Eng. News	Engineering News
Eng. Rec.	Engineering Record, Building Record and Sanitary Engineer
Engl. Mech.	English Mechanic
E.P.	English (British) Patent
Essig-Ind.	Deutsche Essigindustrie
Färb. Ztg.	Deutsche Färber-Zeitung
Fortschr. Chem.	Fortschritte der Chemie, Physik und Physikalischen Chemie
Fortschr. Med.	Fortschritte der Medizin
F.P.	French Patent
Freie K.	Freie Künste
Gaz. del Cliniche	Gazzetta della Cliniche
Gaz. chim. ital.	Gazzetta chimica italiana
Gaz. med. Ital. lomb.	Gazzetta medica italiana lombardia, Milano
Gaz. med. de Pav.	Gazzetta medica di Pavia
Gew. Bl. Schw.	Schweizerisches Gerwerbeblatt
Gew. Bl. Würt	Gewerbeblatt aus Wurttemberg
Gew. Ztg.	Wieck's Gewerbezeitung

Glasgow Med. J.	Glasgow Medical Journal
Graph. Beob.	Graphischer Beobachter
Graph. Mitt.	Schweizer graphische Mitteilungen
Gummi-Ztg.	Gummi-Zeitung
Hann. W. Bl.	Hannöversches Gewerbeblatt
Hide & Lea.	Hide and Leather
Hung. P.	Hungarian Patent
Hutm. Ztg.	Deutsche Hutmacher-Zeitung
Impr.	L'imprimerie
Ind. chim.	Industria chimica
Ind. Text.	L'industrie textile
Indg. Ztg.	Deutsche Industrie Zeitung
Inv.	The Inventor's Record.
Inv. nouv. chim.	Les inventions nouvelles, Arts chimiques
Iron Age	Iron Age
It.P.	Italian Patent
J.A.C.S.	Journal American Chemical Society
J. Agr. Sci.	Journal of Agricultural Science
Jahrb. Phot.	Jahrbuch für Photographie und Reproduktiontechnik
Jahresb.	Philipp Röder, Vienna
Jahresb. Chem.	Jahresbericht der Chemie
Jahresb. d. Pharm.	Jahresbericht der Pharmacie
Jahresb. Phot.	Jahresbericht der Photographie
Jahresb. rein Chem.	Jahresbericht der rein Chemie
Jahresb. ü. Tier-Chem.	Jahresbericht über die Fortschritte der Tier-Chemie
J. Am. Lea. Chem. Assoc.	Journal of the American Leather Chemists' Association
J. Am. Med. Assoc.	Journal of the American Medical Association
J. Analyt. Chem.	Journal of Analytical Chemistry
J. Appl. Mier.	Journal of Applied Microscopy
Jap.P.	Japanese Patent
J. Biol. C.	Journal of Biological Chemistry
J. Buchdr.	Journal für Buchdruckerkunst
J. Cam. Club	Journal of the Camera Club
J. Chem. Met. Soc. S. Af.	Journal of the Chemical, Metallurgical and Mining Society of South Africa
J.C.S.	Journal of the Chemical Society, London
J. chim. méd.	Journal de chimie médicale, de pharmacie et de toxicologie
J. chim. phys.	Journal de chimie, physique, electrochimie, theromchimie, radiochimie, mécanique chimie, stoechiométrie
J. de l'Anat.	Journal de l'anatomie et de la Physiologie normales et pathologiques de l'homme et des animaux
J. de Microgr.	Journal de micrographie
J. dist.	Journal de la distillerie française
J. Exper. Med.	Journal of Experimental Medicine
J. Frank. Inst.	Journal of the Franklin Institute
J. Gasbel.	Journal für Gasbeleuchtung und verwandte Beleuchtungsarten
J. Goldschm.	Journal der Goldschmiedekunst und verwandter Gewerbe
J. Ind. Eng. C. Chem.	Journal of Industrial and Engineering Chemistry
J. Infect. Dis.	Journal of Infectious Diseases
J. Med. Paris	Journal de médicine de Paris
J. Med. chim. pharm.	Journal de Chimie Medicale, de Pharmacie, et de Toxicologie
J. Med. Res.	Journal of Medical Research
J. Path. Bact.	The Journal of Pathology and Bacteriology
J. pharm.	Journal de pharmacie
J. pharm. chim.	Journal de pharmacie et de chimie
J. Phot.	Journal of Photography
J. Phot. Suppl.	Journal of Photographic Supplies
J. Phys. Chem.	The Journal of Physical Chemistry
J. Physiol.	The Journal of Physiology

J. prakt. Chem.	Journal für praktische Chemie
J.S.A.	Journal of the Royal Society of Arts
J. Russ. Phys. Chem. Soc.	Journal of the Russian Physical Chemical Society
J.S.C.I	Journal of the Society of Chemical Industry
J. Soc. Dyers Col.	Journal of the Society of Dyers and Colourists
J. suisse chim. pharm.	Journal suisse de chimie et pharmacie
J. U. S. Artil.	Journal of the United States Artillery
Kreutzer's Jahrsb. Phot.	Kreutzers' Jahresbericht Photographie
Lancet	The Lancet, London
Leather	Leather
Leath. Mfr.	Leather Manufacturer
Leath. Tr. Rev.	Leather Trades Review
Lederind.	Lederindustrie (Deutsche Gerwer-Zeitung)
Ledertech. Rund.	Ledertechnische Rundschau
Le Génie Civil	Le Génie Civil
Leipz. Färb. Ztg.	Leipziger Färber- und Zeugdrucker-Zeitung
Lond. Phot. Soc.	London Photographie Society
Lux.P.	Luxemburg Patent
Man. Build.	The Manufacturer and Builder
Maschinenb.	Der Maschinenbauer
Mat. grasses	Les Matières grasses
Med. naturw. Arch.	Medizinisch-naturwissenschaftliches Archiv.
Med. Times	The Medical Times, London
Med. Wschr.	Medizinische Wochenschrift
Med. Ztg. Russl.	Medicinische Zeitung Russlands
Mem. Manch. Lit. Phil. Soc.	Memoirs and Proceedings of the Manchester Literary and Philosophical Society
Merck's Rep.	Merck's Report
Metal Ind.	The Metal Industry
Met. Tech.	Metal Technik
Mex.P.	Mexican Patent
Midland Drug.	Midland Druggist and Pharmaceutical Review
Mitt. Centralst. f. Wiss.-Tech. Unters.	Mitteilungen Centralst. für Wissenschaftliche Technologische Untersuchungen
Mitt.Kgl.Materialprüfungsamt	Mitteilungen aus dem Königlichen Material prüfungsamt zu Gross Lichterfelde West
Mitt. Malerei	Technische Mitteilungen für Malerei
Mitth. Zool Sta. Neapel.	Mittheilungen aus der zoologischen Station zu Neapel, etc.
Monatsh.	Monatshefte für Chemie und verwandte Teile andere Wissenschaften
Monats. p. Dermatol.	Monatschfte für praktische Dermatologie
Mon. sci.	Moniteur scientifique
Mon. teint.	Moniteur de la teinture des apprêts et de l'impression des tissus
Mon. Text. Ind.	Leipziger Monatsschrift für Textil-Industrie
Montreal Pharm. J.	Montreal Pharmaceutical Journal
Mov. Piet. W.	Moving Picture World
Münch. med. Wochschr.	Münchener medizinische Wochenschrift
Must. Ztg.	Leipziger Färber Zeitung (Färberei Musterzeitung)
Nat.	Nature
Nat. Disp.	National Dispensatory
Nat. Drug.	National Druggist
Neurol. Centralb.	Neurologische Centralblatt
Nick.	The Nikelodeon
N. med. chir. Ztg.	Neue medicinisch-chirurgische Zeitung
N. O. M. and S. J.	New Orleans Medical and Surgical Journal
N. J. Pharm.	Neues Journal der Pharmacie für Aerzte, etc.
N. Y. Med. J.	New York Medical Journal
Oest. Chem. Ztg.	Oesterreichische Chemiker Zeitung
Off. Gaz. U. S. Pat. Off.	Official Gazette United States Patent Office
Oil Colour J.	Oil and Colourman's Trades Journal
Orgelb.	Die Orgelbauzeitung

Paper Making	Paper Making
Paper Mill	Paper Mill and Woodpulp News
Paper Tr. J.	Paper Trade Journal
Papier Ztg.	Papier Zeitung
Pharm. Centralh.	Pharmazeutische Centralhalle für Deutschland
Pharm. Era	Pharmaceutical Era
Pharm. J.	Pharmaceutical Journal and Pharmacist
Pharm. Post	Pharmazeutische Post
Pharm. Ztg.	Pharmazeutische Zeitung
Pharm. Ztg. Russl.	Pharmazeutische Zeitung Russlands
Pharm. Ztschr.	Pharmazeutische Zeitschrift
Phil. Mag.	Philosophical Magazine
Phot. Archiv.	Photographische Archiv.
Phot. C. Bl.	Photographische Centralblatt
Phot. Chronik	Photographische Chronik und allgemeine Photographen-Zeitung
Phot. Corr.	Photographische Correspondenz
Phot. Jour.	Wilhelm Horn's Photographische Journal
Phot. Mag.	Photographic Magazine
Phot. Mitth.	Photographische Mittheilungen
Phot. News	Photographic News
Phot. Rundsch.	Photographische Rundschau und Photographische Centralblatt
Phot. Wochenbl.	Photographische Wochenblatt
Phot. Zeit.	Deutsche Photographen-Zeitung
Phys. Rev.	Physical Review
Physik.-Chem. Centr.	Physikalisch-chemische Centrablatt
Physik. Zts.	Physikalische Zeitschrift
Poly. Not. Bl.	Polytechnische Notizblatte
Pogg. Beibl.	Poggendorffs Annalen der Physik und Chemie, Beiblätter
Pop. Sci. Mon.	Popular Science Monthly
Print. Reg.	Printers' Register
Proc. Am. Acad.	Proceedings of the American Academy of Arts and Sciences
Proc. Am. Micr. Soc.	Proceedings of the American Microscopical Society
Proc. Am. Pharm. Assoc.	Proceedings of the American Pharmaceutical Association
Proc. Am. Phil. Soc.	Proceedings of the American Philosophical Society
Proc. Am. Soc. Test. Mat.	Proceedings of the American Society for Testing Materials
Proc. Chem. Soc.	Proceedings of the Chemical Society
Proc. Manch. Lit. Phil. Soc.	Proceedings of the Manchester Literary and Philosophical Society
Proc. Roy. Soc. Edin.	Proceedings of the Royal Society of Edinburgh
Proc. Roy. Soc. Lon.	Proceedings of the Royal Society of London
Proc. Soc. Exp. Biol. Med.	Proceedings of the Society for Experimental Biology and Medicine
Publ. ind.	Publication industrielle des machines par Armengaud
Pulp Paper Mag. Can.	Pulp and Paper Magazine of Canada
Quar. J. C. Soc.	Quarterly Journal of the Chemical Society
Quar. J. Med.	Quarterly Journal of Medicine
Quar. J. Micr. Soc.	Quarterly Journal of the Microscopical Society
Queens Micr. Bull.	Queens Microscopical Bulletin
Rass. min.	Rassegna minerarria metallurgiea e chimica
Rech. sur l'Hist. et le Dev. des Insectes	Recherche sur l'Histoire et le Developpement des Insectes
Rec. trav. Chim.	Recueil des travaux chimiques des Pays-Bas et de la Belgique
Reimann's Z.	Reimann's Färberzeitung
Rep. Chim. pure	Repertorium
Répert. pharm.	Répertoire de Pharmacie, Archives de pharmacie et Journal de chimie medicale réunis
Rep. H.M. Insp. Expl.	Report of His Majesty's Inspectors of Explosives

Rev. chim. ind.	Revue de chimie industrielle et La revue de physique et de chimie
Rev. gén. chim.	Revue générale de chimie pure et appliquées
Rev. gen. sci.	Revue générale des sciences pures et appliquées
Rev. gén. mat. color.	Revue générale de matières colorantes et de leurs applications aux textiles
Rev. Ind.	Revue industrielle
Rev. med. franc. et étrang.	Revue médicale française et étrangère
Revue phot.	Revue suisse de photographie
Revue tech.	La Revue technique
Revue Trav. Chim.	Revue Travaux Chimique
Revue J.	Revue Journal
Russ.P.	Russian Patent
Schuh Ind.	Schuh Industrie
Schweiz. Wochschr.	Schweizerische Wochenschrift für Chemie und Pharmazie
Sci. Abs.	Science Abstracts
Sci. Am.	Scientific American
Sci. Am. Suppl.	Scientific American Supplement
Sci.	Science
Seifenfabr.	Seifenfabrikant, Der
Shoe Lea. Repr.	Shoe and Leather Reporter
Snelling's Phot. J.	Snelling's Photographische Journal
Span.P.	Spanish Patent
Sprechsaal	Sprechsaal
Sprengst. Waffen Mun.	Sprengstoffe, Waffen und Munition
Swiss P.	Swiss Patent
Suddeut. Apoth. Ztg.	Suddeutsche Apotheker Zeitung
Tagb. Frankf. Naturf. .	Tageblatt
Techniker	Deutsche Techniker Zeitung
Techn. Quart.	Technology Quarterly
Text. Am.	Textile American
Text. Col.	Textile Colorist
Text. Mfr.	Textile Manufacturer
Text. Rec.	Textile Recorder
Text. World Rec.	Textile World Record
Text. Färb. Ztg.	Textil und Färberei-Zeitung
Text. Ztg.	Textil Zeitung
Therap. Gaz.	The Therapeutic Gazette
Therap. Monats.	Therapeutische Montashefte
Tijdschr. nijv.	Tidjdschrift ter bevordering van nijverhed
Tischl. Ztg.	Deutsche Tischlerzeitung
Trans. Am. Electrochem. Soc.	Transactions of the American Electrochemical Society
Trans. Am. Micr. Soc.	Transactions of the American Microscopical Society
Trans. Roy. Soc. Lon.	Transactions of the Royal Society of London, Philosophical
Uhlands Trade Rep.	Uhland's Technische Rundschau
U. S. Disp.	United States Dispensatory
U. S. Nav. Inst. Proc.	United States Naval Institute Proceedings
U. S. Nav. Med. Bull.	United States Naval Medical Bulletin
U.S.P.	United States Patent
U.S.Ph.	United States Pharmacopoeia
Verh. v. Gew. Sitz. B.	Verhandlungen des Vereins zur Beförderung des Gewerbefleisses Sitzung Berichte
Vierteli. Schr. f. Zahn.	Vierteljahreschrift
Virchow's Arch. f. path. Anat. u. Hist.	Virchow's Archiv. für pathologie, Anatomie und Histologie
Wag. Jahrsb.	Wagner's Jahersbericht
West. Chem. Metal.	Western Chemist and Metallurgist
West. Drug.	Western Druggist
Wien. Mitt. Phot.	Wiener Mitteilungen (Photographischen Inhalts)
Wochbl. Papierfabr.	Wochenblatt der Papierfabriken

Wochsch. Brau.	Wochenschrift für Brauerei
Wollen Ztg.	Wollen Zeitung
World's Paper Trade Rev.	World's Paper Trade Review
Zahnheilk.	Journal für Zahnheilkunde
Zahntech.	Die Zahntechnische Reform
Z. anal. Chem.	Zeitschrift für analytische Chemie
Z. ang. Chem.	Zeitschrift für angewandte Chemie, und Zentralblatt für technische Chemie
Z. anor. Chem.	Zeitschrift für anorganische Chemie
Z. chem. Apparat.	Zeitschrift für chemische Apparatenkunde (Discontinued)
Z. chem. Ind. Kolloide	Zeitschrift für Chemie und Industrie der Kolloide
Z. Dreschler	Zeitschrift für Dreschsler, Elfenbeingraveure und Holzbildhauer
Z. Färben-Ind.	Zeitschrift für Färben-Industrie
Z. Feuerwehr.	Illustrirte Zeitschrift für die deutsche Feuerwehr
Z. ges. Brauw.	Illustrirte Zeitschrift das gesammte Brauwesen
Z. ges. Schies-Sprengstoffw.	Zeitschrift für die gesamte Schiess-Sprengstoffwesen
Z. Klin. Med.	Zeitschrift für Klinische Medizin
Z. Nahr. Genuss. (Z. genuss).	Zeitschrift für Untersuchung der Nahrungs-und Genussmittel, sowie der Gebrauchsgegenstände
Z. pap.	
Z. physiol. Chem.	Zeitschrift für physiologische Chemie (Hoppe-Seylers)
Z. physik. C.	Zeitschrift für physikalische Chemie, Stöchiométrie und Verwandschaftslehre
Z. physik Chem. Unter.	Zeitschrift für den physikalischen und chemischen Unterricht
Z. Reprodukt.	Zeitschrift für Reproduktiontechnik
Z. Spiritusind.	Zeitschrift für Spiritusindustrie
Z. V. dt. Ing.	Zeitschrift des Vereins Deutscher Ingenieure
Z. Ver. Zuckerind.	Zeitschrift des Vereins der deutschen Zuckerindustrie
Z. wiss. Mikr.	Zeitschrift für wissenschaftliche Mikroscopie
Z. wiss. Phot.	Zeitschrift für wissenschaftliche Photographie
Z. wiss. Zool.	Zeitschrift für wissenschaftliche Zoologie
Z. U. N. G.	Zeitschrift für Untersuchung der Nahrungs- und Genussmittel sowie der Gebrauchsgegenstände

NITROCELLULOSE INDUSTRY

CHAPTER

CELLULOSE

Broadly speaking, the framework of the individual cell—the predominating constituent of plant tissues—the structural basis of all vegetable [1] organisms—is cellulose. It is the plant itself minus its protoplasmic contents, the latter being nitrogenous and concerned with the living functions of the cell.[2] Cellulose is not the name of a definitely characterized chemical individual, but rather a generic name applied to a class of substances which possess many physical and chemical characteristics in common. As a group, the celluloses are for the most part colorless bodies, neutral, devoid of odor, insoluble in all simple solvents without decomposition, and have a sp.gr. ranging from 1.3–1.5. They possess the elementary composition indicated by the figures C 44.4, H 6.2, O 49.4, and represented by the statistical formula $C_6H_{10}O_5$. It is generally assumed, however, that the real formula is n times the empirical formula, $C_{12}H_{20}O_{10}$ being often regarded as the minimum.[3] Cellulose belongs to the

1. *Animal Celluloses.* In the mantles of many *Acidia* and *Tunicata*, especially *Pyrosomidæ*, *Salpidæ* and *Phallusiæ*, a principle termed tunicin has been isolated, which in empirical composition and many other respects resembles cotton cellulose. A similar body has also been extracted from insects and other articulata. Its occurrence in the skins of certain species of snakes and amphibians has as yet not been definitely proven. It is claimed cellulose is found in the body in tuberculosis and certain other pathological processes. Virchow (C.R., 1853, **37**, 492, 860) having reported finding cellulose in degenerated human spleen and in certain parts of the brain. These animal celluloses are extracted by repeated hydrolysis, and Schmidt (Ann., 1845, **54**, 318), Berthelot (C.R., 1858, **47**, 227), Löwig and Kölliker (J. pr. C., 1846, **39**, 439), and Franchimont (C.R., 1879, **89**, 775), who have investigated this subject, are of the opinion that the bodies extracted are cellulose. Cross and Bevan ("Cellulose," 87) cite the work of Halliburton (Quar. Jour. Micros. Soc., 1885, 445) where cellulose was detected in the investing matrix of the protozoa, *Ophrydium versatile*.

2. In the individual contiguous cells of the higher plants coalescence takes place so that in certain places their walls are broken up and tubular vessels result which frequently attain extraordinary lengths.

3. From the action of zinc chloride upon cellulose it has been inferred that the

general class of carbohydrates, which includes also the starches,[1] dextrins and sugars. As yet its constitution is undetermined, being variously regarded as an alcohol containing both aldehydic and ketonic groups. The reactions of cellulose are those of saturated compounds. Cellulose does not appear to originate as the immediate product of the synthetic action of carbon dioxide and water upon the protoplasmic cell contents directly, but apparently through the mediation of starch and other carbohydrates. The mechanism of this synthesis is not clear, but has been assumed on physiological

latter contains OH groups, so arranged as to give to the cellulose the properties of a salt. L. Vignon has proposed the following constitutional formula:

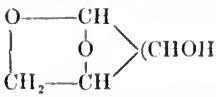

based upon his study of the higher cellulose nitrates and their decomposition with alkalis into hydroxypyruvic acid as one of the products. Green and Perkin (J.C.S., 1906, **89**, 811) and A. G. Green (Zeit. Text. Chem., 1904, **3**, 97) represent cellulose as an inner anhydride of glucose, and give the following formula:

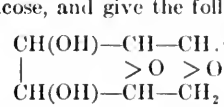

which however, has but three OH groups, and properly does not admit of the formation of a tetracetyl derivative. The CH_2OH, CHOH, CO groups, and possibly the methoxy (CH_3OH) groups are the only ones as yet definitely determined. It would also appear that there are celluloses of different degrees of complexity, containing varying numbers of the typical cellulose complexes. Cross and Bevan have applied to the unit or C_6 group the following formula:

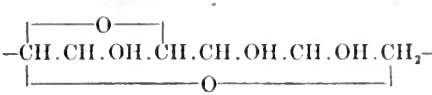

Recent analyses of several anhydrous polysaccharides indicate that the generally accepted formula for starch, cellulose, etc. $(C_6H_{10}O_5)_n$ is incorrect, and should be replaced by $(C_6H_{10}O_5)_n$, H_2O. In raffinose, melezitose and mannasaccharide, $n=3$; in inulin, $n=6$ (H. Kiliani, Chem. Zeit., 1908, **32**, 366; abst. J.C.S., 1908, **94**, (1), 320). The assumptions for the C_{12} formula are based on the existence of a pentanitrate, recent work on the cellulose acetates, and the insoluble and colloidal nature of cellulose. A. Green (Zeit. Text. Chem., 1904, l.c.) regards these reasons as insufficient for expanding the cellulose formula beyond the C_6 limit. See H. Fenton, J.C.S., 1901, **79**, 361; M. Gostling, Proc. Chem. Soc., **18**, 250.

1. Starch is the most closely allied carbohydrate, and is generally regarded as the parent substance of cellulose. Little is known with regard to its chemical constitution. The formation of a triacetylmonobenzoate, and a tetrabenzoate have been recorded, from which it is spoken of as a tetratomic alcohol, containing four equal OH groups. Cellulose differs most markedly from starch in the fact that the former is almost indestructible, and can only be brought to a state of putrefaction in the presence of albuminoid and other nitrogenous bodies. Acids, alkalis and enzymes readily hydrolyze starch into simpler bodies, but no such analysis, at least artificially, has been observed among the celluloses. It appears however, that such transformations occur in the living plant. For review of our knowledge of starch see A. Ling (Seventh Int. Congr. App. Chem., London, 1909). See starch acetate, formate, nitrate, xanthate, feculose.

grounds to be comparatively simple. While there has been considerable speculation as to the inner constitution of cellulose, but little experimental data have been accumulated of a definite nature. Cross and Bevan, the authorities on cellulose, state that "no purely chemical synthesis of a compound similar to cellulose has been attempted; we are therefore without the essential criterion of the correctness of any general formula which might be proposed, if only as a condensed expression of the relationship and functions of its constituent groups. But although no such formula can at present be proposed having more than a speculative value, it will be a useful guide to future investigation to sum up the reactions which throw a direct light upon the function of the cellulose molecule as a whole, and of its constituent groups."

Classification of Celluloses. Fremy[1] who has classified the celluloses and their allied bodies, has distinguished them according to their chemical basis as follows: (*a*) celluloses proper, including normal cellulose, metacellulose and paracellulose; (*b*) vasculose, identical with lignocellulose and found chiefly in the woody fibers; (*c*) cutose, and (*d*) pectose, found in unripe fleshy fruits and roots, and transformed under the influence of acids into pectin.

Compound Celluloses. There are a great number of substances more or less intimately related to cellulose, to which the term "compound celluloses" has been applied. These are usually subdivided into the three following groups:

(*a*) Pectocelluloses, which include most of the vegetable textile fibers, with the exception of cotton which forms a class by itself, and jute which is a lignocellulose. The non-cellulose constituents are usually pectic substances, characterized as vegetable extractive bodies of an acid nature which readily gelatinize.[2] Unlike the adipocelluloses, they are said to be slightly richer in oxygen than normal cellulose, an analysis of raw flax—which is typical of this class—giving C 43.7, H 5.9, O 50.4. On boiling with dilute alkalis the pectocelluloses are readily resolved into cellulose, the pectic matters being transformed into soluble derivatives, and this is what takes place in the bleaching of linen. Many other fibers contain or consist of pectocelluloses,[3] and these derivatives were identified by E. Schunk in the products of the alkaline boiling of raw cotton.[4] The cellular

1. C.R., 1859, **48**, 667; 1876, **83**, 1136. His system of classification has not found favor with some critical writers.

2. Arthur Müller (Leipzig, 1904) has published a bibliography of colloids with 350 original publications cited, and Whitney and Ober (J.A.C.S., 1901, **23**, 856) have compiled an index to the literature of the same subject.

3. Webster, J.C.S., 1883, **43**, 23.

4. Proc. Manchester Lit. Phil. Soc., Vol. IV, Third Series, p. 95.

portion of certain fruits (apple, pear, plum), and roots (turnip, carrots, beets) contains large amounts of pectocelluloses.

(*b*) Lignocelluloses comprise the main portion of all woody tissues, as well as one textile fiber, jute, which in its raw state is richer in carbon than cellulose. Lignocellulose is chemically far more reactive than cellulose, and is readily attacked by acids, alkalis and oxidizing agents. Freely soluble in cuproammonium, but incompletely precipitated upon acidifying, hence of but little value for the formation of artificial filaments in imitation of silk. Nitric and sulphuric acids nitrate jute (see nitro-jute), the gain in weight being approximately that of cotton cellulose, and like the cellulose nitrates, give no amido products upon reduction, thus indicating true nitric esters. According to Sachsse [1] lignocellulose consists of about 75% cellulose and the balance lignin, a body of an aldehydic character. Iodine is absorbed by jute, the resulting compound being about as unstable as iodide of starch. This reaction has been taken advantage of for the quantitative determination of lignocelluloses in combination with other forms of cellulose. Dilute nitric acid acts upon jute at 80°, forming oxycellulose, oxalic acid, carbon dioxide and a peculiar derivative of undetermined composition. The lignocelluloses hydrolyze much more readily than the simple celluloses, furfurol being obtained in considerable quantity when the temperature is raised to boiling. Glycolignose, the substance of fir and other Abies woods, and glycodrupose, the substance in the stony concretion of pears,[2] are other forms of lignocellulose. "Crude fiber" applied to the residue obtained by boiling fodder plants with alkaline and acid solutions has been found in most cases to be a lignocellulose.

(*c*) Adipocelluloses form the outer or epidermal layer of leaves and fibers, readily transformed by oxidation with nitric acid into products similar to those formed by the oxidation of fats, together with cellulose. They are of a cellular rather than of a fibrous character, richer in carbon and poorer in oxygen than cotton cellulose, and comprise the main constituent of the leaves, fleshy fruits and stems of annuals. The chief adipocelluloses are cork and bark, which when the impurities are removed leave a neutral body called cutose. The chemistry of these bodies has as yet been but imperfectly investigated.

Separation of Cellulose.[3] Isolation of cellulose from raw material may be accomplished by boiling the tissue in solutions of the caustic

1. "Farbstoffe," 151.
2. Erdmann, Ann., 1866, **138**, 1; Bente, Ber., 1875, **8**, 476.
3. The typical celluloses are not separated from the plant tissues in a pure state, but either in admixture or intimate chemical combination with other groups

alkalis, and after washing, exposure to the action of fluorine or chlorine at atmospheric temperature and pressure to dissolve the inorganic compounds, especially iron and silica. For more refractory compounds, boiling in dilute alkaline solutions is resorted to, i.e., sodium sulphite, carbonate or hydroxide, to dissolve the products of saponified wax and other non-cellular constituents. In some instances—as with dense ligneous structures or those high in silica—it may be necessary to repeat this series of operations before entire purification has been affected. Maximum freedom from silica is to be obtained by long immersion in hydrofluoric acid, followed by Soxhlet extraction with ether to remove fat and wax, with perhaps an additional treatment with hydrochloric acid to remove iron. The tissue is then washed until neutral and dried. The purest form of naturally occuring cellulose is cotton, that purified artificially, the so-called "ashless Swedish filter-paper," which has been subjected to a series of treatments similar to that outlined above. This paper, which is used for filters in quantitative analysis, seldom has an ash in excess of 0.0004 gm. per sq. cm., an amount so small as to be negligible in ordinary analytical work.

Ash. Cellulose burns quietly with a luminous, smoky flame, leaving from 0.5 to 2% residue as ash, over half of which is usually silica. It has frequently been asserted that this silica has a distinct structural function in carrying on the life processes of the cell. A. Ladenburg [1] and W. Dange,[2] who have carefully investigated this subject, arrived at entirely negative conclusions.[3] The natural ash of the celluloses seldom exceeds 2%, although in some siliceous plants it may rise to as high as 30%.[4]

Cellulose and Water. All vegetable tissue in their normal air-dry condition retain varying quantities of moisture, usually varying between 6–12%. This "hygroscopic moisture," as it is termed, is readily driven off at 100°, but reabsorbed when the tissue is exposed for any length of time to the atmosphere. In the same cellulose, this "water of condition" will vary not more than 1–2% from the mean with extremes of normal atmospheric temperature

or compounds. These latter usually display greater chemical activity. This is especially true of the lignocelluloses, which contain the ketohexane groups in union with the cellulose, and therefore combine directly with the halogens.

1. Ber., 1872, **5**, 568.
2. Ber., 1884, **11**, 822.
3. They conducted their experiments on the Equisetum species, characterized by an ash high in silica, in which they endeavored to determine the presence of organic silicon compounds analogous to carbon compounds. They showed that the functions of various plants were not disturbed by cultivation in a silica-free soil.
4. As distinguished from mechanically contained dirt, not entering into the structure of the plant.

and humidity.[1] In water, cellulose is insoluble and unchanged by boiling for several hours. At 200°, however, it is entirely decomposed, passing into solution in the water. The action is considerably enhanced by boiling under pressure. With a pressure of 5–6 atmospheres the cellulose is noticeably attacked, which increases with continued pressure until, at 29 atmospheres, it is entirely disintegrated and changed to hydrocellulose.[2]

1. The absorption and retention of water by cellulose has been summarized by Cross and Bevan, "Cellulose" 4, who point out that the main facts to be noted are (1) "the property of attracting water is a property of the cellulose substance itself and in no way dependent upon the form in which it occurs. The amorphous modifications of cellulose obtained by solution and reprecipitation in various ways are equally 'hygroscopic.'" Also that the phenomenon is definitely connected with the number of OH groups in the cellulose molecule, for, as these are suppressed by combination with negative radicals in the formation of the cellulose esters, the products show decreasing avidity for atmospheric moisture. This point is substantiated by the well-known fact that the cellulose nitrates and acetates are not as hygroscopic as the cotton from which they are prepared. This variation has nothing to do with the visible external structure of the cellulose. The question of moisture is of great importance in the spinning operations of the entire line of textile fibers. In the "mule" spinning of cotton, the moisture content of the spinning room must be kept in rather narrowly confined limits in order to preserve the continuity of the cotton fiber and minimize the formation of knots.

2. Cellulose can unite with one molecule of water to form hydrocellulose, having the composition represented by the formula, $C_{12}H_{22}O_{11}$. This derivative may be prepared by the action of sulphuric acid upon cellulose, preferably when the acid is dilute and accompanied by a high temperature. Hydrocellulose has the appearance of the cotton from which prepared, but no strength, being readily reduced to a fine powder. This brittleness is of technical importance, as in the well-known method of carbonizing wool, whereby the vegetable constituents (seed hairs, etc.) in the wool are converted by the combined action of heat and sulphuric acid into hydrocellulose, which being brittle is readily removed by mechanical means. Hydrocellulose is of considerable interest in the preparation of nitric and acetic esters, on account of its greater reactivity than cellulose, the hydrocellulose nitrates and acetates being more readily soluble in simple and compound solvents. Cellit, to which reference will again be made, is a plastic hydrocellulose acetate of great technical promise. The statement has been made that the presence of nitrohydrocelluloses in the higher cellulose nitrates increases the readiness with which the latter may be exploded by percussion. Hydrocellulose may be prepared in large quantities by the method of R. Stahmer (E.P. 19039, 1900) as follows: Chlorine is conducted into glacial acetic acid until the latter is colored perceptibly yellow, when the mixture is heated to 60–70° and well-separated cotton introduced in small amounts with constant and thorough stirring. In a short while the cellulose swells considerably and becomes viscous, the most satisfactory proportions being 5 of acetic acid to 1 of cellulose. The heating is continued until a sample taken out and tested is found to be fully miscible with water, when the heating is discontinued and the material washed until neutral and dried. Care must be taken not to allow the mass to become heated above 85° or the mass may entirely disintegrate. Other acids may replace acetic acid. Hydrocellulose prepared by means of potassium chlorate is said to be distinguished by very great indifference towards acids and alkalis, and its use in the manufacture of articles which come in contact with them is especially recommended by Stahmer. Hydrocellulose has been investigated by Girard (C.R., 1875, **81**, 1105; 1879, **88**, 1322; 1881, **92**, 337); A. L. Stern (J.C.S., 1904, **85**, 336); Cross and Bevan (J.C.S., 1904, **85**, 691); Schwalbe, Ber., 1907, **40**, 4523; Chem. Zeit., 1907, **31**, 931; Zeit. ang. Chem., 1907, **20**, 2166; Schwalbe and W. Schulz, Ber., 1910, **43**, 913. A differentiation between cellulose and hydrocellulose may be made by means of iodine, which has no effect on the former, but stains the latter blue. C. Schwalbe (Z. ang. Chem., 1909, **22**, 155) in contradistinction to Büttner and Neumann

Action of Acids on Cellulose. As a reactive body cellulose is very passive, resembling in this respect nitrogen or the paraffin hydrocarbons. It enters into combination with but few substances, and then only to a limited extent and with considerable difficulty. The celluloses are therefore very resistant to processes of oxidation and reduction, hydrolysis and dehydration. With dilute sulphuric acid, cellulose is transformed into glucose and dextrin, the conversion

(Z. ang. Chem., 1908, **21**, 2609; abst. J.S.C.I. 1909, **28**, 105) contests their view that elementary analysis is the best measure of the degree of resolution of hydrocellulose in that it fails to make a distinction between hydrocellulose and cellulose hydrates. He claims the cupric reduction method (see Chapter XIX) is characteristic of hydrocelluloses and in actual use in practice for the determination of the degree of hydrolysis. He finds that the blue color produced by zinc chloriodine reagent with hydrocellulose is very transient and rapidly removed by water, whereas the similar coloration with cellulose hydrates resists the action of water for a considerable time.

Cellulose Hydrates. It is necessary to emphasize the difference between hydrolysis and hydration in the case of cellulose, although under certain conditions both may occur simultaneously. The hydrocelluloses, products of hydrolytic action, are generally characterized by free carbonyl groups, which reduce Fehling's solution. The cellulose hydrates may be produced, with or without simultaneous hydrolysis, whenever cellulose is subjected to the action of alkalis, acids, or salts which exert a swelling or solvent influence in presence of water. According to Cross, hydration may take place in presence of water by mechanical action alone. Besides the cellulose hydrates artificially produced from the normal cellulose (anhydride), other types exist in nature which have never attained the dehydrated and polymerized condition of normal cellulose. These undeveloped types are sometimes included in the group of "hemicelluloses." The hydrated celluloses differ widely in their properties, but a high hygroscopic moisture is common to all; the hydrocelluloses, on the other hand, are distinguished by an abnormally low moisture-content. Some of the hydrates, *e.g.*, mercerized cotton, possess high tensile qualities, others, *e.g.*, the artificial silks, are mechanically deficient. These two groups also differ widely as regards their solubility in alkalis. Under certain conditions the hydrated celluloses are resistant to esterifying influences to which the normal cellulose responds. All the hydrated celluloses are characterized by a diminished resistance to hydrolysis by acids, to an extent proportional to their "degree of hydration." Many methods have been proposed for the determination of the "degree of hydration" of a given cellulose: Vieweg measures the absorption affinity towards sodium hydroxide; Cross and Bevan utilize the thio-carbonate reaction and measure the viscosity of the product; Hübner uses a colorimetric method with solution of iodine in zinc chloride of different strengths, while Knecht measures the absorption of benzopurpurin under standard conditions. C. Schwalbe (Z. ang. Chem., 1909, **22**, 197) has devised a method based on the increased susceptibility to hydrolysis by acids. The procedure is as follows: The "copper value" (cupric-reducing value) of the sample is first determined on 3 gm. of the substance in the manner described in Chapter XIX (see J.S.C.I., 1907, **26**, 548). Another portion of the finely chopped substance is then boiled with a standard quantity of sulphuric acid of 5% strength for fifteen minutes with constant stirring. The acid is neutralized and the prescribed quantity of Fehling's solution is added without separating the hydrolyzed fiber from the liquid. In this way a second "copper value" is obtained, and the difference between the two measures the hydrolysis which has taken place and which is proportional to the "degree of hydration" of the original cellulose. Recent (H. Ost and F. Westhoff, Chem. Zeit., 1909, **33**, 197) investigations on the "cellulose hydrates," including mercerized cellulose, indicate that when freed from all traces of hygroscopic moisture these substances have the same composition as ordinary cellulose, namely $(C_6H_{10}O_5)_n$; those termed "hydrocelluloses," on the other hand, appear to contain chemically combined water, and in this sense are true cellulose hydrates analogous in composition to the more complex products of starch hydrolysis.

being greatly facilitated by boiling the solution. Concentrated sulphuric acid dissolves cellulose without discoloration or separation of free carbon, producing a heavy viscous solution from which water readily precipitates out an amorphous mass called amyloid.[1] By the action of moderately concentrated organic acids and certain acid salts, cellulose is transformed into hydrocellulose by the assimilation of a molecule of water.

A concentrated (40%) zinc chloride solution dissolves cellulose upon heating for some time to 80–100°, the same result being obtained by using a solution of 1 part zinc chloride to 2 parts hydrochloric acid. This reaction proceeds much more readily if the cellulose fiber has previously been swelled and partially disintegrated by the action of caustic soda upon it.[2] Hydrochloric acid has a similar effect to sulphuric, but less powerful. Strong nitric acid exerts a much different action, entirely disintegrating the cellulose with the formation of oxalic acid. When cellulose is boiled in moderately concentrated nitric acid, oxycellulose[3] results, which possesses a great

1. Amyloid, as its name signifies, resembles starch in its properties, notably in the formation of a blue color with iodine. The formation of amyloid is utilized in the commercial preparation of vegetable parchment paper. Unsized paper of considerable thickness is rapidly passed through a bath of strong sulphuric acid, then thoroughly washed and dried. The result is the formation of a layer of gelatinous amyloid on the surface of the paper, which is water repellant and possesses the property of contracting greatly upon drying, the tensile strength of the paper being materially increased by this treatment. Artificial horsehair has been prepared in a similar manner from certain Mexican grasses, which are digested in strong sulphuric acid, washed, and dried. They are said to possess even greater elasticity than natural horsehair, and can be used for the weaving of horsehair upholstery, usually, however, in connection with the natural hair. Amyloid has been found in normal vegetable tissues and appears therefore to be a product of plant growth. When cotton is heated alone at 250° it rapidly begins to turn brown, and at a higher temperature ignites.

2. Zinc chloriodide is employed as a delicate test for the presence of cellulose, with which it gives a deep violet color.

3. Oxycellulose appears to vary somewhat in composition, depending from what source it is obtained. The α-oxycellulose of M. Witz (Bull. Soc. Ind., Rouen (10) **5**, 416; (11) **2**, 169; Dingl. Polyt., 1883, **250**, 271; 1886, **259**, 97; J.S.C.I., 1884, 3) results from the action of 5% bleaching-powder solutions upon cellulose for twenty-four hours, the cotton being transformed into a friable powder of oxycellulose. If the action of the bleaching-powder be so controlled that the cellulose is not altered in appearance, it is found to be distinctly modified in its action towards dyestuffs, oxycellulose having a strong attraction for basic coloring matters, methylene blue especially, dyeing full shades without a mordant. Dyestuffs of acid character do not exert any affinity towards oxycellulose, the absorptive power of the latter for vanadium being so great that it will withdraw this metal from a solution containing only one-billionth, and the combination can be demonstrated by printing with aniline black (Witz and Osmond, Bull. Soc. Ind., **14**, 30). For manufacture of α-oxycellulose see I. Frankenburg and C. Weber, E. P. 12367, 1893. β-oxycellulose, $C_{18}H_{26}O_{16}$ (Cross and Bevan, J.C.S., 1884, **43**, 22; J.S.C.I., 1885, **4**, 206) is the insoluble residue of the prolonged digestion of cellulose with 20–30% nitric acid at 80–90°, and dries to a horny, hard mass. It is inferred from the low number of reacting groups that the compound is both a condensed as well as an oxidized cellulose derivative. With concentrated sulphuric acid, oxycellulose dissolves to a pink color, and when nitric acid is also present an oxycellulose nitrate

affinity for basic dyestuffs. When sulphuric and nitric acids are mixed, cellulose nitrates—organic esters—result, of great technical importance, and which are discussed in the succeeding chapters. Hydrofluoric acid forms a tough waterproof material with cellulose, resembling somewhat the product formed by the action of sulphuric acid. The organic acids, especially in solution, have little if any effect upon cellulose. However, the non-volatile acids, tartaric, citric, and oxalic, if quite concentrated or allowed to dry on the fiber, act much the same way as mineral acids, although in a more moderate degree.[1] The action of tannic acids is of great value in the textile industries as an assistant in dyeing.[2]

Action of Alkalis on Cellulose.[3] In contradistinction to the acids, alkalis are harmless to cellulose in moderate concentration and at ordinary temperatures if air is excluded. In the presence of air, however, alkaline solutions rapidly cause hydrolysis which varies as the temperature and concentration of the acting alkaline solution and which considerably decreases the tensile strength of the fiber.[4] When the temperature reaches the vicinity of 100° action is very energetic, on prolonged contact resulting in the formation of water-soluble products from disintegration of the cellulose. The action of ammonia is similar to that of the fixed alkalis, except that at high temperatures substitution takes place and amidocelluloses result.[5] Concentrated solutions of the alkalis, preferably that of sodium, exert a peculiar effect upon cellulose, first noted upon cotton by John Mercer in 1844. The alkali causes a swelling of the cell which gradually loses its structural form, and when washed free from alkali and dried, the cellulose acquires a certain luster not present before treatment, especially if the fiber has been dried under considerable tension. Upon this fact have been built the modern processes of mercerization.[6] The

results (which see). The oxycelluloses are of great importance to the textile manufacturer.

1. See Glanzstoff, Chapter XIII.

2. The basic dyestuffs have but a small affinity for cotton, so that it is impossible to produce satisfactory results by direct dyeing. Tannin, however, readily combines with the fiber, and this tannin can enter into combination with antimony in various forms (tartar emetic), the tannate of antimony formed on the fiber having considerable attraction for these dyestuffs.

3. For action of sodium hydroxide and water under pressure on cellulose, see C. Schwalbe, Chem. Zeit., 1910, **34**, 551.

4. In the process of bleaching due consideration has to be placed on this fact to prevent excessive tendering of the fiber.

5. These approach the animal fibers in their avidity for dye absorption.

6. If cotton be treated with caustic soda solution of gravity 28–30° Bé. for about two minutes at the ordinary temperature, in addition to the chemical alteration mentioned above a modification of structure also takes place, the lumen contracts, and the fibers become much shorter and thicker. The contraction is about 15% and the increase in strength about 20%, while the permanent increase in weight due to hydration is 4.5–5.5%. The elasticity of the

action of the alkaline sulphides upon cellulose is of considerable importance in dyeing.[1] By treating cellulose with very concentrated alkali solutions it is largely converted into oxalic acid.

fiber is also increased. It has been found that hot alkalis will not mercerize. Chemically this effect is due to the formation of a definite chemical compound, $C_6H_{10}O_5.NaOH$ (alkali cellulose), in a state of hydration. By treatment with water the alkali may be removed and the cellulose regenerated, not in its original form, however, but as a hydrate, $C_6H_{10}O_5.H_2O$, which retains permanently its characteristics and appearance. At first mercerization was technically unsuccessful, being restricted to the production of crepe, crepon, and other crinkled effects. However, when Thomas and Prevost (D.R.P. 85564, 1895) described their method of stretching the cotton fibers during the alkaline immersion, and subsequently washing and drying while still under tension, the resplendent appearance produced by tension gave an immediate impetus to the art. Although H. Lowe (E.P. 4452, 1890) justly claims priority of application for this process of lustering under tension, it appears he did not fully appreciate the value of the method as evidenced by his allowing the patent to lapse. P. Gardner ("The Mercerization of Cotton," Berlin), who has written a monograph of 150 pages on the subject, including the patent literature, sums up the effects of mercerization, according to Cross and Bevan, "Cellulose, 1895–1900," 23, as follows: "(*a*) Although all forms of fibrous celluloses are similarly affected by strong alkaline solutions, it is only the Egyptian and other long-stapled cottons—i.e., the goods made from them—which under the treatment acquire the special high luster which ranks as 'silky.' Goods made from American cottons acquire a certain 'finish' and luster, but the effects are not such as to have an industrial value—i.e., a value proportional to the cost of treatment. (*b*) The luster is determined by exposing the goods to strong tension, either when under the action of the alkali, or subsequently, but only when the cellulose is in the special condition of hydration which is the main chemical effect of the mercerizing treatment. (*c*) The degree of tension required is approximately that which opposes the shrinkage in dimensions, otherwise determined by the action of the alkali. The following table exhibits the variations of shrinkage of Egyptian when mercerized without tension, under varying conditions as regards the essential factors of the treatment—viz., (1) concentration of the alkaline lye, (2) temperature, and (3) duration of action (the latter being of subordinate moment):

Concentration of lye (NaOH).	5°B.			10°B.			15°B.			25°B.			30°B.			35°B.		
Duration of action in minutes.	1	10	30	1	10	30	1	10	30	1	10	30	1	10	30	1	10	30
Temperatures as under:	Percentage shrinkages (Egyptian yarns) as under:																	
2°	0	0	0	1	1	1	12.2	15.2	15.8	19.2	19.8	21.5	22.7	22.7	22.7	24.2	24.5	24.7
18°	0	0	0	0	0	0	8.0	8.8	11.8	19.8	20.1	21.0	21.2	22.0	22.3	23.5	23.8	24.7
30°	0	0	0	0	0	0	4.6	4.6	6.0	19.0	19.5	19.0	18.5	19.5	19.8	20.7	21.0	21.1
80°	0	0	0	0	0	0	3.5	3.5	9.8	13.1	13.7	14.2	15.0	15.1	15.5	15.0	15.2	15.4

"The more important general indications of the above results are: (1) The mercerization action commences with a lye of 10° Bé., and increases with increased strength of the lye up to a maximum of 35° Bé. There is, however, a relatively slight increase of action with the increase of caustic soda from 30–40° Bé. (2) For optimum action the temperature should not exceed 15–20°. (3) The duration of action is of proportionately less influence as the concentration of the lye increases. As the maximum effect is attained the action becomes practically instantaneous, the only condition affecting it being that of penetration—i.e., actual contact of cellulose and alkali." This constitutes the modern method of lustering cotton, whereby its luster is made to approach nearly that of silk. In calico printing, those parts in which the lye is brought in contact with the cotton contracts and produces the wrinkled effect alluded to. (See "Life and Labors of John Mercer," E. A. Parnell, London, 1886.) See also Chapter XX.

1. The action of alkaline sulphides on cellulose is of immense interest in the

Action of Oxidizing Agents. When permanganates, chromic acid, chlorine or bromine in the concentrated state act upon cellulose a change to oxycellulose results.[1] Nascent oxygen and other electronegative ions liberated in the electrolysis of various salts have a pronounced action upon cellulose.[2] Towards metallic salts cellulose has but little action, and in this respect differs markedly from silk.

Cotton. The purest form of naturally occuring cellulose, as has been mentioned, is undoubtedly cotton. This name comprises the downy substance enveloping the seed capsules of Gossypium, a genus of the family Malvaceæ.[3] It springs from the seed, and therefore

dyeing of black colors on cotton goods. The so-called "sulphide" colors, very fast to light and washing, have, however, been limited in their use due to the unmistakable tendering of the fiber after dyeing. This is probably due to the gradual oxidation of the sulphur to sulphuric acid. For this reason black sewing thread is seldom dyed with sulphur colors, but more often with toluylenediamine-developed blacks.

1. Unlike wool, cotton fiber possesses little power of decomposing salts, such as alum or copper sulphate, this being probably due to the fact that it has but a weak affinity for acids. A certain amount of attraction does exist, however, as is evidenced by the fact that a solution of a sufficiently basic metallic salt is decomposed by cotton, and the hydroxide or a more insoluble salt, fixed upon the fibers. Those basic hydroxides which can be obtained in solution, e.g., those of chromium, aluminum, and ferric iron, are distinctly attracted by cotton and other forms of cellulose, and find extensive use as mordants in dyeing and calico printing.

2. Dingl. Polyt., 1884, **252**, 42.

3. The following description of the typical cotton plant is abstracted from Bulletin 33, U. S. Department of Agriculture. "The cotton plant belongs to the *Malvaceæ*, or mallow family, and is known under the generic name *Gossypium*. It is indigenous principally to the islands and maritime regions of the tropics, but under cultivation its range has been extended to 40° or more either side of the equator, or to the isothermal line of 60° F.

In the U. S., latitude 37° N. about represents the limit of economic growth. The *Gossypium* plant is herbaceous, shrubby, or arborescent, perennial, but in cultivation herbaceous annual or biennial, often hairy, with long, simple, or slightly branched hairs, or soft and tomentose, or hirsute, or all the pubescence short and stellate, rarely smooth throughout; stem, branches, petiolate; peduncles, leaves, involucre; corolla, ovary, style, capsule, and sometimes the cotyledons more or less covered with small black spots or glands. Roots, tap-rooted, branching, long, and penetrating the soil deeply. Stems erect, terete, with dark-colored ash-red or red bark and white wood, branching or spreading widely. Branches terete or somewhat angled, erect or spreading, or in cultivation sometimes very short. Leaves alternate, petioled, cordate, or subcordate, 3- to 7-, or rarely, 9-lobed, occasionally some of the lower and upper ones entire, 3- to 7-veined. Veins branching and netted; the mid vein and sometimes adjacent ones bear a gland one-third or less the distance from their bases, or glands may be wholly absent. Stipules in pairs, linear-lanceolate, acuminate, often ceduous. Flowers pedunculate. Peduncles subangular or angular, often thickened towards the ends, short or very short, erect or spreading; the fruit is sometimes pendulous, sometimes glandular, bearing a leafy involucre. Involucre 3-leaved or in cultivation sometimes 4-; bracteoles often large, cordate, erect, appressed, or spreading at summit, sometimes coalescent at base or adnate to calyx, dentate, or laciniate, sometimes entire or nearly so, rarely linear; calyx short, cup-shaped, truncate, shortly 5-dentate or more or less 5-parted. Corolla hypogynous. Petals 5, often coalescent at base and by their claws adnate to the lower part of stamen tube, obovate, more or less unequally transversely dilated at summit, convolute in bud. Staminal column dilated at base, arched, surrounding the ovary, naked below, above narrowed,

is a seed hair. The seed itself is usually covered with a very coarse yellow or brown hairy growth, whereas the cotton hairs are many times longer and colorless, or nearly so.

Of the large number of species of this genus known, only about twenty are cultivated, of which but four or five may be said to be of extensive economic importance. They are shrub- or tree-like plants, from 3 to 15 feet high, their principal habitats being North America and India, although the species is more or less indigenous in all subtropical countries.[1] Cotton cellulose is used almost exclusively for

and bearing the anthers. Filaments numerous, filiform, simple or branched, conspicuous, exserted. Anthers reniform, 1-celled, dehiscent by a semicircular opening into two halves. Ovary sessile, simple, 3- to 5-celled. Ovules few or many, in two series. Style elavate, 3- to 5-parted; divisions sometimes erect, sometimes twisted and adhering together, channeled, and bearing the stigmas. Capsule more or less thickened, leathery, oval, ovate-acuminate, subglobose, mucronate, loculicidally dehiscent by 1 to 5 valves. Seed numerous, subglobose, ovate or subovate, oblong or angular, densely covered with cotton or rarely glabrous. Fiber sometimes of two kinds, one short and closely adherent to the seed, the other longer, more or less silky, of single, simple, flattened cells, more or less spirally twisted, more readily separable from the seed. Albumen thin, membranous or none. Cotyledons plicate, auriculate at base, enveloping the straight radical."

1. Monie ("The Cotton Fiber") gives the following description of the cultivation of the cotton plant: "The plant, although indigenous to almost all warm climates, is nevertheless only cultivated within a very limited area for commercial purposes, the principal centers of cotton agriculture being in Egypt, the southern portions of the United States, India, Brazil, the west and southern coasts of Africa, and the West India Islands. A large amount of white cotton is raised in China, but this is almost entirely used in the home manufactures. The time when sowing is begun in the several districts varies considerably, being largely dependent upon the climatic influences. The seasons, however, are generally as follows: American.—From the middle of March to the middle of April. Egyptian.—From the beginning of March to the end of April. Peruvian and Brazilian.—From the end of December to the end of April. Indian or Surat.—From May to the beginning of August. In the various American plantations the sowing time begins and ends almost simultaneously, while in other countries, especially where the atmosphere and climate are subject to much variation, the period of planting fluctuates. The plants in some parts being several inches above the ground, while in other parts of the same country the fields may be only under preparation. When the sowing is finished and before, and some time after the crop makes its appearance, keeping the ground free from weeds is the main object to be looked to, otherwise the soil would become much impoverished, and the product would be an inferior quality. In from eight days to a fortnight after sowing, the young shoots first appear above the ground in the form of a hook, but in a few hours afterwards the seed end of the stalk or stem is raised out of the ground, disclosing two leaves folded over and closed together. The leaves and stems of these young plants are very smooth and oily and of a fleshy color and appearance, and, as before stated, extremely tender. In examining the cotton plant from time to time during its growth, some interesting and instructive objects will be observed. Firstly, in regard to the formation of the leaves, it will be found that they will vary in form in different parts of the stem, thus, for instance, on a Gallini Egyptian (*G. barbadense*) plant, the lower leaves were entire, the center or middle 3-lobed, while the upper leaves were 5-lobed. In the *G. hirsutum* species, the lower leaves have 5 and some 3 lobes, with the small branched petioles of a hairy nature, while the upper leaves are entire and undivided. In the Peruvian cotton plant, the lower leaves are entire and of an oval shape, while the upper leaves have 5 acuminated lobes. Another interesting point observable in the growth of the cotton plant is the presence of a small cavity situated at the lower end of the

the commercial manufacture of the cellulose nitrates and acetates, and less so of the xanthates.

Gathering the Cotton.[1] The fruit known as the cotton boll consists of a pod or capsule divided by a membrane into 3 or 5 cells. In August, September, and October, when the cotton reaches maturity, indicated by the bursting of the capsules, the fruit containing the cotton and attached seeds is plucked. The cotton is separated from the seeds by means of ginning machines.

Commercial Varieties. In commerce the two principal varieties of cotton recognized are the "long staple" and the "short staple." This refers to the length of the individual fibers, which vary from 1.5–2.5 inches long in the former to seldom over an inch in the latter. In general, the whiter, cleaner, longer and more silky the individual fiber, or the smaller the diameter, the higher in value does

main vein of each leaf. Through this opening, on warm days, the plant discharges any excess of resinous matter which circulates through its branches. Before the plant attains its full height it begins to throw off flower-stalks which are generally (when perfectly formed) small in diameter and of considerable length; on the extremity of these stalks, the blossom pod after a time appears, encased in three leaf-sheaths or calyxes, with the fringes of various lengths. Gradually this pod expands until it attains to about the size of a bean, when it bursts and displays the blossom. This blossom only exists in full development for about twenty-four hours, when it begins to revolve imperceptibly on its axis and in about a day's time twists itself completely off. When the blossom has fallen, a small 3-, and in some cases, 5-celled triangular capsule or pod of a dark-green color is disclosed, which increases in size until it reaches that of a large filbert. Meanwhile the seeds and filaments have been in course of formation inside the pod, and when growth is completed the expansion of the fiber causes it to burst into sections, each cell of which, and adhering firmly to the seeds, is a tuft of the downy material." See also "Varieties of American Upland Cotton," F. Tyler, Bull. 163, U. S. Bureau Plant Industry, 1910, pp. 127, pl. 8, fig. 67.

1. Cotton as a textile fiber appears to have been used from the earliest times. Herodotus (book iii) when writing of India, mentions "trees bearing a sort of wool instead of fruit, which was better and finer than that of sheep." Spain seems to have been the first European country to use cotton goods, although India, Egypt, and China had made use of the fiber many centuries before. In Pliny's History (**19**, 5) there is described a "kind of cloth, xylina, made from wool growing on a shrub, called by some Xylon and by some Gossypium." There is no doubt but what this referred to cotton. Cotton was probably introduced into Europe by the Saracens and first manufactured in Spain in the early part of the thirteenth century. It was introduced into England by the Dutch, and the first mention made of it in trade appears in L. Roberts, "Treasury of Traffic," published in 1641, which says: "They buy cotton wool in London that comes from Cyprus and Smyrna, and at home work the same and perfect it into velveteens, fustians, dimities, and such stuffs, where it is returned and sold in London." In the Western Hemisphere, the first voyage of Columbus to the West Indies in 1492 found cotton cultivated, and woven fabrics made from it being worn by the inhabitants. Cotton was found to be the chief article of clothing among the Mexicans, while in Peru, around the time of Pizarro's conquest in 1523, many of the inhabitants were clothed in cotton garments. This may be accounted for from the fact that cotton is indigenous to Peru. According to the historian Bancroft, the first attempt at cotton cultivation in the American Colonies was at Virginia in 1621. In 1787 at Beverly, Mass., the first mill for the production of cotton goods is said to have been erected. It has been estimated that the present (1910) world's annual production of cotton exceeds 6,800,000,000 pounds

the cotton become. The longest staple and most highly prized variety is the Sea Island cotton (*G. Barbadense*) known also as "long Georgia," and grown in the eastern portion of the southern part of the United States, off the coasts of Georgia, South Carolina, and Florida.[1]

Structure.[2] The cotton fiber is a single elongated cell, broken roughly at the base from being torn from the seed, and terminating at the end in an elongated solid point. Upon magnification the

1. Other varieties possessing undisputable characters are *G. peruvianum*, which is indigenous to several parts of South America, being cultivated principally in Peru and Brazil. The plant attains a height of 10–15 feet, and bears a yellow flower. The pods, which usually contain 8–10 black seeds each, yield a long staple, and strong, although somewhat coarse, fiber, next in value perhaps to the Sea Island cotton. Most of the fibers are only partially twisted. The cotton is usually of a light creamy color. *G. herbaceum*, or Smyrna cotton, is grown principally in Asiatic Turkey. It therefore is sometimes called *G. indicum*. This is a small (3–4 feet) bushy and very hardy herb, with a yellow flower. Where other varieties cannot be grown with profit, this variety of cotton is cultivated in America, Egypt, and China, and produces a short and relatively coarse fiber, often called Surat or Indian cotton. The staple is characterized by great toughness and strength. *G. hirsutum*, or white Egyptian cotton, is not indigenous to Egypt, but is said to have been transplanted from America. A large proportion of the fibers have an undeveloped twist. *G. barbadense* can be cultivated in any region which will support the olive, where there is a hot moist atmosphere, a large rainfall, or excellent irrigation. As a rule, the quality and length of the staple increases with proximity to the sea, although that grown in Jamaica and some of the West Indies is rather inferior grade. A notable fact about Sea Island cotton is that it yields a lower percentage of lint and inferior fibers than the other varieties of cotton, therefore its net value in spinning and thread manufacture is correspondingly greater.

The "count" of cotton is a term applied to the number of hanks of 840 yards each contained in 1 pound. Size 60's, for instance, means that 60 hanks, each 840 yards in length, will weigh 1 pound. The English system of numbering, used mostly in England, United States, India, Switzerland, and Germany, includes designation of twisted as well as single yarns. For instance, if 2 single threads of count 60 are twisted together, this would be designated at 2–60's. The Belgium system is to use the number of 840-yard hanks in 500 grams; that of the French is based on the decimal system, the count being the number of 1000-meter length hanks required to weigh 500 grams. In Austria, the method is to count the number of hanks of 950 ells each in 500 grams. According to the number of the twisted threads, there is a decrease in length of 2–6% in twisting, with an increase in diameter.

2. A. Flatters has published a work (1906), "The Cotton Plant," on the microscopical development of the cotton fiber, accompanied by excellent photomicrographs of the various species of cotton, and different periods of the developing fiber. As the result of his investigations the following conclusions are arrived at: "1. That the cotton fiber is a cuticular outgrowth of the ovule. 2. That the fibers are not all developed at the same time, on the same ovule. 3. That the deposit of cellulose on the cell-wall of the fiber is not uniform and regular. 4. That the spiral twisting of the fiber is dependent upon the uniform deposit of cellulose, and subsequent evaporation of moisture and cuticular contraction. 5. That an average long-stapled fiber and an average short-stapled one have practically the same cavity-area for the deposit of cellulose. 6. That all fibers lacking spiral twisting are not necessarily unripe fibers, but fibers which may have attained solidity by continued deposit. 7. That the cotton fiber is made up of three primary elements —(*a*) the cuticular envelope; (*b*) the secondary deposit of cellulose; (*c*) the endochromic coloring matter. 8. That these primary elements are demonstrable by microscopic and chemical analysis."

fiber appears (Fig. 1) as a granular striped band, twisted spirally, thicker at the edges, and containing a central canal, without liquid,[1] the enveloping sheath being so far collapsed that the inner walls are in contact. This becomes more noticeable upon moistening the fiber—a characteristic of cotton.[2]

Externally the fiber is enveloped in a thin skin called the cuticle,

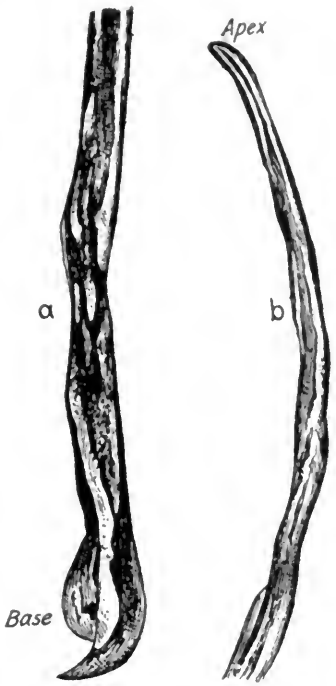

FIG. 1.—Cotton Fiber (×200).

1. This spiral formation has been attributed to the fact that upon ripening, the juices in the fiber are drawn back into the plant or dry up, and in doing so cause the fiber to become twisted from the unequal contraction and collapse of the cell wall. It has been noticed that when fibers which have had a stunted or immature growth, usually either have no inner canal, or the canal has been stopped up. This is a decidedly inferior cotton. The fiber is weak, brittle, of reduced strength and durability. This inferiority is readily apparent in attempting to spin or to nitrate or acetate the fiber; the internal diameter being so much greater, and the absence of the inner canal, cause slower and more unequal penetration of acids and more difficulty in washing the finished product free from contained acid. Such cotton is known in the trade as "dead."

2. In the unripe fiber, the canal is filled with protoplasmic matter, but in the ripening of the plant this liquid dries up, and the walls of the tube collapse and flatten out. As the ripening process increases, the adhesion of the fiber to the seed decreases much in the same manner as the ripening of fruits, so that the ripe cotton is easily separated in the ginning process. In some species, this separation of hair from the seed is so perfect that after ginning the seed shows

which substance differs chemically from cellulose, and has been regarded as a conversion product of the latter induced by moisture and air.[1]

Chemical Composition. Raw cotton consists of 88–92% cellulose, 6–8% water (cleaned cotton usually not over 5%), 0.4–0.8% fat and wax, 0.6–0.9% protoplasmic residue in the lumen, and 0.1–0.5% ash, together with a small amount of coloring matter and oil. The specific gravity of air-dried cotton is 1.5. In the presence of water cotton behaves somewhat differently from other forms of cellulose,[2] accounted for by the fact that it is less hygroscopic.

Bombax Cotton. A species of cotton quite similar to that of the cotton plant has been collected for centuries from various fruit capsules of the Bombax family which are closely allied to the Malvaceæ (cotton family) and has found commercial uses. This form of cotton is variously known as "vegetable down," and "vegetable

a polished black appearance, and is locally called "black seed" cotton in distinction from the upland or "green seed" cotton. The length of the fiber, which varies considerably even among the same variety, will range from 2 inches (5 cm.) in Egyptian to $\frac{3}{4}$ inch (18 mm.) in the inferior grades. (Structure of the Cotton Fiber, 19) gives the diameter of the fiber as 0.0004–0.0016 inch.

The central cavity known as the lumen is generally small in comparison with the diameter of the cell walls, the thickness of the latter being of considerable importance in the speed of acid penetration in nitrating processes. Sometimes the lumen is several times as broad as the cell wall. Such a cotton will both nitrate readily, wash easily, and sustain considerable mechanical loss in the several processes of treatment.

1. Whereas cellulose is readily soluble in ammoniacal cupric oxide solution, and also in concentrated sulphuric acid, cuticle is difficultly so. In treating cotton fiber with either of these reagents, a peculiar phenomenon is observed. The cotton swells up, but the cuticle is not visibly affected. As the bast fibers contain no cuticle, they do not exhibit this reaction, which therefore is a method of differentiation between the two classes of fibers.

In commerce there are 8 different degrees of fineness in cotton recognized, varying in diameter from 0.0004–0.0008 inch. The oil extracted from raw cotton appears to be very similar to, if not identical with, cottonseed oil, and has been supposed to have been carried up the fiber from the seed itself.

2. O. Masson (Proc. Roy. Soc., 1904, **74**, 230) and Masson and E. S. Richards (Ibid., 1906, **78A**, 412) have investigated the hygroscopic action of cotton, and the wetting of cotton by water. They found that when dried cotton "wool" is immersed in water, its temperature rises for some time and then gradually falls, the same phenomenon having been observed when the cotton is exposed to air saturated with aqueous vapor. Medical or "absorbent" cotton, although showing the same deportment as cotton wool in saturated air, does not show the same rise in temperature in water. In determining the amount of moisture absorbed by cotton when exposed to an atmosphere of known humidity, the authors found that simple exposure to air until no increase in weight takes place is sufficient, for as the approach to saturation is neared, the absorption is very slow indeed.

According to Bulletin 33, U. S. Department of Agriculture, the following represents the composition of the cotton fiber: Water, 6.07%; ash, 1.37%; nitrogen, 0.34%; phosphoric acid, 0.10%; potash, 0.46%; soda, 0.09%; lime, 0.19%; magnesia, 0.08%, ferric oxide, 0.02%; sulphuric acid, 0.6%; chlorine, 0.07%; insoluble matter, 0.05%. The proximate composition is stated as water, 6.74%; ash, 1.65%; protein, 1.50%; fiber (cellulose), 83.71%; nitrogen-free extract, 5.79%; and fat, 0.61%.

edredon." Bombax cotton consists of soft fibers possessing considerable luster, and white to yellow in color. Like cotton, they are seed hairs, and therefore are similar morphologically. There is an absence of spiral twist, and the fibers are shorter and the cell walls decrease in thickness, all of which tends to the production of decreased tensile strength. This form of cotton finds its principal uses in wading for upholstering work, being too weak for spinning. When nitrated this cotton forms a nitrocellulose of ready solubility and fluidity.

Vegetable Silk.[1] The seeds of various plants of the Apocynaceæ and Asclepiadeæ families contain a long tuft of silky fibers known as vegetable or Asclepias silk, but lack of strength unfits these fibers for spinning. They are used for the same purposes as Bombax, but being lighter find favor as padding for sofa pillows, and imitation eider-down quilts.

Wood Fiber. In many plants the cells, as well as the walls formed by their union, always remain soft, while in others combination takes place by which the cellulose acquires considerable firmness, the cellulose vessels being changed to lignose (wood vessels). This distinguishes the herbaceous from the wood-forming plants. The employment of wood for the successful preparation of cellulose in a pure state and in large quantities is distinctively an achievement of modern times, no attempt having formerly been made to utilize wood for this purpose.[2] In a genuinewoody plant there will be found around the stalk a growing annular layer of cellulose designated as liber, the layer being formed anew at every period of vegetation, the next and succeeding period transforming it into wood. This conversion is brought about by various bodies known collectively as "encrusting substances," which are imbedded in the cellular mass. This incrustation causes the original thin walls of the vessels comprising the liber

1. "Vegetable" wool is a product obtained from the green cones of various species of pine by fermenting and washing the disintegrated cones. In combination with cotton and wool it has been used for the production of yarns which, when mixed with sheep's wool, constitute the "hygienic" underwear recommended for rheumatic and gouty patients. It is claimed that the use of garments made of this material keeps the body uniformly warm and protects from sudden atmospheric changes. J. J. Arnaudon (Mon. Sci., 1893, **7**, 695) has studied these vegetable silks, and particularly the Kapok of India (*Bombax pentandrum*), and has stated that this fiber is particularly applicable to the manufacture of fulminating powder after nitration.

2. According to the process of F. L. Stewart and S. E. Gill (U.S.P. 845378, 1907) cellulose may be obtained from the stems of maize and similar plants by removing the water-soluble constituents, leaving the stalks in a divided and absorptive condition, and then treating the material, when moist, either with nitric oxide and steam, or with a mixture of nitric oxide and chlorine, subsequently washing, neutralizing, and again washing the cellulose obtained. By arresting the action of the chemicals at the proper point (U.S.P. 811523) half stuff for paper is obtained.

to become thicker, darker, and more solid, being gradually transformed into wood vessels of considerable length and strength. The encrusting substances are acted upon much more energetically by chemicals than is the cellulose, and it has been by taking advantage of this fact that the manufacture of wood cellulose has become a successful art.[1] Wood fiber is used as the cellulose in viscose and xanthate manufacture.

The textile industries and paper manufacture consume the major portion of the prepared cellulose. However, in the arts are well-defined outlets for considerable quantities of cellulose in a more or less changed form, the more important of which, in addition to those already mentioned, are as follows:

Alcohol from Wood. The effect of boiling dilute sulphuric acid on wood (or other forms of cellulose), especially upon prolonged heating, is to partially transform the cellulose into a fermentable sugar.[2] The fluid obtained by boiling wood with dilute sulphuric acid is neutralized with lime, and brought into alcoholic fermentation with yeast. While theoretically the problem of alcohol formation from wood is quite simple, in practice a number of difficulties have been encountered, so that hitherto but very little use has been made of this property of cellulose.

Vulcanized Fiber. Under this name a material was patented in England[3] in 1877 which is claimed to be a very efficient non-conductor of heat, and especially valuable as an insulating material. It is prepared by treating paper pulp or a textile fabric with a saturated solution of zinc chloride, and afterwards uniting by pressure. The consistency is like horn, but certain deliquescent salts[4] as glycerol

1. According to U. S. Forest Service Circular No. 44, the amount of wood used for pulp making in 1907 in the United States was 3,192,233 cords, valued at $17,735,665; 1,096,794 cords of wood were treated by the mechanical process, 1,630,393 cords by the sulphite process, and 464,936 cords were converted into "soda" pulp. The average amounts of pulp obtained per cord of wood were: Mechanical, 2372 lb.; soda, 1033 lb.; sulphite, 1009 lb. Spruce wood forms 70% of the total used for pulp making, and is chiefly treated by the sulphite process; the next in importance are poplar and hemlock, mainly converted into sulphite pulp.

2. See "Saccharification of Cellulose," H. Ost and L. Wilkening, Chem. Zeit., 1910, **34**, 461.

3. Affinity of cellulose for basic dyestuffs, according to a patent taken out by L. Vignon and L. Cassella, is increased by amidizing the fibers by treatment with calcium chloride and ammonia at 100°. Patterns are thus executed for differential dyeing in calico printing. The carbon or cellulose filaments produced as above may be combined with real silk according to E. Bronnert (E.P. 18260, 1899). Natural silk waste is dissolved in the ordinary way in a solution of zinc chloride, and the silk and cellulose solutions combined, and filaments produced from this solution. The mixture may also be used for printing on fabrics or coating cloth, it is stated.

4. E.P. 1008, 1877. The previous name for this material was Celluvert, E.P. 9319, H. W. Morrow, 1885.

or glucose are added, which makes the material quite pliable, and it is in these two forms that it is found in commerce. The chief difficulty encountered has been in the removal of the zinc salts, which require long and careful washing. If zinc is not removed, the finished material soon becomes brittle and of no value. The "fiber" may be rendered waterproof by a further process of nitration.[1] The hard vulcanized fiber may be planed, sawed and worked in the same manner as wood, or when soft molded in various forms. Two pieces may be glued together like wood. It finds considerable use for imitation carving on wood furniture. The softer mass is recommended for imitation leather and vulcanized rubber, as for valve packings, etc. Trunks, tubes, harness and chair seats are said to be made out of it, and to have proven very serviceable.

Cellulith. According to G. Springer,[2] Brunswig's cellulith is produced by grinding wood pulp in a paper beater until an apparently homogeneous mass, free from every trace of wood fiber, is obtained. This pulp is then drained from the bulk of its moisture by allowing it to run into a vat provided with a bottom of metallic boards, where it is subsequently dried, either in the air or in rooms having a temperature of about 40°. The product contracts greatly and finally forms a solid mass of the hardness of horn, which is sold under the above name. The material is not waterproof. It has a sp.gr. of about 1.5, is not inflammable, can be worked with tools like wood or horn, and is very resistant to oils, fats, alcohols and petroleum. It is said to be applicable as a substitute for horn or ebonite and to be used for buffing and polishing wheels.

Cellulose Waterproofing Preparations.[3] According to the process of Hofmeier[4] cellular matter such as linen, cotton, etc., fibers, or wood cellulose or woven material, is coated or impregnated with a solution of equal parts of albumen and glycerol, 5% borax, and 10% magnesium nitrate or sulphate. The treated sheet is dried, and after moistening the surface is pressed between heated rolls or plates. Fiber may be mixed with the solution, and the mixture pressed into molds. It is stated that in this manner a very inexpensive but at the same time efficient waterproofing fabric may be produced.

1. F. Taylor, E.P. 10864, 1884.
2. D.R.P. 3181, 1878. Hofmann, Handb. d. Papierfab., 1703, where the paper after gelatinization may be passed in sheets through the nitrating mixture, from which it is rolled into water, washed, neutralized, and dried. The inflammability, of course, is greatly increased. Seea lso Pharm. Centralh., 1900, **41**, 333; Cosmos, 1900, **42**, 384.
3. See W. Walker, Mon. Sci., 1910, (4), 22, II, 461.
4. Gummi Zeit., **15**, No. 20, 329.

Pergamyn. Hans Hoffmann,[1] who has experimented considerably with this material, states that pergamyn is simply ordinary cellulose beaten into fine fibrillæ, and without gelatinization or other chemical treatment. It is not a product derived from ordinary cellulose hydration, as has been sometimes supposed. The uses are said to be similar to those of vulcanized fiber. A. J. Hill[2] has devised a process for applying a cellulose to the fibers of a hydrated cellulose fabric, precipitating the cellulose, washing out the solvent, and then coating the fibers with a proteid, as albumen in solution. By this means artificial leathers, it is claimed, may be produced which may be printed upon as in calico printing.[3]

1. Papier Zeit., 1906, **31**, 4190; E.P. 12023, 1885; see also Gew. Bl. Würt., 1901, **53**, 348.

2. U.S.P. 705244, 1902.

3. For résumé of recent progress in industrial application of cellulose, see A. Klein, Papier Zeit., **31**, 4286, from Chem. Zeit., 1906, **30**, 1259; F. Beltzer, Rev. gen. chim., 1909, **13**. 20. For preliminary treatment of cellulose for technical processes see E. Berl (Z. ges. Schiess-Sprengstoffw., **4**, 81); O. Glum & Co. (D.R.P. 217316, 1908) the cellulose being immersed in a suitable liquid, such as glycerol or oil, and heated at a temperature above 100°.

CHAPTER II

CELLULOSE NITRATES

When the celluloses in a comparatively high state of purity are brought in contact with certain organic or inorganic acids, either alone[1] or in the presence of a dehydrating agent, union takes place, the number and nature of the combinations formed being dependent in a large measure on the concentration of the acid, the temperature and time of contact between cellulose and reacting acid, and the physical condition of the cellulose molecule. Of the synthetical derivatives of cellulose, the nitric esters[2]—the cellulose nitrates—are of the most technical importance.

Historical. The earlier investigations on the cellulose nitrates had to do entirely with the higher nitrates and explosive forms used in military operations, and it was not until a much later period that the products of lower nitration—the so-called pyroxylins, collodions and photographic nitrocelluloses—began to assume an industrial importance. The history of the rise of the nitrocelluloses of lower nitration may, perhaps, be more properly considered in connection with the foundation and rise of the celluloid, lacquer, collodion and artificial silk arts, in which they are so extensively employed at the present day.

Although Braconnot in 1833[3] described the properties of a body called by him xyloidine, and obtained by acting upon starch with nitric acid, and Pelouze five years later,[4] examined this product

1. Nitric acid alone of sp.gr. 1.42 has a remarkable toughening action upon filter paper, and other forms of cellulose. As in the processes of parchmentizing and mercerizing, the modification is effected by simple immersion of the cellulose, the paper so treated being increased in strength nearly tenfold, undergoing at the same time a contraction of about 10%. The cellulose so treated is free from nitrogen. (Francis, J.C.S., 1886, **47**, 183.)

2. Although the combinations of cellulose and nitric acid are usually spoken of as nitrocelluloses, they are more correctly described as cellulose nitrates, since they have never been found to yield amido bodies on reduction with nascent hydrogen, one of the tests for nitro-substitution products. In this instance, cellulose shows the weak alcoholic character of the molecule in the ability to replace hydroxyl for acid radicals.

3. Ann. Chim. Phys., 1833, **52**, 290; Pogg. Ann., 1833, **29**, 176.

4. C.R., 1838, **7**, 713; Jour. prakt. Chem., 1838, **16**, 168; Fritzsche, Pogg. Ann., 1831, **32**, 481.

and produced a similar body by acting upon paper with nitric acid, the credit for the discovery of the cellulose nitrates is given to Schönbein,[1] who, towards the close of the year 1845, or the beginning of the next year, announced his results on the behavior of cellulose when immersed in a mixture of nitric and sulphuric acids. Böttger heard of the results of Schönbein, and duplicated his work in August, 1846,[2] both investigators uniting to pursue the subject further. The same year Otto[3] made known his preparation obtained from cotton and nitric acid.

Schönbein made the (then fanciful) prediction that "explosive cotton wool" would soon be used entirely as a substitute for gunpowder, a prediction that is becoming more fully realized each year.[4]

This discovery was hailed with delight both by practical men and scientific investigators, and as a result of his discovery many practical tests were made, both privately and under government supervision in European countries, who looked forward to its possible adoption for war purposes.[5] These series of experiments, due to sev-

1. Pogg. Ann., 1847, **70**, 320; C.R., 1846, **23**, 678. 2. Ibid.

3. Augsburger Allgem. Zeitung, Oct. 5, 1846; Jour. prakt. Chem., 1847, **40**, 193; C.R., 1846, **23**, 807.

4. It appears from his own statements that his discovery of ozone, which he considered a peroxide of hydrogen, led him to entertain rather peculiar views as to the constitution of inorganic acids. He considered that a mixture of sulphuric and nitric acids would have a strong oxidizing power, and to contain a radical similar to ozone. This led him to the investigation of the action of his nitric acid sulphuric acid mixture on various organic bodies, in one experiment of which he discovered guncotton, and was so impressed with its remarkable properties, that he forwarded specimens to his English friends, and immediately commenced experiments looking to the use of guncotton for military purposes. Although he published his discovery, he kept the method of preparation a secret until after he had protected himself by a patent. It was announced soon afterwards, however, by Otto of Brunswick and Böttger of Frankfort that they had prepared guncotton by the treatment of cotton wool with strong nitric acid, and a short time later Knop showed that a mixture of nitric and sulphuric acids was preferable. C.R., 1846, **23**, 808.

5. In 1845 Kamarsch and Heeren (Handwörterbuch Chem., 1854, **6**, 724) working independently of Schönbein on the combined action of nitric acid with a dehydrating agent, and in 1847, Millon and Gaudin (C.R., 1846, **23**, 980, 1099; Auszug. Jour. prakt. Chem., 1847, **40**, 193, 418) employed a mixture of sulphuric acid and potassium or sodium nitrates, which they found to have the same effect. Although the credit for the development of the production of guncotton is usually given to Schönbein mainly on account of his success due to the addition of sulphuric acid for absorption of the liberated water, yet Pelouze (C.R., 1838, **7**, 713; Jour. prakt. Chem., 1839, **16**, 168) in 1838 had drawn attention to the fact that a substance of an explosive nature could be obtained by the nitration of paper, and assumed his substance identical with Braconnet's xyloidin, $C_6H_6(NO_2)O_5$, first prepared in 1833 by the action of nitric acid on starch, sawdust and linen. In November, 1838, Pelouze published experiments tending to show the relative differences between his product and xyloidin, his own appearing to be identical with guncotton. Dumas also nitrated paper, and other chemists such as Piobert in France, Morin in Russia and Abel in England, investigated the subject, but Schönbein was undoubtedly the first to prove experimentally that guncotton was superior in energy to gunpowder. See also Bley, C.R., 1846, **23**, 809; Bonjeon, C.R., 1847, **24**, 190; Payen, C.R., 1846, **23**, 999; the discovery of the solubility

eral disastrous explosions, were gradually abandoned by the several governments, except in Austria,[1] where the experiments were either more fortunate or the experimenters more persevering. Aided by the patience and courage of the Austrian, Baron von Lenk, partial success was attained, and interest in the subject revived, but only temporarily.[2] The improvements of von Lenk were in the nature of rendering the guncotton more stable, but lack of knowledge in controlling the processes of nitration gave such heterogeneous and unlooked-for results, and the process appeared so impossible of bringing to a rational basis as regards yield and properties of the finished nitrate, that progress appeared slow and difficult.[3] Tesche-

of certain kinds of pyroxylin was made in 1846 by Baudin (Guibert, "Histoire de nouveaux Medicaments." Phot. Arch., 1863, **4**, 178), but as he accomplished nothing of practical value, the work was taken up in 1847 by Flores Domonte and Menard (C.R., 1846, **23**, 1087; 1847, **24**, 87, 390; Auszug Jour. prakt. Chem., 1847, **40**, 421), and about the same time by Maynard and Bigelow. Domonte and Menard showed analytically the difference between the ether-soluble and ether-insoluble cellulose nitrate. Gaudin (C.R., 1846, **23**, 980, 1099; Jour. prakt. Chem., 1847, **40**, 418).

1. The Secretary of War in France, Feb. 3, 1846, appointed a commission under the direction of the Duke of Montpelier, which included among its members, Morin, Pelouze and Piobert, who conducted their experiments behind closed doors. The result of the work extended over three years, during which time they apparently carefully studied the subject from every aspect, and their report was unfavorable. In Russia the experiments were much less time consuming, and as the result of a few explosions, the sale and transportation of guncotton in the empire was forbidden. In England the experiments were continued until 1854, but were gradually abandoned in consequence of several spontaneous explosions. In Prussia the experiments were finally discontinued, due to several disastrous explosions.

2. The guncotton produced by Lenk's process was said to possess more stability than any heretofore made, and this in a measure may account for the more favorable reports made as the result of using his process. Lenk first boiled the cotton two or three minutes in a solution of potash to saponify the fatty bodies, drained in a hydro-extractor, washed with water, drained again, and dried. The cotton was then immersed in a mixture of 1 part nitric acid, sp.gr. 1.48–1.49, and 3 of sulphuric acid, sp.gr. 1.835, which completed the conversion in about ten minutes. The acid-soaked cotton was then placed in crocks in a cool place and allowed to remain forty-eight hours to complete the conversion, after which it was washed free from acid in the usual manner and dried. In order to eliminate final traces of acid, the product was boiled in a weak potash solution and dried slightly alkaline. In consequence of the favorable results obtained by the Lenk method, the Austrian Government appointed a commission in 1852, which continued without intermission for nearly ten years, at the end of which time the imperial commission came to the conclusion that the guncotton produced up to that time did not possess the requisite stability for war purposes. In September, 1862 (Sanford, "Modern High Explosives," 109), it was ordered that the 30 guncotton batteries should again adopt gunpowder, and guncotton used for shrapnel, but in 1865 a terrific explosion shook the country and confidence of the people to such an extent that an edict went forth for the destruction of all guncotton stored in the Austrian Empire. After its abandonment in Austria, it was taken up again in England, along lines suggested by Lenk, and various devices in washing and stabilizing were introduced, which tended to increase its stability. Its introduction as a blasting agent in England contributed much toward stimulating research in this direction and directly opened a market not in connection with war purposes.

3. In England, the first large factory, that of Hall Bros. at Faversham, exploded in 1847, killing every person employed on the place. On the 17th of the next July an explosion of 1,600 k. guncotton at Bouchet, France, devastated the sur-

macher [1] showed that it is the nitric acid alone in the mixed acids that combines with the cotton to produce the explosive form, while Ransome [2] analyzed the product. Bowman [3] first pointed out that property of the nitrate in becoming electrified when rubbed.

The work of Crum [4] is of especial interest aside from his exhaustive work on the cellulose nitrates on account of the fact that he invented the nitrometer and worked out simple methods of estimation of nitrogen based on its use. Gladstone [5] in 1847 was apparently the first to appreciate the value of accurate solubility determinations of the cellulose nitrates in various fluids, especially alcohol and ether. With advances in analytical chemistry the various stages of nitration were more accurately brought under control, accidents became less frequent and disastrous, while at present they are but of occasional occurrence.

For the preparation of the less highly nitrated celluloses for use in the arts in distinction from those of the highest nitration and intended solely for ballistic purposes, Berard in 1857,[6] Barnwell two years later,[7] and Henry the following year [8] made substantial advances, and did much to place its manufacture upon a more exact and stable basis. Parkes in 1865 and 1866,[9] and Daniel Spill in 1868 [10] pointed out the possibilities for many useful and ornamental products in which the nitric esters might profitably enter.

In fact, the earlier work was entirely along industrial lines, and the theoretical problems as to the structure of the various nitrates was but lightly touched upon. A number of deadly explosions in different countries of various cellulose nitrates, and the investigating committees appointed to determine their cause, were the principal factors which turned attention to research along theoretical lines.[11]

The Cellulose Nitrates. The earlier chemists who experimented with the nitrocelluloses adopted the formula $C_6H_{10}O_5$ for cellulose,

rounding country. These and other accidents temporarily destroyed the hopes of the committees appointed by the French and German governments, so much so that the French Commission after six years of continued experimenting reported that "in the present condition of things, there is no use in continuing the experiments. . . ." After Lenk had found some of the causes of previous failure and made the process of manufacture one of safety and profit, the English Government was attracted again, and aided by Gladstone, Miller, Frankland, and Abel, persevered until success was assured.

1. Mem. Chem. Soc., 1846, p. 253.
2. Lit. Phil. Soc., Manchester, 1846.
3. Phil. Mag., 1846, **28**, 500.
4. Proc. Phil. Soc., Glasgow, 1847, 163.
5. Mem. Chem. Soc., 1847, 412.
6. E.P. 1883, 1857, prepared a nitrate lower than guncotton, by immersing ½ lb. cotton in 5 lb. 5 oz. sulphuric acid and 2 lb. 6 oz. dry powdered niter and subsequently washing in running water until free from acid.
7. E.P. 945, 1859.
8. E.P. 1454, 1860.
9. E.P. 3163, 1865; 2709, 1866.
10. E.P. 3984, 1868; 3102, 1869.
11. See "British Association Committee on Guncotton" (1863), G. W. McDonald, Arms and Explosives, 1909, p. 23.

and consequently regarded "trinitrocellulose," $C_6H_7(NO_2)_3O_5$, as the highest obtainable ester,[1] while the next lower derivative, "dinitrocellulose," was considered to represent the composition of the lower or more soluble body. A "mononitrocellulose" was not definitely characterized, it being claimed that those who apparently obtained such a product were in reality dealing with a physical mixture of unaltered cellulose with the di- and tri-derivatives. At this time it was known that the tentatively accepted formula $C_6H_{10}O_5$ represented only the simplest expression for cellulose, but it was considered sufficiently comprehensive to express the various combinations with nitric acid, that is, the various compounds resulting from the introduction of the NO_2 group into the cellulose molecule.

However, Eder [2] obtained at least four degrees of nitration, and prepared products which apparently were well characterized. This necessitated doubling the expressions for the various cellulose nitrates, as Eder required the molecule of cellulose, $C_{12}H_{20}O_{10}$ to represent the various products he had succeeded in producing. The formula for the highest procurable nitrate was therefore raised to "hexanitrocellulose," although the percentage composition, of course, remained unchanged. Veielle,[3] however, working along similar lines, succeeded in producing a still larger number of derivatives, and in order to express them in chemical terms, was compelled to double Eder's formula, and thus make the highest obtainable nitrate a dodeca-derivative, and its formula expressed by $C_{24}H_{28}O_{20}(NO_2)_{12}$ from the parent cellulose molecule $C_{24}H_{40}O_{20}$.[4] The following table represents the percentage composition, and formulas of the different stages of nitration as exemplified by the researches of Eder and Veielle.[5] Mendelejeff, [6] by obtaining a product of 12.44% nitrogen, which was completely soluble in a mixture of ether and alcohol, came to the conclusion that he had produced a product intermediate between the deca- and ennea-nitrocellulose of Veielle, the latter having stated that the deca was soluble and the ennea insoluble in ether-alcohol.[7] On the basis of

1. The formula for this highest nitrate varied greatly with different experimenters. The formulas were derived either from analyses, or, more usually, from the increase in weight undergone by the cellulose during nitration. The formula of Pelouze (1846) was founded upon the increase in weight (68–70%) which cellulose underwent when acted upon by strong nitric acid, and without sulphuric acid.

2. Ber., 1880, **13**, 169. 3. C.R., 1882, **95**, 132.

4. By a study of those cellulose derivatives called bioses, where two $C_6H_{10}O_5$ groups unite with one molecule of water, Skraup prepared chlorine-acetyl derivatives whereby he has arrived at the decision that the simplest possible molecular weight of cellulose is 5,508, while that of starch is 7,440.

5. But Veielle, and later Lunge, could not obtain in a stable state the highest formation of nitrate, the dodeca-derivatives, theoretically possible.

6. Mon. Sci., 1897, 510.

7. From the present state of our knowledge it appears that a soluble (in ether-

this work, it was proposed to again double the formula for cellulose, the molecule containing C_{48}. The establishment by Lunge [1] and his coworkers [2] that a soluble decanitrocellulose exists, together with the fact that Mendelejeff did not give experimental proof that his product was free from homologous nitrates, has been considered insufficient evidence for placing the formula of cellulose at present greater than C_{24}.[3] Although the real formula is unknown, any classification of nitrates based upon the results of Veielle's researches, satisfactorily explains the phenomena of nitration, as so far observed.

Degrees of Nitration.	Formula	Degrees of Nitration, "Eder."	Formula.
1. Trinitrocellulose....	$C_6H_7O_5(NO_2)_3$	Hexanitrocellulose...	$C_{12}H_{14}O_{10}(NO_2)_6$
		Pentanitrocellulose ..	$C_{12}H_{15}O_{10}(NO_2)_5$
2. Dinitrocellulose	$C_6H_8O_5(NO_2)_2$	Tetranitrocellulose...	$C_{12}H_{16}O_{10}(NO_2)_4$
		Trinitrocellulose.....	$C_{12}H_{17}O_{10}(NO_2)_3$
3. Mononitrocellulose .	$C_6H_9O_5(NO_2)$	Dinitrocellulose.....	$C_{12}H_{18}O_{10}(NO_2)_2$
4. Cellulose.....	$C_6H_{10}O_5$	Cellulose.....	$C_{12}H_{20}O_{10}$

Degrees of Nitration, "Veielle."		Formula.	Nitrogen. Per Cent.	NO per .1 gm cc.
1.	Dodecanitrocellulose.....	$C_{24}H_{28}O_{20}(NO_2)_{12}$	14.16	225.53
	Endecanitrocellulose.....	$C_{24}H_{29}O_{20}(NO_2)_{11}$	13.50	215.32
	Decanitrocellulose.....	$C_{24}H_{30}O_{20}(NO_2)_{10}$	12.78	203.87
	Enneanitrocellulose.....	$C_{24}H_{31}O_{20}(NO_2)_9$	11.98	191.08
2.	Octonitrocellulose.....	$C_{24}H_{32}O_{20}(NO_2)_8$	11.13	177.52
	Heptanitrocellulose.....	$C_{24}H_{33}O_{20}(NO_2)_7$	10.19	162.53
	Hexanitrocellulose.....	$C_{24}H_{34}O_{20}(NO_2)_6$	9.17	146.26
	Pentanitrocellulose.....	$C_{24}H_{35}O_{20}(NO_2)_5$	8.04	128.24
3.	Tetranitrocellulose.....	$C_{24}H_{36}O_{20}(NO_2)_4$	6.77	108.01
4.	Cellulose.....	$C_{24}H_{40}O_{20}$	0.	0.

The Nitrates of Eder. Although difficult to prepare the individual nitrates without admixture of the higher and lower nitrated celluloses, Eder [4] gives the following as the general properties of the nitrates which he was able to obtain.

Hexanitrate (C_{12} formula). Prepared by the action of nitric acid of 1.52 sp.gr., and sulphuric acid of 1.84 sp.gr. mixed in about the proportion of 3 of nitric to 1 of sulphuric, and in this the cotton

alcohol) and insoluble form of deca-nitrocellulose exists, the former being produced by the formula H_2SO_4, 49.37%, HNO_3, 33.38%, H_2O, 17.25%.

1. J.A.C.S., 1901, **23**, 527.
2. Lunge, Weintraub and Bebie, Z. ang. Chem., 1899, **14**, 441.
3. Throughout the work, the formula with C_{24} will be adhered to.
4. Ber., 1880, **13**, 169.

immersed at a temperature not exceeding 10° for twenty-four hours. Yield, about 175% on the cotton employed. So prepared, the hexanitrate is soluble in nitrobenzene, insoluble in alcohol, ether or mixtures of them, in glacial acetic acid or in methyl alcohol free from acetone; soluble in acetone with difficulty; the most explosive form of guncotton, and used industrially only for ballistic purposes. Its ignition point varies between 160-170°. Ordinary guncotton may contain as high as 15% ether-alcohol soluble nitrates, the hexanitrate appearing to be the only cellulose nitrate quite, if not entirely, insoluble in alcohol-ether.

Pentanitrate. It is very difficult to prepare this nitrate in the pure state by the direct action of nitric acid on cellulose, either alone or in the presence of a dehydrating agent. According to Cross and Bevan [1] the best method is that devised by Eder, making use of the property discovered by De Vrij, that the hexanitrate dissolves in nitric acid at about 80–90°, and is precipitated by sulphuric acid as the pentanitrate when the mixture is cooled to zero or lower. It may be further purified by adding a large bulk of water, washing free from sulphuric acid, dissolving in ether-alcohol and again precipitating with water. This process is continued until the nitrogen content of the sample remains stationary upon further treatment. This nitrate is readily soluble in ether-alcohol or acetone, less so in acetic acid and insoluble in ethyl alcohol. Chloroform, carbon bisulphide or amyl acetate have but little effect upon it. It is readily reduced to the dinitrate by a strong solution of potassium or sodium hydroxide.

The tri- and tetra-nitrates, which are always prepared together on the manufacturing scale,—and are the nitrates of industrial importance,—are formed when cellulose is heated with a more dilute nitric acid, but at a higher temperature than that required to form the hexanitrate. The time is also reduced from twenty-four hours to one hour or less. On account of their equal solubility in ether-alcohol, acetone, amyl acetate, ethyl acetate, nitrobenzene, and the other latent solid and liquid cellulose nitrate solvents, it is difficult, if not impossible, to entirely separate one from the other. On treatment with concentrated nitric and sulphuric acids, additional nitrogen is taken on, and the penta- and hexanitrates result. Conversely, they are reduced to the dinitrate form by means of potassium or sodium hydroxides or alkaline sulphides or sulphydrates.

Cellulose dinitrate, as has been mentioned, may be formed by cautiously reducing the higher nitrates, or by the action of hot and dilute nitric acid upon cellulose. This nitrate dissolves readily in

1. Cross and Bevan, "Cellulose," 1903, 39.

acetone or ether-alcohol and is said to dissolve also in absolute ethyl alcohol. If so, this is probably a distinguishing test for this nitrate alone. The continual action of alkalis on the dinitrate in attempts to prepare the next lower nitrated body—the mononitrate—results in an entire decomposition of the cellulose molecule into organic acids and undetermined bodies.

Researches of Veielle.[1] More definite conclusions were reached by this chemist than obtained by Eder, due to the fact that Veielle made quantitative determinations at various stages of the nitration processes. From his experiments it appears that the most important factor in obtaining definite and controllable results is the concentration of the nitric acid, which was the principal variant investigated. The temperature was kept constant at 10–11°, and a large amount of nitric acid—from 125–150 times the weight of the cotton—was employed, in order that rise in temperature or dilution of acid would be reduced to a minimum and hence not affect the general results. The products which were analyzed by a modified Schloesing's method are expressed in cc. NO_2 gas at standard temperature and pressure, and calculated to 1 gm. of ester.

The table on following page contains a résumé of his results.

The length of exposure of the cotton was determined in each instance, and was always under control. Veielle found with the acid $HNO_3.\frac{1}{2}H_2O$ (1.488 sp.gr.) that after forty-eight hours' immersion, the product was still blued with iodine, and gave 161 cc. NO_2, but after sixty-two hours' treatment (when the iodine reaction could not be obtained), the product contained 165.7 cc. NO_2. He concludes that the explosive properties of the cellulose nitrates are in direct relation to the completeness of nitration, that with decrease of nitric acid absorbed by the cellulose molecule decrease in combustion results, and increase of carbonaceous residue as the final result. For practical purposes, the classification into three groups is made, the "guncottons," "collodions," and "friable cottons."[2] The stability decreases with decrease of nitric acid content, with respect to reagents such as hydrochloric acid and ferrous salts. With products of low nitration, the decomposition commences in the cold; with mean nitration a few minutes' heating is required, while with the products yielding

1. C.R., 1883, **95**, 132; Mem. des poudres et saltpêtres, **2**, 217; C.R., 1898, **126**, 1658. See also Brüley, Ibid. **8**, 111; Müller and Justin, Rev. chim., 1907, **10**, 263.

2. According to Veielle the measurement of pressures developed by the products in closed receptacles showed that the force diminishes correspondingly with a decrease of nitrogen. Thus a collodion cotton yielding 184 cc. NO_2 produced pressures inferior by one-fifth those furnished by a guncotton of 211 cc. Therefore the percentage of nitrogen constitutes a true measure of the explosive qualities of the nitrate.

more than 200 cc. nitrogen dioxide per gram, sustained ebullition is required to induce decomposition. These nitrates, then, appear to acquire a maximum of stability along with a maximum of power.

Density of HNO_3, 15°	Composition of the Acid.	No. of cc. of NO_2 Evolved by 1 gm. of the Nitrated Product, 0°; 760 mm.	Remarks.
1.502	HNO_3+1.5 H_2O	202.1	The nitrated product resembles cotton. It is completely soluble in acetic ether; very slightly soluble in pure ether or ether-alcohol.
1.497	" "	197.9	
1.496	HNO_3+1.68 H_2O	194.1	Soluble completely in acetic ether and in ether-alcohol. The fiber is not attacked. Collodion cotton.
1.492	" "	187.3	
1.490	HNO_3+1.85 H_2O	183.7	
1.488	HNO_3+2.7 H_2O	165.7	The nitrated product has the same appearance as cotton. It becomes gelatinous through the action of acetic ether and ether-alcohol. Solutions more gelatinous.
1.483	HNO_3+2.13 H_2O	164.6	
1.476	HNO_3+2.27 H_2O	141.1	Cotton dissolves in the acid; produces a viscous liquid precipitable by water. The product thus obtained swells up through the action of acetic ether and becomes gelatinous without dissolving. Ether-alcohol produces no effect.
1.472	" "	140.0	
1.469	HNO_3+2.50 H_2O	139.7	
1.463	HNO_3+2.50 H_2O	128.6	The product is extremely friable, and is collected in the form of a paste. Neither acetic ether nor ether-alcohol produces any effect upon it. Strongly colored by I in KI solution.
1.460	HNO_3+2.76 H_2O	122.7	
1.455	" "	115.9	
1.450	HNO_3+3.08 H_2O	108.9	
1.442	HNO_3+3.08 H_2O	108.9	Residue becomes more and more friable, and is strongly blackened by the action of iodine solution. Nitration, insignificant.
1.430	" "		

All investigators[1] have found it impossible to introduce more than twelve substituted groups into the cellulose molecule of $C_{24}H_{40}O_{20}$.

Investigations of Lunge. In conjunction with Bebie[2] and Weintraub,[3] investigations were undertaken to study the conditions whereby cellulose nitrates of varying composition and properties could be prepared with certainty, and to establish both the products

1. Ost, Z. ang. Chem., 1906, **19**, 992; J.S.C.I., 1906, **25**, 606; Green and Perkin, J.C.S., 1906, **89**, 1911; J.S.C.I., 1906, **25**, 652.
2. J.A.C.S., 1901, **23**, 528; Z. ang. Chem., 1901, **14**, 483; C.N. 1901, **84**, 301.
3. Z. ang. Chem., 1899, **12**, 393, 441, 467.

as to their composition and properties which would result from the variation of the different constituents in the nitrating fluid, so that the solubility and nitrogen content of a nitrocellulose could be calculated with a reasonable degree of accuracy in advance of production. As a source of cellulose, they used "chemically pure surgical cotton wool," last traces of fat being removed by boiling in dilute sodium carbonate solution, drying and extracting with ether. The cotton was dried at 100° until no further loss in weight occurred and kept in a desiccator until used. The ash averaged 0.06%.[1]

The highest stage of nitration was obtained by using 2.5 gm. cellulose, 30 gm. nitric acid (sp.gr. 1.52) and 90 gm. sulphuric acid (sp.gr. 1.84) at a constant temperature of 15° during twenty-four hours, the nitrogen content varying from 13.37–13.4% which approaches closely (13.50%) to the endecanitrocellulose, and accords with the highest nitrogen product of Veielle (13.42%),[2] Eder (13.91%)[3] and Vignon (13.35%)[4]. Variation of the temperature within the limits 0–40° did not produce higher nitrogen percentages, from which the conclusion is reached that the endecanitrate is the maximum obtained by nitration with a mixture of nitric and sulphuric acids. Increasing the quantity of sulphuric acid lowered the nitrogen content, while decreasing it caused a slight rise in nitrogen. However, by using the method of Hoitsema[5] a nitrate containing 13.90% was obtained, sufficiently near to the percentage for dodecanitrate (14.16%).[6] However, in later experiments with Bebie, Lunge demonstrated that with acid mixtures containing as high as 11.31% water, a product containing 13.8% nitrogen can be obtained, which, however, is not stable but gradually loses nitrogen until 13.5% nitrogen is reached, but remained perfectly constant at this point. It appears, therefore, from this investigator's work, that the endecanitrate is the highest stable form. The important observation was made and experimentally corroborated, that by lowering the proportion of water to a minimum,[7] the percentage of nitrogen in the product is not raised, and that it is therefore useless to increase the expense in nitration by employing mixtures too high in total acid.

The influence of water on the nitrating process was determined

1. The acid mixtures in each instance were made from weighed quantities of "chemically pure" sulphuric acid sp.gr. 1.84, and fuming nitric acid sp.gr. 1.52, the former showing 95.62% H_2SO_4, the latter 93.76% HNO_3, and from 1–2% lower oxides of nitrogen which were removed in the ordinary way.

2. C.R., 1883, **95**, 132. See also L. Vignon, C.R., 1903, **136**, 818.

3. Ber., 1880, **13**, 176.

4. C.R., 1898, **126**, June 6.

5. Z. ang. Chem., 1898, **11**, 173; abst. J.S.C.I., 1898, **17**, 374.

6. H.N. Warren, C.N., 1896, **74**, 239; formation of "tetranitrocellulose" from the trinitro- and phosphoric anhydride has never been corroborated.

7. Which was affected by the addition of fuming oil of vitriol.

by keeping the nitric and sulphuric acids practically constant,[1] and varying only the water content.[2] The results are appended in the following table:

No.	Nitrogen. Per Cent.	Soluble in Ether-alcohol.* Per Cent.	Yield Cotton. Per Cent.	Acid Mixture in Per Cent.		
				H_2SO_4	HNO_3.	H_2O.
1	13.65	1.50	177.5	45.31	49.07	5.62
2	13.21	5.40	176.2	42.61	46.01	11.38
3	12.76	22.00	.....	41.03	44.45	14.52
4	12.58	60.00	167.0	40.66	43.85	15.49
5	12.31	99.14	159.0	40.14	43.25	16.61
6	12.05	99.84	153.0	39.45	42.73	17.82
7	11.59	100.02	156.5	38.95	42.15	18.90
8	10.93	99.82	144.2	38.43	41.31	20.26
9	9.76	74.22	146.0	37.20	40.30	22.50
10	9.31	1.15	138.9	36.72	39.78	23.50
11	8.40	0.61	131.2	35.87	38.83	25.30
12	6.50	1.73	.....	34.41	37.17	28.42

* Two parts ether and one part alcohol is intended when "ether-alcohol" is specified.

As is shown by the third column and might be expected, the products obtained were not chemically pure, but mixtures of various stages of nitration. The above results show the fallacy of attempting to judge of the ether-alcohol solubility of a cellulose nitrate from the nitrogen content. As these results indicate that a difference of a few per cent of water may produce greatly differing stages of nitration, the explanation becomes clear that various nitrocelluloses must be produced where there is a chemical production of free water, and to minimize this variation the percentage of water so formed may be diminished by a large volume of nitrating acid, the variations decreasing with an increase in volume of acids.[3] No. 5 in the above table is a formula for the production of a collodion completely soluble in ether-alcohol and suitable for the production of photographic films, although the high percentage of nitric acid makes it an expensive mixture. From this table it appears that the group of entirely soluble cellulose nitrates, with a range of 12.31–10.93% N, is obtained from acid mixtures ranging from 16.6–20.3% water, and that the typical collodion cotton (octonitrocellulose of 11.13% N) requires 19.3% water

1. Thus introducing but one variable (water), whereas Veielle introduced two (water and nitric acid) and his results must therefore have depended upon both conjointly.

2. The small amount of water in the highest concentrations was made possible by adding free sulphur trioxide in the form of fuming sulphuric acid. The temperature, duration of reaction, and proportion of cellulose to reacting mixture were kept practically constant.

3. For this reason preparation of the cellulose nitrates by a centrifugal is of advantage inasmuch as the proportion of cotton to acid is as 1 : 50–55.

in the acid mixture.[1] Below 10% N, it is seen, the solubility rapidly diminishes, while if the acid mixture contains 25% water or more, much unchanged cotton is left. In the beginning, there is but little nitration, but much oxycellulose formed.[2] The morphological structure of the nitrate is greatly altered by an increase of water in the acid mixtures, above 18% water the fibers showing disintegration, the destructive action being at the maximum with 25% water.

In determining the influence of temperature on the nitrating process, it was found that rise in temperature rapidly increases the speed of the process, while the percentage of nitrogen decreases when passing from 15–40°, but remains practically constant when nitrating from 60–80°. By nitrating at higher temperatures the cellulose structure is materially changed and passes into solution in the reacting mixture. Best results in the production of a nitrate of 99% solubility in ether-alcohol was obtained by nitrating four hours at 40° in sulphuric acid 38.95%, nitric acid 42.15%, water 18.9%. In varying the proportion of sulphuric acid to nitric acid, Lunge found that with increase of the former the speed of the process rapidly decreased up to equal parts of each acid, while the maximum of nitrogen in the product is produced, if the proportion of sulphuric to nitric acid be not less than 1:4 nor greater than 3:1. Furthermore, above a certain proportion of sulphuric to nitric acids (approximately 8:1) the final product always contains cellulose, while an excess of sulphuric acid affects also the structure of the cellulose nitrate. In general, however, the larger the quantity of sulphuric acid in the nitrating fluid in comparison to the nitric acid, the slower the entire process is completed. Lunge's work showed that for the preparation of cellulose nitrate of practically complete ether-alcohol solubility, the proportion of equal parts of nitric and sulphuric acids with 19–20% water in the mixture should not be exceeded. In corroboration of Bronnert[3] and Vignon,[4] it was noted that more dilute acid mixtures evidently resulted in the formation of oxycellulose, if not some nitro-oxycellulose.[5] Of the cellulose nitrates obtained in the usual manner,

1. The author is aware of substantially this formula having been used commercially by means of centrifugal nitration and with excellent results as regards uniformity in ether-alcohol solubility.

2. This may be shown by the entire or partial solubility in dilute alkalis; precipitation from solution by acids or alcohols; intense coloring with basic dyestuffs; reduction with Fehling's solution and reaction with phenylhydrazine.

3. Bull. de Mulh., 1900.

4. C.R., 1900, **131**, Sept. 10.

5. For each test 0.5 gm. of the product under examination was heated on the water bath with 150 cc. of 0.5% solution methylene blue for an hour, and after cooling 100 cc. compared with an equal volume of the original solution in a Lummer-Brodhühn colorimeter, to ascertain the loss of coloring matter. The results obtained indicated that the products formed with concentrated acids contain no oxycellulose,

products soluble in ether-alcohol may be obtained from 10.19% N (hepta-) up to decanitrocellulose (12.78% N), but the collodion and pyroxylin of commerce used for lacquers and artificial leathers and silk, range between hepta- and ennea-nitrocellulose (11.98% N), and where complete solubility is desired, nitrogen percentages from 11–11.5, with formula No. 7 in the preceding table.[1] The proportion of lower oxides of nitrogen in the nitrating mixture had little, if any, influence on the yield or nitrogen percentage of the resulting product, as is indicated by the following results, in which the question of stability does not enter:

No.	NO_2 Per Cent.	Nitrogen in Guncotton, Per Cent.	Yield, Per Cent.
1	0.13	13.55	174.53
2	0.99	13.50	175.02
3	1.84	13.56	173.98
4	5.15	13.56	175.60

While the presence of oxides of nitrogen in the products of Lunge did not decrease the stability as determined by the methods of Abel and Guttmann, it must be remembered that free nitrogen peroxide in the liquid form has a very destructive action upon cellulose.[2] These investigations in their entirety form one of the most valuable contributions to the subject of the formation of the cellulose nitrates.

E. Berl and R. Klaye[3] have contributed to the knowledge of strongly nitrated celluloses, hydrocelluloses and oxycelluloses, in order to make clear, if possible, the constitution and size of the cellulose molecule and the number of isomers to which its esters and colloidal products may give rise. With this end in view, the authors have studied the nitrates having a content of 13.5% N, or inclosing 11 NO_2 groups for each $C_{24}H_{40}O_{20}$ molecule. The authors have

while dilute acids did result in its formation. The same result was obtained with Schiff's aldehydic group reagent—a solution of fuchsine decolorized by sulphurous acid.

1. A number of interesting experiments were made to determine the limits of ether and alcohol which could be varied from the 3 : 1 formula and still dissolve the nitrate. A 11.54% N-containing ester dissolved readily in 6E : 1A, only 95% in 12E : 1A, in the last case 324 cc. ether to 26 cc. alcohol being required to dissolve 1 gm., which 26 cc. alcohol alone would not have done. 27E : 1A dissolved but 7.3% when 1 gm. was treated with 350 cc. combined solvent. In the other direction 1E : 3A acted as a complete solvent, 1E : 6A dissolved 93%, 1E : 5A dissolved 95%, all of which goes to show that the proportions of these two liquids may be combined within widely varying limits from the commonly accepted proportion.

2. 100 gm. liquid nitrogen tetroxide acting on 8 gm. pure cotton during three days in a refrigerator, converted it entirely into a viscid mass mostly soluble in boiling water. The solution reduced Fehling's solution on boiling, and reacted with phenylhydrazine, and lead, silver and barium salts.

3. Mon. Sci., 1910, (4), **24**, 103.

prepared for nitration, pure fat-free cotton cellulose; sulphuric acid and hydrogen dioxide hydrocelluloses; and potassium permanganate, bromine, nitric acid, potassium chlorate and calcium hypochlorite oxycelluloses, and they give in tabular form the authorities for the compositions used in the preparation of their substances, the proximate analyses of the products and their physical and chemical properties. These various derivations were then nitrated and the products examined by physical and chemical methods, the results being set forth in tables and graphic diagrams, showing that the authors have made a comparative study of the hydrocelluloses and oxycelluloses previously known; have prepared a new oxycellulose by treating cellulose in the cold with calcium permanganate; have formed the nitric esters of these substances under identical conditions and subjected them to comparative study; have demonstrated that the nitrate containing 13.5% N, obtained at ordinary temperatures, is a true nitric ester of cellulose; have shown that under these conditions the hydro- and oxy-cellulose nitrates obtained contain less N than the cellulose nitrate does; that the solubilities of the hydro- and oxy-cellulose nitrates in ether-alcohol is the same as that of the cellulose nitrate; that the absorptive powers of the hydro- and oxy-cellulose nitrates for methylene blue is much greater than that of cellulose nitrate; that the unnitrated materials fix much more methylene blue than their nitrates do; that the viscosities of acetone solutions of cellulose nitrates augment, for the same temperature and equal duration of nitration, with the N content; that the viscosities of acetone solutions of pure cellulose nitrates are superior to those of the hydro- and oxy-cellulose nitrates of the same N contents; and that the treatment of cellulose with hydrolyzing or oxidizing agents causes a breaking up of the complex cellulose molecule.

C. Piest [1] has studied the influence of the prior treatment of the cellulose on the properties of the cellulose nitrates derived from it, when working with large quantities. For this purpose he has nitrated cotton which has been exposed for forty-eight hours in a bleaching powder solution of 3.5° Bé. or exposed for eight days to

1. Z. ang. Chem., 1908, **22**, 1215. For action of solutions of sodium hydroxide, barium hydroxide and ammonium sulphide on cellulose nitrate, see Piest, Z. ang. Chem., 1910, **23**, 1009. E. Berl and A. Fodor (Z. ges. Schiess- u. Sprengstoffw., 1910, **5**, 254, 269) have studied the nitrogen products formed by alkaline hydrolysis of cellulose nitrates, recording observations with dilute aqueous sodium carbonate, alcoholic KOH, and ammonium sulphide. The complete hydrolysis in alcoholic solution was shown to produce, as an intermediate product, a cellulose nitrate soluble in ether. When hydrolyzed with ammonium sulphide, the lactone of hexonic acid was formed. Cellulose nitrate in acetic acid, when heated for two hours with phenylhydrazine or *p*-bromphenylhydrazine, formed a phenylhydrazine derivative with cellulose nitrate of the formula $C_{24}H_{33}O_{13}(NO_3)_5$.

bleaching powder solutions containing respectively 2.5 and 5 k. to 5 l. of water, or mercerized by treatment with 18.5% sodium hydroxide solution for twenty minutes, or heated ten hours at 150° in a current of carbon dioxide. Using a certain described nitrating acid mixture, the nitrated product obtained from the cotton treated by bleaching powder solutions and by sodium hydroxide solutions had a lower N content and a much higher solubility in ether-alcohol than nitrated cellulose from ordinary cotton. The product from the cotton heated in carbon dioxide has a higher N content than that from ordinary cotton and about the same solubility in ether-alcohol and absolute alcohol. The solubility of the product of the bleached cotton in absolute alcohol increases the more the cotton is bleached, and the stabilized material is more soluble in ether-alcohol, than the non-stabilized, but stabilizing is difficult with the strongly bleached cotton product. It is more difficult to stabilize the products of any of these processes than those from ordinary cotton.

Theory of Nitration. No satisfactory general scientific theory connecting the composition of the mixed acids, temperature and degree of nitration, with chemical constitution has as yet been enunciated. The difficulties in the way of such a generalization are as follows: The absolute molecular weights of cellulose and the cellulose nitrates are unknown. No cellulose nitrate as a distinct chemical individual has as yet been prepared and investigated, due to the fact that in the nitration process the increment of nitric acid in the cellulose molecule is progressive and by indefinite stages, and a series of nitrates always results. The laws of mass action cannot be applied to the system of acid mixture and cellulose nitrate, on account of entire absence of homogeneity. And finally, the complexity of the reacting mass, containing in some instances, in addition to cellulose, acids, water and nitrated cellulose, hydrocellulose and oxycellulose and the nitrates therefrom, and sulphonic and nitrosulphonic acid esters. No cellulose nitrate or derivative therefrom has as yet been prepared in a crystalline state. No cellulose nitrate has been distilled or vaporized unchanged. We see, therefore, that the usual expedients of purification preceding a general examination and isolation have as yet to be overcome with this class of esters. Saposchnikov [1] has embodied his investigations of the mixed nitrating acids with respect to their individual constituents in a series of curves, whereby the vapor tension of nitric acid in the nitration fluid with the composition of the entire mixture has been elucidated.[2] In a second series of experi-

1. J. Russ. Phys. Chem. Soc., 1906, **38**, 1186, 1192; abst. J.C.S., 1905, (2), 583; 1906, (1), 68; J.S.C.I., 1907, **26**, 34; 1909, **28**, 747.

2. J. Russ. Phys. Chem. Soc., 1904, **35**, 669, 1098; 1905, **36**, 518; Chem. Centr.,

ments[1] the relationship of the degree of nitration obtained with mixed acids under parallel conditions, i.e., the molecular proportions of the ingredients present in the mixed acid, has apparently been established.[2] In attempts to prepare a cellulose nitrate in a pure state, Rassow and V. Bonge[3] used the purest Schleicher & Schuell filter paper, HCl, HF, and ether extracted, apparently free from unaltered cellulose, which was nitrated with a mixture of 99.7% nitric acid and 100% sulphuric acid, but the results were conflicting.[4] The cellulose molecule appears to be an aggregate in which according to the amount of nitric acid introduced, higher or lower nitrated products result, and in which the change in composition goes on without a break, provided the conditions are suitable. This hypothesis is the only satisfactory explanation of the various anomalies observed by investigators of irreproachable integrity, not only in the nitration of cellulose

1904, **1**, 1322; **2**, 396, 685; J.S.C.I., 1904, **23**, 865. In J. Russ. Chem. Soc., 1906, **38**, 1192; 1903, **35**; 1904, **36**; 1905, **37**; he finds that on continually adding sulphuric acid to nitric acid of a definite strength, the vapor pressure of the HNO_3 continually increases and reaches a maximum at a point corresponding to a system $HNO_3+n(H_2SO_4H_2O)$. At this point the partial pressure of the nitric acid is identical with that of anhydrous acid mixed with the same proportion of pure H_2SO_4. Where nitric acid (sp.gr. 1.52) was used alone, a cellulose nitrate of 12.06% N was obtained, with 10% sulphuric acid, 13.35% N, due to the removal of some of the higher oxides of nitrogen by the sulphuric acid in converting them into non-volatile products, thus raising the vapor pressure of the HNO_3 itself. Further addition of sulphuric acid up to 80% gave practically the same product with 13.2–13.36% N. With higher percentages of sulphuric acid, nitration became impossible. In a mixture of 10 parts HNO_3 and 90 parts H_2SO_4, cotton dissolves without residue and no appreciable amount of solids can be obtained even after pouring the mixture into a large volume of cold water. He has found that the degree of nitration depends only upon the strength of the nitric acid present in the mixture, and not upon its relative amount, changes in the temperature of the nitrating fluid having no effect upon the maximum of nitration. Water present in the reaction prevents the conversion of the HNO_3 into N_2O_5 by the H_2SO_4, and furnishes an ester less liable to decomposition and loss of N during the subsequent thorough washing with water. His results show distinctly that sulphuric acid dehydrates nitric acid containing water, and makes it thereby more active for the purpose of nitration.

1. Seventh Int. Cong. App. Chem., London, 1909. In this communication the two series of curves have been combined by the method of co-ordinate triangulation, when a clear idea of the conditions governing any desired degree of nitration may be obtained.

2. See "Kinetics of Nitration," Haavard Martinsen, Z. Phys. Chem., 1907, **59**, 605; 1904, **50**, 385; also Berl and Klaye (Z. ges. Schiess. u. Sprengstoffw. 1907, **2**, 403; J.S.C.I., 1907, **26**, 1157), have shown the nitration process to be a reversible reaction: $C_{24}H_{40}O_{20}+nHNO_3 \rightleftarrows C_{24}H_{40-n}O_{20-n}(ONO_2)n+nH_2O$, and find that after a certain maximum substitution has been attained the sulphuric acid of the nitrating mixture acts as a hydrolizing agent. Also Berl and Smith, Ber., 1907, **40**, 903; J.S.C.I., 1908, **27**, 535.

3. Z. ang. Chem., 1908, **21**, 732.

4. They found that to obtain an ester perfectly insoluble in water the mixture used must contain 7 parts sulphuric acid for at least 1 part nitric acid. The nitrate thus prepared contained 37.8% unchanged cellulose. With anhydrous acids it was found impossible to obtain such highly nitrated products as with commercial acids. The solubility of the products in the usual cellulose nitrate solvents was small when prepared with anhydrous acids.

and the solubility of the various nitrates in stated fluids, but also in the physical deportment of the solutions themselves, strikingly exemplified in their solubility and viscosity. The author suggests a fruitful method of attacking the problem in the fractional precipitation of commercial nitrates in solution.

Much experimental proof has been given in support of the opinion that the mixture of sulphuric and nitric acids results in the first instance in an attack on the cotton by the sulphuric acid similar to that formed in the preparation of vegetable parchment, and that the nitric acid subsequently replaces the sulphuric acid in the reacting cellulose. It is a fact, however, that in the system, cellulose, sulphuric acid, nitric acid and water, each endeavors to carry out "its characteristic function," the sulphuric acid to dissolve (the cellulose), the nitric acid to form nitric esters,[1] and the water to hydrate or hydrolize,[2] depending upon the amount present in the mixed acid.

Commercial Nomenclature of Cellulose Nitrates. The greatest confusion exists as to definiteness in nomenclature of the various cellulose nitrates, but few of the names proposed having a definite signification. There is to be found in the literature no logical classification based upon name only, due to the fact that the same name is apparently used for a variety of products as judged by nitrogen content and ether-alcohol solubility.

"Guncotton," "explosive cotton," and "ballistic cotton" are terms nearly always applied to the highest nitrated celluloses, which are practically insoluble in ether-alcohol, and intended solely for ballistic purposes.

"Pyrocollodion"—in the United States, at least—is applied to that form of cellulose nitrate practically entirely soluble in ether-alcohol and of about 12.6% nitrogen.

"Collodion," "collodium," "colloxylin," "photocotton," "negative cotton," "sensitive cotton," "photoxylin," "adhesive cotton," "protective cotton," "ether glue," are names introduced during the use of these esters in pharmacy and photography, and in general indicate those lower nitrates which are soluble in ether-alcohol. But endecanitrocellulose has been produced soluble in this

1. Hake and Bell, J.S.C.I. 1909, **28**, 458.

2. Crane and Joyce, J.S.C.I., 1910, **29**, 542. They consider the mechanism of the reaction as follows: "The sulphuric acid dissolves the cellulose, forming sulphuric esters. These are decomposed into hydrates by the water and are also converted into nitrates by the nitric acid. The progress of this reaction is indicated by the increased percentage of nitrogen and the decrease of combined sulphuric acid in the product obtained with an acid temperature of 10° over that nitrated at 50°. Increase of the rate of reaction causes a decrease of the intermediate product and tends towards a completion of the formation of the final product, the hydrated cellulose nitrate."

mixed solvent, and the lower nitrates (hepta and octa) have been prepared which are practically insoluble in ether-alcohol. Furthermore, ether-alcohol is used less at the present time as a general solvent in the production of photographic films.

"Celloidin" and "photoxylin" are trade names for purified cellulose nitrates used principally as imbedding media in histology and microscopy.

"Xylonite," "zylonite," "fiberloid," "pyralin," "viscoloid," "celluloid," "Arlington paste," "cellonite," "pyrantin," "pasbosene," are camphor-containing cellulose nitrate plastics.

"Pyroxylin"[1] by common consent in the United States is applied to those cellulose nitrates soluble in amyl acetate and commercial wood alcohol, and used for lacquers, waterproofing solutions, leather compositions and artificial silk manufacture. The nitrogen content varies from 10.5–12.2%. "Friable cotton," "friable collodion" is a loose expression applied to cellulose nitrates of low nitration.

A description of a cellulose nitrate sufficiently specific for duplication must contain: (*a*) a statement of the percentage of nitrogen; (*b*) degree of solubility in a named pure solvent; and (*c*) viscosity of a given weight in a specified, neutral liquid at a named temperature and by a stated method. The omission of any one of the above three-named specifications, renders impossible the duplication of the product from description alone.

Cellulose used for Nitration. It has been stated, and probably correctly, that at least 95% of the cellulose nitrated consists of some form of cotton. In general, the purer the cellulose used, the less difficulty in nitration and subsequent elimination of the acid, the higher the yield, and the more stable the nitrate formed. There is an economic limit, however, to the cost of the cotton which can be used, due to keen competition. The higher grades of Sea Island and Egyptian long-fiber cottons are never used, mainly on account of the cost of the raw material. Tissue paper which finds extensive use with the celluloid manufacturers and producers of fine pyroxylin lacquers will be subsequently mentioned. The skeins of long stapled yarn used by von Lenk were undoubtedly of high purity and unusually free from waxy matters and inorganic constituents. At the same time, however, the fact that the skein condition was maintained throughout the entire nitration and purification process made it much more difficult and tedious to free the nitrocotton from the subsidiary products of the nitration process. The reduction of the cotton fibers

1. "Pyroxiline" (Ure. Dict. Arts and Manufactures, 1853, **2**, 532) is the name applied to a substance detected in pyroxylic spirit (the old name for wood alcohol).

to extremely short lengths in the pulping treatment removes in a great measure this difficulty.

Ordinary cotton waste is the principal form of cellulose used in the United States at the present time to produce the cellulose nitrates of industrial importance as distinguished from the higher nitrates used for explosives and as propulsive agents. This waste as obtained from the mills is in a very impure state, but so great has the consumption of this form of cotton become, that a separate industry has sprung up for the purpose of converting this mill waste into a form and purity suitable for nitration. The processes to which it is subjected are: degreasing by means of extraction with solvents, usually benzine or carbon tetrachloride; scouring, bleaching, and washing. The effect of these treatments, when properly carried out, is to produce a fairly pure and resistant short-fiber cellulose, and these processes have now reached such a high state of perfection that it is not unusual to procure cottons of an ether-extract of not over 0.2%, and practically free from hydro- and oxy-cellulose. Cellulose nitrates of as high degree of purity as regards application of the heat test are not required for the production of photographic films and lacquers, and a mixed cotton waste can be used. The chief disadvantage of containing bits of wood, rubber, and other foreign bodies, is being overcome by improved methods of mechanical separation of these impurities[1] the presence of which, no doubt, are important sources of decreased stability. The fact that cotton waste is plentiful, easily procured and reasonably cheap, and can be depended upon to produce a nitrate satisfactory as regards nitrogen content and solubility, gives it preference over other sources of cellulose. Some have claimed that cotton produced in a cold, wet season, in which the growth has been slow, as indicated by the thickened cellular wall and smaller canal, does not nitrate or neutralize as readily as a cotton grown in a favorable locality as regards humidity and high temperature, where the microscopic examination shows a thin-walled tube with a larger lumen. However, in practice no variation in the nitrating process is

1. So-called weaving-mill waste is a material composed entirely of woven cotton fabric, often of pieces of underwear and stockings, partly broken down by mechanical means. It differs materially in character, and as obtained contains starched and unstarched pieces. It is also apt to be overbleached and contain an undue amount of altered cellulose. In its best form it is a pure cotton cellulose and makes excellent pyroxylin, especially as regards yield, the large pieces retaining perfectly their shape during the nitrating process. It is at present difficultly procurable, and its cost is higher than the normal price of cotton waste. The short fiber from the cotton seed or the "combings" from cotton thread spinning and twisting, would no doubt make excellent material, if it could readily be obtained free from dust and particles of the seed husk. As it appears difficult to entirely remove the husk by mechanical means without subjecting to drastic chemical treatment, it is not used to any considerable extent.

made as the result of the microscopical structure of the individual cotton fiber. Cotton waste has been used since the early days of guncotton manufacture.

In regard to the structure of the cellulose fiber as influencing ease of nitration, F. Nettleford says [1] "it will be readily understood that the thin side-wall tubes of the cotton fibers are readily penetrated by the mixed acid, as compared with flax or other hard-walled fibers. In the latter, the walls are comparatively thick, and the central canal small," and the fact noted that flax is more difficult of nitration and subsequent neutralization is undoubtedly due to the variation in microscopal structure. New Zealand flax gives the most perfectly fluid nitrates of any of the flaxes, it is claimed. It is therefore evident, that a given fiber requires an adaptation of the nitrating method to accord with the structure of its filaments, and in the most compact cells, as in certain evergreen trees, the ligneous fibers are very difficult of penetration.

Lunge,[2] who has examined the subject experimentally, "procured from the leading cotton mills in Switzerland authentic samples of the most varying grades of cotton, which were carefully cleaned mechanically and washed in the same way as in the manufacture of guncotton and nitrated with the same acid mixture (63.84 sulphuric, 16.96 nitric acid, 19.20 water), keeping all the conditions of the experiments exactly alike. Together he nitrated a sample of 'chemically pure surgical cotton wool,' with the following results:

No.	Commercial Designation.	Nitrogen. Per Cent.	Solubility in Ether-alcohol. Per Cent.	Yield. Per Cent.
1	Chemically pure surgical cotton wool.....	11.76	100	159
2	American cotton "middling fair".....	11.56	100	157
3	American cotton "Florida".....	11.67	100	153
4	Egyptian cotton, white, "Abassi".....	11.69	100	155
5	Egyptian cotton, natural yellow.....	11.61	100	154

"This shows that there is no essential difference in the quality of the collodion cotton obtained from these extremely differing grades of cotton. They are all completely soluble; the nitrogen differs only by 0.13% among all the commercial cottons, and only by 0.20 *in maximo* against the pure surgical cotton. The latter is easily

1. Chem. News, 1887, **55**, 306. Wolfram (Ding. Poly., 1878, **230**, 45) finds that concentrated acids give with cellulose from various sources the same final product, but with dilute acids, nitrating under the same conditions, cotton is the most readily attacked, then hemp, paper, straw and linen.

2. J.A.C.S., 1901, **23**, 578.

explained by the difference in purity, the surgical cottons containing only 0.05% ash, the commercial cottons averaging 0.5% ash."

Notwithstanding the above, it is the practical experience of manufacturers covering a number of years, and in which several hundred pounds of collodion nitrocotton was daily produced, that there is a great difference in the facility with which various kinds of cotton can be nitrated, and the ease with which the acid may be removed after nitration. The tendency to "burn" or fume in the nitrating bath, and toughness of cotton after nitration, are properties apparently sufficiently inherent in the cotton itself to differentiate one grade of cotton from another.

U. S. Ordnance Requirements. The requirements of the Ordnance Department of the United States Army, as Revised April 18, 1908, prescribe that the cellulose prepared for nitrating must be bleached cellulose, which will be obtained by purifying unspun cotton wastes, and thoroughly washing to remove purifying materials or salts;[1] containing not more than 0.7% extractive matters; not more than 1.25% ash; of uniform character, clean and free from such lumps as will prevent uniform nitration.

"The extractive matter is determined by extracting about 1.5 gm. of cotton in a Wiley extractor with ethyl ether, and weighing extracted matter after drying at 100°. The percentage is calculated on dry cotton.

"Ash is determined by digesting about 1 gm. of cotton with a little pure nitric acid and incinerating at a red heat, weighing residue and calculating percentage on dry cotton. Moisture is determined by drying about 3 gm. of cotton at 105° to constant weight.

"*Mixed acids for fortifying.* A mixture of sulphuric and nitric acids will be used, containing no metallic salts, other than salts of iron, and only a trace of chlorine compounds.

1. The acetone to be used in the preparation of the English explosive "cordite" must conform to the following requirements:

"1. The acetone to be not more than 0.802 sp.gr. at 60° F. When mixed with distilled water it must show no turbidity, and must leave no residue on evaporation at 212° F. On distillation, four-fifths by volume of the quantity taken must distill over at a temperature not exceeding 138° F. The residual matter left after this distillation must not contain, besides acetone, any ingredient that is not a by-product incidental to the manufacture of acetone.

"2. One cc. of 0.10% solution in distilled water of pure permanganate of potash, added to 100 cc. of the acetone, must retain its distinctive color for not less than thirty minutes. This test should be made at a temperature of 60° F.

"3. The acetone tested by the following method must not show more than 0.005% of acid, calculated to acetic acid:

"To 50 cc. of the sample diluted with 50 cc. of distilled water, with 2 cc. of phenolphthalein solution (1 gm. to 1,000 cc. of 50% alcohol) added as an indicator, add from a burette $\frac{N}{100}$ sodium hydrate solution (1 cc. = 0.0006 gm. acetic acid), and calculate to acetic acid in the usual manner."

"*Ether.* Ethyl ether will be used containing no impurities except small quantities of ethyl alcohol and water; to be clear and colorless; with characteristic pure odor; having less than 0.006% acidity, calculated as acetic acid; sp.gr. at 20°, 0.717–0.723; having less than 0.002% residue after evaporation and drying at 100°. The sp.gr. is determined by weighing a calibrated ½-l. flask filled with ether, at a temperature determined by a thermometer in the flask.

"*Alcohol.* Ethyl alcohol 92.3% absolute (by weight) will be used; of best quality; clear and colorless; having characteristic, pure odor; having less than 0.006% residue after evaporation and drying at 100°; having acidity less than 0.01% calculated as acetic acid. It shall be subjected to the silver nitrate test as follows: 3 gm. silver nitrate, c.p., 3 gm. NaOH, c.p., 20 gm. NH_4OH, c.p. (sp.gr. 0.90). Make up to 100 cc.; 10 cc. of the sample diluted with 10 cc. water are placed in a tight bottle, to which is added 1 cc. of the silver nitrate solution. Allow to stand one hour in the dark and examine for unreduced silver salts in clear solution, after filtering. If such are found the alcohol contains less than the allowable amount of aldehyde. The sp.gr. is determined by weighing a calibrated ½-l. flask filled with alcohol, at a temperature determined by a thermometer in the flask. The strength of alcohol is calculated by the use of the alcohol tables given in the latest edition of Allen's 'Commercial Organic Analysis.'

"*Carbonate of Soda, Soda Ash.* The best quality of refined alkali, free from sulphides, containing at least 96% Na_2CO_3, calculated on dry sample, will be used."

Properties. It is impossible to tell cotton from nitrated cotton or the various cellulose nitrates among themselves by inspection alone. Without taste or smell, it preserves perfectly the appearance of the cotton from which it is made, being, however, harsher to the touch, and gives out a slight crackling sound when compressed. When rubbed, especially at a moderately warm temperature, its fibers become strongly electrified, and will adhere to the hand.[1]

Density. Statements of the density of cellulose[2] and cellulose nitrate[3] vary materially, due probably both to the method of deter-

1. Plates for static electric machines have been constructed by dissolving nitrated cellulose, forming large sheets or films and pressing these together into a plate, after which they are cut or sawed into the desired shape and thickness. (See Chapter XIV.) R. Fortun and E. Semprun (E.P. 8280, 1901) have devised a process for making separators for use in a secondary galvanic battery, by superficially nitrating sheet cardboard, and applying a coat of silicate paint to the dried surfaces.

2. Watt Dict. Chem., **1**, 714, sp.gr. 1.27–1.45; Chemiker Kalender, **1**, 525; Cross and Bevan, "Cellulose," 1895.

3. O. Guttman, "Schiess- und Sprengsmittelw.," 1900.

mination and the nature of the material used. De Mosenthal,[1] who has made careful determinations of samples from various sources, gives 1.52–1.60 as the density of purified cotton,[2] and of nitrocotton 1.65. The gravimetric density in the pulped state is about 0.3. It appears that nitrated cottons of varying degrees of nitration possess practically the same densities,[3] and that, therefore, density

1. J.S.C.I., 1904, **23**, 292; 1907, **26**, 443; Jour. Dyers and Col.; 1904, **20**, 292; 1907, **23**, 214.

2. The method of determination is by means of a 100 cc. Regnault picnometer, the water being first boiled and then introduced hot after about 10 gm. of the dried material has been weighed in. The water is allowed to soak into the material, again boiled by creating a partial vacuum with the air pump in order to remove any remaining air, mechanically assisting the escape of remaining bubbles, if necessary. The failure of the water to rise in the neck of the picnometer under the bell jar of the air pump upon exhaustion, or to fall when normal pressure was again restored, was taken as an indication that all air had been removed. The results obtained are as follows:

Material Nitrated.	Density of Raw Material.	Nitrogen. Per Cent.	Density of the Nitrated Material in Water.
Cotton	1.607	13.5	1.665
"	1.607	13.2	1.659
"	1.607	12.95	1.672
"	.....	12.44	1.642
"	.....	12.37	1.681
"	.....	12.33	1.676
"	1.607	12.30	1.654
"	.....	12.29	1.676
"	.....	12.27	1.666
"	.....	11.96	1.658
"	.....	11.36	1.669
"	1.607	11.19	1.675
"	.....	11.10	1.653
"	1.607	10.86	1.669
Wood cellulose	1.575	13.30	1.715
"	1.575	12.80	1.659
"	1.575	12.52	1.673
Ramie	1.570	13.22	1.670
"	1.570	11.75	1.667*
Flax	1.548	13.15	1.685*
"	1.548	11.76	1.641

* In benzene.

The above results being concordantly higher than those given by other investigators, experiments were made to determine if the apparent discrepancies could be attributable to the use of water. Determinations of cellulose made with benzene or ethyl alcohol instead of water were concordant, while with the nitrated cellulose, lower results were obtained. The failure of previous investigators to specify the method and liquid in which density determinations were made, no doubt accounts for the variation in results to be found in the literature. Disintegrated nitrated cotton gave same results as also that deposited from solution, either by precipitation or evaporation. Densities of the nitrates in solution were found to follow the normal rule that the density of a solid in solution is different from, and higher than in the solid state.

3. Viz., the increase in weight during nitration is nearly compensated for by the increase in volume.

determinations are of no value in differentiating between the various nitrates.

Optical Properties. Great discrepancies are found in the literature on the behavior of the cellulose nitrates with polarized light. In Muspratt-Stohmann's Chemistry [1] it is stated that whereas with guncotton, examination under the microscope in polarized light shows no color, or almost none, cotton fiber shows variegated colors. Liebschütz [2] claims to be able to recognize dodecanitrocellulose by its greater brilliancy, deca- by its blue color, and octo- by a yellow color. According to Chardonnet,[3] up to 6.9% N the nitrated cotton can be recognized only by a few large, shrunk-up fibers; from 6.9–9.1% N there are more such fibers and a few rainbow-colored ones; from 9.15% on, the fibers turn more uniformly gray; from 10–11.28% the fibers appear first colorless, afterwards purple, dark blue, and light blue, the last color becoming prevalent as the nitrogen increases. When all the fibers are all equally light blue the polarization is complete. Lunge [4] alone and with Weintraub [5] is unable to corroborate these observations, but finds that the most highly nitrated celluloses appear blue in polarized light, while products with percentages varying from 13.9–13% N, cannot be distinguished from each other polarimetrically. They found that as the nitrogen percentage rises the blue color becomes less intense, but never turns gray or colorless. Their observations, however, were so conflicting as to lead them to state that the only result they could determine with certainty was the appearance of unchanged cellulose, which was apparent by its very strong flashing up in yellow, orange, and variegated (rainbow) colors, while highly nitrated products (12.75% N and upward) are distinguished by flashing up not so strongly in blue colors. De

1. 1869; Lunge, J.A.C.S., 1901, **23**, 535.

2. Mon. Sci., 1891, (3), **33**, 119.

3. Wyss-Naef, Z. ang. Chem., 1899, **20**, 31; C. Suvern, "Die Künstliche Seide," Berlin, 1900, 25. A Trowbridge (Physical Rev., 1908, **26**, 539; 1908, **27**, 282) has studied the optical properties of the cellulose nitrates with the object of determining whether it would prove a suitable substance with which to coat rock salt surfaces in order to preserve polished surfaces soluble in water. He found the extinction coefficient of collodion is practically negligible in the region between the visible spectrum and $\lambda=6\mu$. In this region a rock salt plate or prism is more transparent when coated with a thin film of collodion than it is without being coated. In the region from 6μ to 10μ there are two narrow absorption bands and one extended band in the region of absorption for all of which the extinction coefficient attains values great enough to cause well-marked surface color. He finds (p. 282) that two strong absorption bands and one weak double one is shown. The positions of the strong bands are $\lambda=5.89\mu$ and $\lambda=7.79\mu$. The former of these is so narrow that it might well serve as a reference point in the infra-red spectrum. He neglects to state a very important point—the percentage of nitrogen in the nitrocellulose experimented upon. Cf. Aschkinass, Wied. Ann., 1895, p. 55; Julius, Beibl., 1893, **17**, 31.

4. L.c., 536.

5. Zeit. ang. Chem., 1899, **20**, May 16.

Mosenthal[1] has observed that dry fibers do not present the same appearance as when moistened, and that the colors not only differ with the moistening liquid, but also by its concentration. The colors are also affected by the magnification and the character and source of illumination.[2] Best results are to be obtained by examination of the fiber moistened with 50% aqueous alcohol, or, for permanent mounts, Canada balsam rendered fluid with benzene.[3] The author's experience in the examination of a large number of nitrocottons used in the lacquer and artificial-leather industries, is that the main value of a polariscopic examination is to determine small amounts of unchanged cotton in highly nitrated products, and this can be more readily done by solution in acetone or amyl acetate when the unnitrated cellulose remains undissolved. It may safely be said that the accurate optical analysis of pyroxylin is entirely in the future, notwithstanding the more recent work of Chardonnet.[4] The refractive index is not dependent on the state of nitration,[5] while all cellulose nitrates are dextro-rotatory.[6] The cellulose nitrates can be dialyzed through vegetable and animal membranes, acetone being used both as solvent and external liquid.[7]

Hygroscopicity of Cellulose Nitrates. This phenomenon is intimately associated with the presence of hydroxyl groups in the cellulose molecule, and in proportion as these groups are suppressed by the introduction of negative acid radicals to form the corresponding esters, decreasing attraction for atmospheric moisture results. For example, whereas cotton normally retains from 6–10% atmos-

1. J.S.C.I., 1907, **26**, 444.

2. Considering that variation in color on polarization is due to changes in the anisotropic condition of the fiber induced by physical influences and not dependent alone on chemical changes, it would seem that the appearance of nitrated fibers when polarized should be a function of the method and not of the degree of nitration, and that different kinds of nitrated fibers should not appear identical.

3. Hübner and Pope (J.S.C.I., 1904, **23**, 404) experienced difficulty in making observations, due to the transparency of the fiber and with Canada balsam mounts, consequent upon the fact that the refractive index of cotton only differs from that of hard Canada balsam by 0.004. The author has for years made nearly daily microscopical examinations of cotton fibers in hard balsam, and finds no difficulty in obtaining clear definition, if the light is "turned low" by closing both iris diaphragms. The colored frontispiece in Guttmann, "Twenty Years of Explosives," 1909, is an excellent illustration of nitrated and unnitrated cotton fiber. The structure of a nitrated cotton is rendered more distinct and stereoscopic by means of first moistening the mount with alcohol, as has been mentioned by Hartig (Untersuchungen über den Bestand und Wirkungen der explosiven Baumwolle, Braunsweig, 1847) and Bokorny (Chem. Zeit., Dec., 1896).

4. C.R., 1907, **145**, 115.

5. De Mosenthal, l.c., 446.

6. L. Vignon, Bull. Soc. Chim., 1904, **31**, 296; see also Bull. Soc. Chim., 1904, **31**, 105; C.R., 1900, **131**, 509, 530.

7. See Bigelow and Gemberling on dialysis through collodion membranes, Chapter XV.

pheric moisture, this percentage gradually decreases from the lower acetates and nitrates to those of higher acetic and nitric content.[1] O. Masson has shown [2] that when cotton is immersed in water its temperature rises for some time and then slowly falls, while "absorbent" cotton, although behaving like ordinary cotton in saturated air, does not give the same rise in temperature in water.[3] By the investigations of Beadle and Dahl [4] it was first conclusively proven that in a series of cellulose nitrates the proportion of normal hygroscopic moisture decreased in inverse ratio as the proportion of ester groups progressively increased. W. Will,[5] who has made an exhaustive study of the influence of the combined nitro groups on the hygroscopic properties of cellulose, finds that raw cottons of different origin, cotton waste, and hemp, all had a hygroscopic value of 7–8%, while jute gave 10% and the starches 10.6–14.1%. Mechanical treatment, as pulping, or ether extraction of the contained fats and waxes, increased the hygroscopicity of the raw cottons to nearly 10%, which may be regarded as the true value for cellulose.[6] A decrease in the affinity

1. Cross and Bevan, "Cellulose," 5. C. Beadle (J. Frank, Inst. Aug., 1894) found that cellulose nitrate retains the more moisture in the air-dried condition, the smaller the number of OH groups esterified by the nitric acid. See also F. Haber (Dingl. Poly., 1894, **294**, 210).

2. Proc. Roy. Soc., 1901, **74**, 230; cf. C. O. Weber, Zeit. ang. Chem., 1899, **13**, 416.

3. In the latter case the effect is due to condensation of vapor which it absorbs, for both absorption and heat production occur for many hours and the amount of heat is approximately that calculated from the amount of heat absorbed.

4. Chem. News, 1894, **71**, 1; 1896, **73**, 180.

5. Mitt. Centralst. f. Wiss.-Tech. Unters., Berlin, 1904, No. 4, pp. 1-33.

6. In order to obtain comparative results it was necessary to select two limits representing the two extremes of humidity at which constant equilibria were established. In view of the instability of the cellulose nitrates at higher temperatures, Will defines his standard of hygroscopicity as the difference between the weights of the materials when dried in an ordinary oven at 40° to a constant weight on the one hand, and when exposed to an atmosphere fully saturated with moisture at a temperature of 25° for twenty-four hours on the other hand. Variations from this standard were found:

(*a*) By further drying over sulphuric acid, after drying at 40° under ordinary conditions, all the nitrocelluloses lost a further quantity of water; the sum of the hygroscopic moisture and percentage of nitrogen was then no longer a constant, but varied with the proportion of nitrogen to a greater extent.

(*b*) By varying the temperature at which the products were exposed to a moist saturated atmosphere from 25° to 15° and 5° while adhering to the ordinary method of drying at 40°, the hygroscopic moisture was considerably increased, the increase being greater from 25° to 15° than from 15° to 5°. In these cases the sums of the hygroscopic moisture and nitrogen are constants within the practical limits, the equations being $H = 20 - 1.3N$ for 15°, and $H = 21.6 - 1.4N$ for 5°.

(*c*) When the moist equilibrium was established in air of various degrees of humidity short of saturation, an exposure of twenty-four hours was necessary before complete interchange was effected. It was found that the ratio between the relative humidity of the air and the hygroscopicity was only constant up to about 80% of saturation. Between 80% and complete saturation, the affinity of the nitrocellulose for moisture increased in a far greater measure than the humidity of the air. No constant relation between the percentage of nitrogen and the hygroscopicity of the nitrocellulose could be traced in air below the saturation point.

of cellulose for water results from treatment with dilute acids and alkalis, as also the previous heating of the cotton above 100°. From the determination of the hygroscopicity of 65 samples of nitrocotton in which the percentages of nitrogen varied from 8.20–13.21—practically the whole range of nitrates of industrial value—it was found that the sum of the hygroscopic moisture and the nitrogen content was a constant in all cases with a value of about 14.6. This constant remained unaltered when the nitrate was subjected to various chemical, physical and mechanical treatment.[1]

The hygroscopic moisture was found to have no relation to the solubility of the cellulose nitrate in ether-alcohol, depending entirely on the percentage of nitrogen. Unstable nitrates show abnormally high values, which, however, are reduced to the normal when the products are rendered stable by long boiling with water.[2]

Variations in Solubility and Viscosity. There is apparently no relation between the nitrogen content and viscosity of the nitrocotton when dissolved in its usual solvents, and hence attempts to duplicate the viscosity of a certain product is impossible from considerations of acid mixtures and length of immersion. In general the fluidity is always greater with increased temperature of nitration,[3] other factors remaining the same. And inasmuch as with

1. Including pulping, solution, and gelatinization; treatment with dilute acids or alkalis; partial elimination of the nitrogen; and complete denitration followed by renitration.

2. By further desiccating over sulphuric acid, after drying at 40° under ordinary conditions, all the cellulose nitrates lose a further quantity of water, the sum of the hygroscopic moisture and nitrogen percentage being then no more a constant, varying with the proportion of nitrogen to a greater extent. By varying the temperature at which the products were exposed to a moist saturated atmosphere from 25–15°, while adhering to the former method of drying at 40°, the hygroscopic moisture was found to be considerably increased.

The "normal hygroscopic moisture," as determined at Neu Babelsberg (Cross and Bevan, "Researches on Cellulose," **2**, 74), consists in desiccating in an ordinary oven kept at the constant temperature of 40°±1°. It is then exposed to an atmosphere saturated with moisture at 25°, the temperature being maintained ±0.5°. At its saturation point the cellulose is weighed in specially constructed balances in which the same conditions of temperature and moisture are maintained. This arbitrary method is selected because the cellulose nitrates may be safely dried at this temperature without fear of decomposition.

3. The question of viscosity is commercially of great import. Bronzing liquids and heavier pyroxylin lacquers, which are applied by dipping the material to be coated into them, must be made to a given "flow" or fluidity in order that a uniform coating may be applied. Where articles of hardware are given a protective coating of these lacquers, if the fluid be unduly viscous, less of the excess lacquer will run off the surface before congealing; the coating will then be heavier than desired and more fluid required to coat a given number of articles. A satisfactory result is not attained by merely diluting the lacquer to the required viscosity with solvent, for then the amount of pyroxylin per given volume is decreased and the resultant film may be too thin for proper protection. It is for this reason that pyroxylin lacquer manufacturers blend various "batches" of nitrated cotton in order to obtain a desired viscosity with a given number of grams cellulose nitrate per liter. Just as it is correct to designate a cellulose nitrate as of a given nitrogen

rise of temperature the yield decreases, it follows that a low viscosity is obtained only at the expense of the yield, i.e., the greater the fluidity, the less obtained. The various degrees of solubility are produced according to the strength of the acids used and length of immersion of the cellulose, while the viscosity results from a manipulation of the temperature of the nitrating bath. It is quite possible to produce from the same acid mixture and same source of cellulose two samples of nitrocotton, where the one formed at a lower temperature (30–35°) will be but half as fluid as the other sample nitrated at a higher (55–65°) degree, amyl acetate, say, being used as the solvent in both instances. In general if the proportion of sulphuric to nitric acid is increased over 3:1, the solubility in ether-alcohol, acetone, and amyl acetate increases, while the percentage of nitrogen slowly falls, although it is impossible to foretell the degree of solubility from the nitrogen percentage alone. It is possible to occasionally produce cellulose nitrates soluble in 95% ethyl alcohol where pure nitric acid or nitric acid containing less than 10% sulphuric acid is used, their nitrogen content approximating that of octonitrocellulose (11.13% N).[1] The commercial preparation of nitrocottons for films and lacquers is a careful adjustment of nitration conditions to embody the minimum of temperature to produce the highest yield of lowest viscosity, rather than an endeavor to obtain the greatest weight of nitrate which will merely dissolve in the solvent. In any solution where the liquids consist of both a solvent and non-solvent (amyl acetate and benzine) the viscosity increases as the point of precipitation is neared, due to preponderance of the pyroxylin non-solvent (benzine). It would appear from the literature on the subject that a mixture of 3 parts ether to 1 part alcohol is the more commonly employed solvent for technical use. This, however, is not true, amyl acetate and commercial wood alcohol (containing acetone) having practically replaced the ether-alcohol formerly used. Even in the manufacture of cinematographic and other continuous photographic films where a low evaporative solvent is required, the acetates obtained from the lower fusel oil fractions (butyl and propyl acetates) combined with wood alcohol, are being used more and more, due to their

percentage and solubility (specifying the solvent), so also is it necessary in lacquer manufacture to produce solutions where a given weight per volume of nitrated cotton results in a solution of given viscosity. In the production of artificial textiles and photographic films, where also solutions of known viscosity are required, the evaporated solvents are but partially and imperfectly recovered. From motives of economy, therefore, a very fluid pyroxylin is used, that the maximum of solids may have the minimum viscosity and a given weight of pyroxylin may be deposited in the dry form, with the loss of the least amount of solvent.

1. See Major D. Goebel, Z. ges. Sheiss- u. Sprengstoffw., **2**, 43; N. A. Stepanow, Tech. Sbornik, **17**, 73.

high solvent power and low moisture absorption during evaporation, thus reducing the tendency toward clouding and fogging of the films.[1]

The statement is found in the literature that all forms of cellulose nitrate are soluble in acetone and acetic ether, and a rough method of estimating unchanged cellulose has been suggested by dissolving the cellulose nitrate in one of these solvents, the insoluble portion being cellulose. In many examinations of ethyl acetate-insoluble residues from cotton nitration, the author has yet to find one free from nitrogen, even after the acetate has been left in contact with the nitrated cotton for periods of as long as two weeks, with daily change of solvent. The percentage of nitrogen as calculated on the sample dried at 100° has varied from 0.2–4.7, thus indicating the presence of nitrogen-containing bodies in nitrocotton, insoluble in ethyl acetate. The anomalous results in solubility reported by different investigators render accurate generalizations impossible at the present time. A nitrocotton of 12.5% nitrogen may be practically insoluble in ether-alcohol or may entirely dissolve to a clear and fluid solution. The curious observation has been made and substantiated that a nitrocotton solution in ether-alcohol, amyl acetate, or acetone, decreases in viscosity upon standing if the solution be slightly acid. This fact is made use of in the artificial silk industry, where, in Germany, Lehner has obtained patent protection for the expression "acid-moistened collodion." If the nitration produces a pyroxylin of higher viscosity than desirable, the solution in ether-alcohol or amyl acetate is made faintly acid—usually by the addition of 0.2% acetic acid—and exposed to the light. The viscosity gradually diminishes, and when it reaches the desired point the solution is either used in the acid state or carefully neutralized by alcoholic sodium hydroxide, the sodium acetate formed being readily soluble and hence the clearness of the solution unimpaired. Although the viscosity of cellulose nitrate solutions bears no direct relation to the nitrogen content, still it reaches its maximum with the highest percentage of nitrogen. The presence of traces of acid in amyl acetate-pyroxylin solutions does not decrease the viscosity as quickly or to as great an extent as the same pyroxylin and same percentage of acid dissolved in ether-alcohol. The viscosity of solutions sinks with increase of water content in the nitrating mixture, and the yield is correspondingly lowered. Nitration of the same cotton at 20° for eight hours, at 40° for two hours, or

1. In fact Hönig and Schubert, Mon. Sci., 1864, **6**, 708; 1865, **7**, 455, and Blondeau de Carolles, J. pr. Chem., 1865, (2), **32**, 427, have described water-soluble, sulphuric acid cellulose esters, which upon treatment with alcohol regenerate bodies of the nature of cellulose, partly soluble and partly insoluble in water.

at 60° for fifteen to twenty minutes, can be made to produce a nitrocotton of substantially the same solubility, but not necessarily of same viscosity.

The above generalizations include most of the observations of direct value of these two constants as affected by nitration.

Stability of the Cellulose Nitrates. Among the characteristics which distinguish the cellulose nitrates the property of stability has been most exhaustively investigated. Due to the numerous and fatal explosions which have occurred from time to time in factories where these esters are manufactured, the volume of research on this subject has been considerable.[1] Although numerous qualitative and quantitative observations have been made as to the causes underlying the decomposition of these esters, a great many points are still open to experimentation. From the mass of experimental data accumulated, it appears that the factors which cause instability in cellulose nitrates may be comprised within the following classification:

(1) The formation of sulphuric esters in the nitrating process, not entirely eliminated in the subsequent washings. Cross, Bevan, and Jenks[2] have obtained sufficient results to establish the fact that sulphuric acid does take part in the ester reaction, in addition to its well-known function of dehydration. Hake and Lewis,[3] in investigations on the formation of these sulphuric esters in the nitrating process, have found that sulphuric acid is combined in all products of nitration where used in the nitrating mixture, their formation being due to delayed nitration, with partial solution or gelatinization of the cellulose by sulphuric acid and subsequent nitration. Also that the proportion of sulphuric acid is determined by the ratio of sulphuric to nitric acids in the nitrating bath.[4] They found that in nitration with nitric acid alone, and subsequent precipitation with

1. For bibliography see Silberrad and Farmer, J.C.S., 1906, **90**, 1172; also Maurey, Béchamp, Kuhlmann, Pelouze, and de Luca, C.R., 1848, **28**, 343; 1853, **37**, 134; 1856, **42**, 676; 1864, **59**, 363, 487; Heussermann, Ber., 1903, **36**, 3956; 1904, **37**, 1624.

2. Ber., 1901, **34**, 2496; cf. O.W. Willcox, J.A.C.S., 1908, **30**, 271; for "Ignition Points of Nitrocellulose and Smokeless Powders," see G. Finzi, Gazz. Chim. ital., 1909, **39**, (1), 549; abst. J.S.C.I., 1909, **28**, 676.

3. J.S.C.I., 1905, **24**, 374, 914; cf. Hake and Bell, J.S.C.I., 1909, **28**, 457; Cross and Bevan, "Cellulose," 1900–1905, 53; Briggs, Ber., 1905, **38**, 358; see "Action of Sulphuric and Nitric Acids in the Nitration of Cellulose," J.S.C.I., 1909, **28**, 823.

4. There is no doubt that sulphuric acid plays an important part in the stability of cellulose nitrate, where a mixture of nitric and sulphuric acids is used for nitrating. There is much evidence to show that with nitric acid alone a purer and more stable product is formed. In many receipts for the manufacture of collodion for photographic use it is recommended that no sulphuric acid be used. Where the sulphuric acid attacks and dissolves the cellulose, the initial product may be regarded as cellulose sulphuric acid, but a rapid molecular rearrangement takes place and a series of sulphates result.

sulphuric acid, no sulphuric acid was combined with the nitrocotton. A ratio between sulphur content and stability, other factors being equal, is claimed. The amount of combined sulphates may be decreased by subjecting the nitrated cotton to the vapors of various solvents, especially glacially acetic acid.

(2) The presence of hydro- and oxy-cellulose in the cellulose before nitration. It is generally conceded that undue bleaching of cotton or other treatment which partially alters the cellulose fiber results in the formation of a nitrate of diminished stability. These bodies have ill-defined characteristics, but it has been repeatedly verified that a pure cellulose, when nitrated, forms a more stable ester than a cellulose which has been altered in chemical structure by bleaching or other chemically harsh treatment. The best method as yet found for removing these altered cellulose nitrates is continued washing, without neutralization by alkali.[1]

(3) Traces of free nitrating acids, only found in products of faulty methods of washing, undoubtedly result in instability, as indicated by the low heat tests. This defect can be removed by continued washing without alkali.

(4) Vegetable wax and resinous bodies associated with cotton in the raw state, and incompletely removed during the processes preparatory to nitration. Where scouring of the cotton has been imperfect, or waste cotton is employed which has been incompletely purified from oil, grease and extraneous matter, it is found that the stability of the resulting nitrate is low. There has been no well-defined process worked out to remove these bodies after nitration, in order to bring the cellulose nitrate to the required stable state.

(5) The presence of molds or other micro-organisms. The fact noted[2] that cellulose nitrates sometimes contract mold, and the judgment of Sy[3] that denitrifying bacteria might start a decom-

1. The work of Leo Vignon (C.R., June 6, 1898; Sept. 10, 17, 1900) on the formation of oxy- and hydro-cellulose shows plainly that cotton and cotton waste may, by the nature of the treatment to which they are subjected, be partly transformed into oxyecllulose, which gives an unstable nitrate, and into hydrocellulose, which has a different rate of nitration than ordinary cellulose. Cross and Luck (J.S.C.I., 1900, **19**, 642; E.P. 5286, 1898) remove such foreign substances by means of acetone so diluted with water that it does not dissolve the higher nitrates. Will and Lenzl (Ber., 1898, **31**, 68) have examined many nitrated carbohydrates for stability, in general finding them unstable.

2. O. Guttman, "Manufacture of Explosives," 1905, **2**, 49; cf. J.S.C.I., 1897, **16**, 283; 1898, **17**, 1180; 1899, **18**, 174, 857; 1901, **20**, 8, 609; 1902, **21**, 819, 1470; 1903, **22**, 511, 924, 1208; 1904, **23**, 953, 1903; 1905, **24**, 148, 347.

3. Jour. U.S. Artill., Sept.–Oct., 1903; T. Bokorny (Chem. Zeit., 1896, **20**, 985) found that cellulose trinitrate will serve as a food supply for molds, if suspended in distilled water containing the requisite amount of mineral matter, and placed in the dark. However, no growth was observed if mineral matter be absent.

position, led Malenkovic [1] to study the problem experimentally, from which he concluded that neither cellulose nitrates or glycerol nitrates are directly decomposed by mold, but that the cellulose nitrates when placed in contact with organic matter are superficially decomposed. It appears, therefore, that danger of instability from mold is, at least, a remote one. It is to be noted that to prevent molding, small amounts of mercuric chloride are added to the cotton. Mercury possesses the property of combining with cellulose in a manner which causes the mercury to remain, even after repeated washings. Such nitrocotton-containing mercury gives a factitious higher stability test.

(6) Other compounds associated with the nitrocotton, nitrosaccharoses, pectins, and other vaguely characterized bodies. They cause instability, and are difficultly removable by washing, by digestion with cold alkaline solutions, or by extracting with ether, alcohol, or benzene. All are, however, partially, at least, soluble in acetone, pyridine, and ethyl acetate. They are neutral to test paper, but become acid upon boiling or otherwise heating.[2] They often combine with metallic oxides, as lead and zinc, and these combinations are much more stable.[3] It was formerly considered that the lower nitrated bodies were sources of instability, but the now generally accepted fact is that the lower nitrated celluloses are of increased stability. The presence of unusually large amounts of nitrogen tetroxide does not decrease the stability of the nitrated cotton. Bergmann and Junk [4] found that when an unstable ester was extracted with alcohol

1. Rev. d'Art, 1908, **71**, 261; Mitteil u. Gegenstände J. Artill. u. Geniew., 1907, 509; abst. J.S.C.I., 1907, **26**, 1295. M. Jacque, Z. ges. Schiess- Sprengstoffw., 1910, **5**, 81, reports instances of blocks of compressed guncotton (containing 15% of water) showing very marked growths of micro-organisms, but in no case was the nitrogen content or stability of the nitrocellulose affected. Attempts to cultivate the spores of *Aspergillus niger* and *Mycetozoa* in nitroglycerol and ethyl and amyl nitrates were not successful. It is pointed out that the *algæ* and aquatic plants produce organic salts, especially oxalates, during decomposition, and that traces of these organic salts would adversely affect the heat test of guncotton and nitroglycerin. In support of this view the author mentions that in 1907 one of the large dynamite factories in Mexico experienced great difficulty in obtaining heat tests up to their standard of fifteen minutes at 76°. Investigation showed that the cause of the trouble lay in the fact that the water reservoirs and channels had considerable quantities of vegetable growths in them, and when this was cleared away the heat tests of the guncotton and nitroglycerin returned to their normal figures.

2. Ulmic bodies, which are closely related to the higher members of the acetic series, may also influence the stability of a not thoroughly purified cellulose nitrate. Girard states (Ann. Chim. Phys., 1881, **24**, 337) that when hydrocellulose is heated above 80° it is converted into ulmic bodies possessing an acid reaction. A. L. Stern (J.C.S., 1904, **85**, 336) doubts the accuracy of this statement, but says that when care is taken to remove all traces of acids no such bodies are formed, but easily form with traces of acid. See also Hake and Lewis, J.S.C.I., 1905, **24**, 378.

3. This method has been patented, U.S.P. 647420, 1900; E.P. 18868, 1898.

4. Z. ang. Chem., 1904, **17**, 982, 1018, 1074.

for some time, a stable compound was always produced. J. C. Thomas [1] has found that for the purpose of neutralizing any acid formed after drying, some manufacturers use a small amount of chalk, which probably exerts a sufficiently pronounced saponifying effect to account for the decreased stability. Will has shown [2] that in cellulose nitrates the rate at which nitrogen splits off increases with the percentage of water in the nitrating acids, and also as the ratio of sulphuric to nitric acid increases. That the longer cellulose nitrate is boiled with calcium carbonate, the greater the tendency to decomposition; the percentage of nitrogen is without influence on the stability; boiled nitrocellulose, subsequently washed, gives the iodide reaction immediately, when washed only half an hour; a lower nitrated cellulose is more stable than a higher one; and addition of alkali is worthless, if not detrimental.

Silberrad and Farmer [3] have made exhaustive investigations on the gradual deterioration of cellulose nitrates on storage. They found that nitric peroxide is liberated, a gradual but continuous loss in weight occurs; the percentage of nitrogen decreases; the ether-alcohol soluble matter increases, while the acetone residue shows a slight tendency to increase. It has been shown [4] that the majority of the decomposition products of the cellulose nitrates are soluble in water, and that the water-soluble matter increases on storage. Their results showed conclusively that at any given temperature the rate of deterioration is much greater in a moist atmosphere than in the absence of water, the reason probably being that the hydrolytic decomposition of the nitric esters requires the presence of water. Stability of nitrocotton as regards atmospheric and climatic influences has still to be conclusively tested. It seems to be very difficult, if not impossible, to obtain satisfactory and stable cellulose nitrates by direct nitration of wood pulp.

It has been found [5] that the rate of decomposition of cellulose nitrates cannot be experimentally established for temperatures below

1. Zeit. ang. Chem., 1898, **11**, 1003; 1907, **20**, 1143; abst. J.S.C.I., 1898, **17**, 1180; 1903, **22**, 924; 1904, **23**, 953.

2. Gummiztg., Celluloid Supp., 1896, **5**, 21.

3. J.S.C.I., 1906, **25**, 961, cf. Abel, Phil. Trans., 1867, **157**, 181; Spica, Atti. del Reale, 1st Veneto, 1899, **58**, 289; also "Causes of Decomposition of Nitrocellulose," M. Jacque, Z. ges. Schiess- u. Sprengstoffw., 1906, **1**, 395.

4. Silberrad and Farmer, J.C.S., 1896, **69**, 1184. They found present in the aqueous extract ethyl nitrite and nitrate, nitrous and nitric acids, ethyl alcohol, ammonia, formic, acetic, butyric, dihydroxybutyric, oxalic, tartaric, *iso*saccharinic, and hydroxypyruvic acids. Also carbohydrates by the fermentation test.

5. A. V. Saposhnikov, J. Russ. Phys. Chem. Soc., 1905, **37**, 280; 1906, **38**, 1186; 1907, **39**, 1186; Mem. des Poudres et Saltpêtres, 1907–1908, **14**, 42, and M. Borissow, J. Russ. Phys. Chem. Soc., 1901, **36**, 836; Chem. Centr. 1904, **2**, 1030.

125° nor above 155°; at the former the reaction is too slow, at the higher it comes too near the explosion point.[1] [2]

Starch Nitrate. Since 1833, when Braconnet produced "xyloidine" by the action of nitric acid upon starch, numerous attempts have been made to prepare this body in a pure and stable state, but until recently it has been impossible to produce this nitrate on a manufacturing scale, due apparently to the extensive washing required to eliminate traces of acid, and the deficient stability of the finished product.[3] The process of W. Schückler,[4] which is essentially the method at present employed, consists in first drying the starch at 100° in order to eliminate all traces of moisture, and after grinding to an impalpable powder, immersing in nitric acid of 1.5 sp.gr. at 20–25°. After thorough and repeated agitation in the nitrating fluid, the starch is transferred to another receptacle and covered with sulphuric acid of 1.84 sp.gr. The starch nitrate so produced is washed free from acid, pressed in cakes, and dried at a low temperature. Many inventors made unessential modifications of this process, but it was not until 1904 that A. Hough [5] succeeded in sufficiently stabilizing the refined nitrate to admit of its technical use without danger.[6] He produces a nitrostarch containing 16.38% N, using oleum to main-

1. For temperatures between 125–140° and 145–155° the relation of reaction velocity to temperature can be expressed by the following equations respectively: $\frac{(dv)}{(dt)_{max}} = -24.6 + 0.201t$, and $\frac{(dv)}{(dt)_{max}} = -136.5 + 0.985t$. The relation of velocity to temperature therefore within each of these intervals is represented by a straight line.

2. According to F. I. Du Pont and F. Sparre (U.S.P. 836704, 1906; abst. J.S.C.I., 1907, **28**, 553) a cellulose nitrate may be stabilized by removing by means of solvents a portion of the unstable bodies. Their process consists in agitating with nitrocellulose, suspended in a liquid in which it is insoluble, an emulsion of a solvent of nitrocellulose diluted by a substance which is insoluble in the liquid in which the nitrocellulose is suspended, and which is not a solvent of nitrocellulose, but is soluble in the nitrocellulose solvent. As an example: 1 part of nitrocellulose suspended in 8 parts of water is agitated with 1 part of amyl acetate diluted by 0.25 part of a liquid such as amyl alcohol or benzine. See U.S.P. 503583, 1893; E.P. 15865, 1893, for similar stabilizing process.

3. By means of the process introduced by the "Actiengesellschaft Dynamit Nobel."

4. E.P. 11665, 1889; 14625, 1890.

5. U.S.P. 751076, 1904; E.P. 21171, 1902; 12627, 1904; D.R.P. 172519, 1906; abst. J.S.C.I., 1902, **21**, 1471; 1904, **23**, 385; 1905, **24**, 691.

6. His method was to inject dry, finely powdered maize starch below the surface of a mixture containing 3 parts nitric acid, 2 parts sulphuric acid (98%) and sufficient Nordhausen fuming sulphuric acid (containing 40% SO_3) to "bring the nitric and sulphuric acids to 100% concentration," and leave an excess of 2 3% free SO_3. A further quantity of Nordhausen acid is added during the process to maintain the strength of the nitrating liquid. The temperature of nitration varied between the limits 45–50° F. The starch after nitration is separated by filtration, freed from lower nitro-derivatives by treatment with hot dilute ammonia, and dried. The finished product is described as an orange-yellow powder, readily soluble in ether-alcohol. Nitrogen, 16.5%.

tain about 2% free SO_3 in the acid mixture during nitration. Recently E. Berl and R. Bütler,[1] in repeating Hough's work, were unable to confirm his results of high nitrogen content. The next year F. Holmes assigned to the Eastern Dynamite Company, of Wilmington, Del., a process by means of which the nitrate was stabilized by boiling with calcium carbonate,[2] and continuing the purification by dissolving the nitrated starch on a mixture of alcohol and acetone.[3] He found the nitrate to be left in a stable state upon distilling off the

1. Z. ges. Schiess- u. Sprengstoffw., 1910, 5, 82. They injected 10 gm. of starch by means of compressed air into 30 gm. of a cooled acid mixture consisting of equal proportions of nitric acid and sulphuric acid, and with sulphur trioxide in excess. The starch nitrate was stabilized by boiling with a solution of ammonia, and was afterwards washed with water. The following table gives the results obtained with starches of different origins.

Starch.	Nitrogen. Per Cent.	Ignition Point. °C.	Relative Viscosity (2 Per Cent. Acetone Solution).
Maize	13.23	121	1.86
Potato	13.44	120	3.78
Rice	12.86	135	1.60
Soluble	13.35	120	1.35
Potato	13.44	...	2.66
Cellulose nitrate	13.40	...	1.05

The viscosity figures refer to acetone as unity. All the starch nitrates were insoluble in alcohol. In a mixture of ether and alcohol the nitrates prepared from rice and soluble starch were freely soluble, while the others were only partially soluble. The normal moisture content of the nitrate prepared from potato starch was 6.57%. A comparison was also made between the nitration of cellulose and potato starch with an acid consisting of sulphuric acid (40.84%), nitric acid (55.33%), and sulphur trioxide (3.83%). The proportion of acid to carbohydrate was 50 to 1.

2. U.S.P. 779421, 779422, 1905.

3. Holmes in describing his process says: "The starch is mixed with concentrated nitric and sulphuric acids, preferably in the proportion of 25 parts starch to 100 parts of mixed nitric and sulphuric acids in the following proportion: nitric acid 32.5%, sulphuric acid 64.5%, water 3%, although these limits may be varied somewhat and still produce a satisfactory product. After separation from the acids, the nitrated starch, which is then in an unstable condition due to impurities, is mixed with alcohol and a reagent which has a lower evaporating point than the alcohol, and which reagent alone or in the presence of alcohol, will dissolve the nitrated starch.

"As the reagent above mentioned, I have used acetone or ether, both of which have a lower evaporating point than alcohol. The acetone alone will dissolve the nitrated starch. The ether alone will not dissolve all the nitrated starch, but in conjunction with the alcohol will dissolve substantially all. Both acetone and ether have a lower evaporating point than alcohol. Acetone is preferable because a higher nitrated product is obtained than where ether or ether and alcohol is used. With acetone, the lower nitrates remain in the solution, while when ether is used, some of the lower nitrates are subsequently precipitated. Approximately 1 part nitrated starch to 1 part acetone or ether and 2 parts alcohol is preferred. After the nitrated starch has been dissolved, the acetone or ether is evaporated off, leaving the former in suspension in the alcohol. Irrespective of which solvent is used, those impurities which tend to produce instability in the starch will remain in solution in the alcohol while the stable nitrated starch, being insoluble, is precipitated out, and dried, after filtration."

acetone.[1] The next year[2] a process was published for rendering the purification less tedious, by separating the product in a flaky mass, which could be readily washed.

The original product prepared by Braconnet was claimed to possess the formula $C_6H_8O_3(NO_3)_2$, but O. Mulhäuser,[3] as the result of an extended series of researches, was able to prepare and separate two bodies of the following definite composition, viz:

(*a*) $C_6H_{7\frac{1}{2}}O_{2\frac{1}{2}}(NO_3)_{2\frac{1}{2}}$

(*b*) $C_6H_7O_4(NO_3)_3$

or doubling the molecule of starch in order to give the expression whole numbers; and adding a product of 11.1% total nitrogen obtained:

Tetranitrostarch $C_{12}H_{16}O_6(ONO_2)_4$	nitrogen	11.11%
Pentanitrostarch $C_{12}H_{15}O_5(ONO_2)_5$	"	12.75%
Hexanitrostarch $C_{12}H_{14}O_4(ONO_2)_6$	"	14.14%

That not nitro compounds, but true esters of starch are formed was proven by the fact that the substances separate nitric acid upon treatment with sulphuric acid, while nitric oxide and soluble starch are both regenerated upon treatment with aqueous ferrous chloride. Furthermore, upon shaking a sample with sulphuric acid over mercury, all the N is split off as NO. Mulhäuser has described these bodies in detail, and given distinct processes for the preparation of tetra-[4],

1. In U.S.P. 779421, Holmes says after the starch has been nitrated—as described in the subsequent note, "I stabilize the nitrated starch in the following manner: After boiling in water with the addition of some stabilizing or acid neutralizing reagent which is practically insoluble in water, such as an alkaline carbonate, preferably that of calcium, I find that all traces of acid are completely removed. The carbonates of the alkaline earths produce a result impossible with the soluble carbonates as sodium carbonate, because the latter decomposes quite rapidly the nitrostarch when the solution is hot, while calcium carbonate, being a less energetic alkali, is still as efficient an antacid. The stabilizing result is marked after boiling about twenty-five hours, and after seventy-five hours' boiling there results a compound which is exceedingly stable, as stable, in fact, as guncotton purified in the usual manner. After boiling has been completed the product is dried at a low temperature. In a series of subsequent patents (U.S.P. 875913, 875928, 1908) Holmes recommends the introduction as stabilizing agents in the proportion of 2–5% on the weight of the dried nitrated starch, the following substances: ammonium orthophosphate, ammonium arsenate, normal ammonium chromate, ammonium palmitate, normal ammonium tartrate, normal ammonium pyrotartrate, triammonium citrate, oxamide, thiourea, nitraniline, aniline oxalate, acetanilide, nitrotoluidine, toluidine oxalate, acetoluide, and benzamide. U.S.P. 895639, 1908, adds ammonium carbonate.

2. G. E. Arnold, A. C. Scott, and H. E. U. Roberts, E.P. 3449, 3450, 1906.

3. Ding. Poly. J., 1889, **273**, 137; 1892, **284**, 137. See bibliography to 1892 in Arms and Explosives, Dec., 1892.

4. Tetranitrostarch may be prepared in large quantities as follows: Potato starch is dried at 100° until constant in weight. It is then ground to a fine powder, and dissolved in nitric acid of sp.gr. 1.50. The mixture is continually agitated and cooled so the temperature remains below 25°. The charge of starch is intro-

penta-,[1] and hexa-nitrostarch [2] and recommends the moistening of 6 parts nitrojute with 2 parts starch nitrate with ethyl acetate, working the mass to a homogeneous paste and finally drying at 50°. The product so prepared contains 11.54% N, and is stated to be highly stable. The action of dilute nitric acid on starch has recently [3] been exhaustively investigated [4 5].

Nitropentaerythrite. The method of Thiemé [6] for the preparation of this compound is to produce the pentaerythrite from the condensation of acetaldehyde and formaldehyde in the presence of lime. After fusing to 190–250°, the melt is reduced to a very fine powder dissolved in nitric acid and precipitated by sulphuric acid, the nitropentaerythrite being formed. It was intended principally as an explosive, either dry or gelatinized.

duced through an opening in the cover of the digesting vessel, there being ten times as much acid by weight as starch taken. When the starch is apparently all in solution in the nitric acid, a large vessel is filled with spent nitrosulphuric acid from nitroglycerin manufacture, the temperature of which is under control by refrigeration apparatus, and in this spent acid the nitrostarch in solution in nitric acid is slowly sprayed in by means of large atomizers, using an injector worked by compressed air. This precipitates the nitrostarch in the form of a finely grained powder. Five parts by weight of spent acid is required to completely precipitate 100 parts by weight of the nitric acid starch solution. After precipitation the nitrated starch is collected on a nitrated filter cloth, repeatedly washed until neutral to litmus, ground into an "emulsion" and treated with aniline, toluidine or xylidine, preferably the former, so that when pressed into cakes it contains about 33% water and not over 1% aniline. With the above-outlined process, Mulhäuser prepared nitro derivatives containing 10.96–11.09% N, snow white in color, becoming electrified when rubbed, very stable, and readily soluble in cold nitroglycerin.

1. Pentanitrostarch is produced along with some tetra- when 20 gm. rice starch, previously dried at 100° until water-free, is treated with 100 gm. nitric acid, sp.gr. 1.501, 300 gm. sulphuric acid, sp.gr. 1.82, and after standing for one hour the entire mass is discharged into a large quantity of water, and well washed. The washing is completed by means of a dilute solution of sodium hydroxide. The yield is about 147–149%. To separate the tetra- from the penta-nitrostarch, the mass is heated with ether-alcohol, the ether distilled off, causing the penta- to precipitate out, leaving the tetra- dissolved in the alcohol. As obtained by this method the tetra- contained 10.45% and the penta- 12.76–12.98% N.

2. Hexanitrostarch is the product chiefly formed when 40 gm. anhydrous starch is treated with 400 gm. nitric acid, sp.gr. 1.501, and allowed to remain at room temperature for twenty-four hours. The entire mixture is then run into 1,200 cc. sulphuric acid 66° Bé., and the white, flocculent precipitate formed, well washed and dried at the atmospheric temperature. The product consists of about 75% hexa- and about 25% penta-nitrostarch.

3. By A. Doroschewski and A. Rakowski, Jour. Russ. Chem. Phys. Soc., 1907, **39**, 427; Chem. Centr., 1907, **2**, 1325.

4. M. Berthelot gives the heat of formation of nitrostarch as 812 cal. for 1 gm. and the heat of total combustion as 706.5 cal. for 207 gm. Berthelot and Veielle have determined the average velocities for nitrostarch powder.

5. A patent (E.P. 6460, 1888) has been granted to A. E. Nobel for the use of nitrostarch. He incorporates nitrostarch, nitrodextrin and nitrocellulose together with acetone and produces a homogeneous mixture, the acetone being afterwards removed by distillation.

6. U.S.P. 541899, 1895; E.P. 20281, 1894; abst. J.S.C.I., 1895, **14**, 66. For nitromannite see L. Vignon and Gérin, C.R., 1901, **133**, 515; Bull. Soc. Chim., 1902, **27**, 24.

Nitrates of the Carbohydrates. W. Will and P. Lenze[1] have investigated the nitric esters of the bioses, trioses, pentoses, and hexoses, all well-characterized carbohydrates, the methods of nitration being designed to introduce the maximum amount of nitrogen. Starch, wood gum and other celluloses were also experimented with. As regards temperatures of decomposition, they were found to be much more stable than the cellulose nitrates. In endeavoring to determine the probable instability of the cellulose nitrates, the following summary as condensed by Cross and Bevan[2] represents the more important results.[3]

"*Monoses.* The *aldoses* are fully esterified, in the pentoses 4OH, in the hexoses 5OH groups reacting. The pentose nitrates are comparatively stable at 50°; the hexose nitrates on the other hand are extremely unstable, showing a loss of weight of 30–40% when kept twenty-four hours at this temperature.

"Xylose is differentiated by tending to pass into an anhydride form ($C_5H_{10}O_5$–H_2O) under this esterification. When treated in fact with the mixed acids, instead of by the process usually adopted by the authors of solution in nitric acid and subsequent addition of the sulphuric acid, it is converted into the dinitrate $C_5H_6O_2\cdot(NO_3)_2$.

"*Ketoses* (C_6). These are sharply differentiated from the corresponding aldoses by giving *tri*nitrates $C_6H_7O_2(NO_3)_3$ instead of *penta*-nitrates, the remaining OH groups probably undergoing internal condensation. The products are, moreover, *extremely stable.* It is also noteworthy that levulose gave this same product, the trinitrate of the anhydride (levulosan) by both methods of nitration.

"The *Bisaccharides* or *Bioses* all give the octonitrates. The degree of instability is variable. Cane-sugar gives a very unstable nitrate. The lactose nitrate is more stable. Thus at 50° it loses only 0.7% in weight in eight days; at 75° it loses 1% in twenty-four hours, but with a rapid increase to 23% in fifty-four hours. The maltose octonitrate melts (with decomposition) at a relatively high temperature, 163–164°. At 50–75° it behaves much like the lactose nitrate.

"*Trisaccharide.* Raffinose yielded the product $C_{18}H_{21}O_5\cdot(NO_3)_{11}$.

"*Starch* yields the hexanitrate (C_{12}) by both methods of nitration. The product has a high melting and decomposing point, viz., 181°, and when thoroughly purified is quite stable. It is noted that a yield of 157% of this nitrate was obtained, and under identical conditions cellulose yielded 170%.

1. Ber., 1898, **31**, 68.
2. "Researches on Cellulose," 1895–1900, Longmans, Green & Co., p. 42.
3. See also Cross, Bevan and Jenks, Ber., 1901, **31**, 2496.

"*Wood gum*, from beech wood, gave a tetranitrate (C_{10} formula) insoluble in all the usual solvents for this group of esters.

"The authors point out in conclusion that the conditions of instability and decomposition of the nitrates of the monosetriose series are exactly those noted with the cellulose nitrates as directly prepared and freed from residues of the nitrating acids. They also lay stress upon the superior stability of the nitrates of the anhydrides, especially of the ketoses."

The process of J. M. Bonneville [1] of acting upon sugar with nitric acid to produce a nitro derivative soluble in acetone and methylated spirit, and of especial value in lacquer manufacture, has never established its industrial value.[2]

Other Nitrated Celluloses. Various forms of cellulose have from time to time been proposed for the preparation of the corresponding nitrates, and while possessing desirable properties, have more often been brought forward in an endeavor to produce less expensive or more stable esters. In general they have not found the wide commercial applications which their advocates had hoped for, due in the main to difficulty in purification or obtaining sufficient amounts of the raw material for continued use. As far back as 1859 a waterproofing composition was devised, using nitrated white pine sawdust.[3] Henry Spill in 1870 attempted to use esparto grass, but had difficulty in removing the silica.[4] Ramie,[5] flax and esculapius weed [6] have been nitrated and worked up into plastics as dental plates. Dean prepared "nitrodextrin"[7] by treating bleached cotton rags with a mixture of sulphuric and hydrochloric acids, and after the rags became tender they were nitrated in the usual manner until a thick ropy mucilage was formed. The mixture was well washed with a large volume of water, the nitrodextrin allowed to collect by subsidence, and further washed until neutral. R. Bernstein [8] used the solid fruits, nuts and shells of trees of the palm species, particularly the fruit of *Phytelephas macrocarpa*, usually known as vegetable ivory, and of several species of "*Maurita*," which after boiling in alkaline solutions and washed in water were nitrated in the usual manner. Dolliak [9] found that

1. E.P. 814, 1881.
2. A. Elliott in his article on nitrosaccharose (J.A.C.S., 1882, **4**, 147) mentions amyl alcohol as a solvent of this substance.
3. J. Mackintosh and G. Rhodes, E.P. 734, 1859.
4. E.P. 1017, 1870; for an efficient method see Hengst, E.P. 18002, 1898.
5. L. Dietz and B. P. Wayne, U.S.P. 133969, 1872.
6. Bickford, Spooner and Pyroxylin Manufacturing Co., E.P. 1170, 1873.
7. G. S. Dean, E.P. 2226, 1881. 8. E.P. 12778, 1885.
9. J.S.C.I., 1885, **4**, 366. For résumé of literature on nitrojute, see Cross and Bevan, J.C.S., 1880, **37**, 666; 1882, **41**, 90; 1889, **55**, 199; C.N., 1898, **77**, 300; Mulhäuser, Chem. Zeit., 1892, **16**, 163; Ding. Polyt. J., 1892, **283**, 88.

when rye straw is boiled fifteen hours in 1–2% caustic soda solution, and then nitrated and washed until neutral, the matted, brownish-yellow mass formed contained 11.07% N, and when gradually heated flashed at 177°. It was found to be soluble in ether-alcohol, acetone, amyl acetate and acetic acid, but decomposed at ordinary temperatures after several days, even in the presence of urea and other mild alkalis. By pulping the straw after nitration [1] and exhaustive washing, C. F. Hengst was able to materially prolong the stability. The Marsden Company,[2] advocate the use of vegetable pith, such as that of maize or cornstalk, which is first separated from the wood and fiber, boiled with a dilute alkali to dissolve the vegetable fats, sappy and other adherent constituents, the separation being assisted by repeated heating, beating and winnowing, preferably with heated air. The pith thus prepared gave a nitrate of very great solubility and low viscosity. Gorse, and similar materials have been extensively used in France [3] for the manufacture of nitrated cellulose intended for those plastics where complete solubility is not essential.[4 5]

1. E.P. 13656, 1888; see E.P. 20978, 1890, for nitration of cottonseed hulls, etc.

2. E.P. 6656, 1899; for process of nitration of horny materials, see Notelle and Leroux, F.P. 347702, 1904; for cellulose nitrates from the cellulose of the Agave plant, see A. Carneiro, Z. Schiess- und Sprengstoffw., 1909, **4**, 103. For mixed esters of cellulose and nitric acid see Cross, Bevan and Jenks, C.N., 1901, **84**, 61.

3. G. P. Horteloup, F.P. 347353, 1904; for manufacture from sisal, see Hollins and Taylor, E.P. 23192, 1908.

4. F.P. 327136, 1902; 331176, 1903.

5. According to L. Vignon and P. Sisley (Bull. Soc. Chim., 1891, (3), **6**, 898; J.C.S., 1892, **62**, 1111) when silk is immersed in ordinary nitric acid (sp.gr. 1.133) at 45° for one minute, and is subsequently washed in water, it is colored intensely yellow, and the color is unaffected by exposure to air and light, while it is deepened by the action of dilute alkali solutions. Nitric acid free from nitrous compounds does not cause this coloration, which is found to vary in intensity directly with the amount of nitrous compounds present, and with the temperature and specific gravity of the acid used. The deepening of color by alkaline solutions is independent of their causticity, while the silk increases in weight and takes up a certain amount of the base.

Silk treated with a mixture of hydrochloric acid and sodium nitrate is colored pale yellow; the color is rapidly browned on exposure to air and light, or by the action of boiling water or alcohol, while cold alkaline solutions turn it reddish brown. Silk which has been subjected to the action of nitrous acid, or of nitric oxide, in an atmosphere of carbonic anhydride, and subsequently well washed, is colorless, but is colored a stable yellow by nitric acid. Nitric peroxide colors silk yellow at once. Silk heated with nitrous acid, and then oxidized with potassium permanganate and hydrochloric acid, is colored exactly as by nitric acid (impure), from which it seems that the yellow coloration is dependent on the action of nitrous compounds, and subsequently of an oxidizing agent.

The yellow color is discharged by acidified stannous and chromous chloride solutions. Analyses of the nitrated silk show that about 2% of nitrogen is fixed in the reaction, probably, primarily, as the nitroso group, which the further action of the nitric acid converts into the nitro group, a carboxyl group being displaced. The properties of the product somewhat resemble Mulder's xanthoproteic acid, but this contains more carbon and less nitrogen, and results from a more intense action. Sulphuric acid dissolves ordinary silk gradually to a slightly colored solution, whereas nitrated silk is converted into a pale yellow viscid mass. Aqueous

At various times have been exploited the use of wood fiber,[1] esparto,[2] wood pulp,[3] hemp,[4] gorse,[5] the fiber of *Ulex Europens*,[6] and the flower stems of various species of Agave,[7] but the products have never attained commercial prominence.

Due to the persistence of J. R. France[8] a process for the manufacture of a cellulose nitrate for the celluloid industry was tried on a manufacturing scale in the United States in 1890. The cotton fiber was first carded and combed so as to arrange the fibers longitudinally instead of irregularly, after which they were cut off in such short lengths as to have the appearance of dust. The theory of France, and the essence of his process, was that up to that time variation in uniformity and stability of resulting nitrate was due in a large measure to obstructions in the cotton fiber, and that by comminuting the fiber, nitration would take place more rapidily and at a less cost. It is a fact that the nitrates produced by the France process were readily soluble, but it was soon determined that the yield was quite inferior, due to the passage of large amounts of cotton into solution in the nitrating fluid, while still more was lost in the subsequent processes of washing. The main difference in the ease or difficulty of nitration of various textile fibers lies in their morphological structure. When flax fiber and cotton are nitrated under similar conditions as regards time of immersion and acid strength of bath, it is found that whereas the cotton readily yields a fluid solution to amyl acetate, flax gives a difficultly soluble and glutinous mixture, due to the greater resistance to acid penetration of the cell wall. If the temperature of nitration for flax be raised higher than that for cotton, fluids of the same viscosity are obtained.

Nitrates of Hydro- and Oxy-cellulose. These bodies, which have never been prepared in a pure state, are of interest chiefly upon

potash dissolves ordinary silk in the cold, and nitrated silk on heating; neither solution is precipitated by dilution with water, and both evolve ammonia when heated. Both varieties of silk are dissolved by hydrochloric acid and by zinc chloride solution.

Ammoniacal vapors are evolved on distillation of each variety, and a carbonaceous residue is left. For nitration of horn, see F.P. 347702, 1904.

1. W. Ruckteschell, E.P. 4349, 1885.
2. Proc. Chem. Soc., 1894, **89**, 137.
3. E.P. 336, 1891; see also Engel, E.P. 6022, 1887.
4. C. F. Hengst, E.P. 13656, 1888.
5. A. Bouret and A. B. Verbiese, E.P. 24768, 1898.
6. G. Horteloup, F.P. 331176, 1903; 347533, 1904; 327136, 1902.
7. E.P. 21505, 1905; A. Carneiro, Z. ges. Schiess- und Sprengstoffw., 1909, **4**, 103, finds the fibers from the flower stems to contain from 71.4–80.6% cellulose, and the ash 2.64–2.80%. The fiber was scoured with sodium carbonate, bleached and nitrated in a mixture of 1 part nitric to 2 parts sulphuric acids, the nitrogen content of the resulting product varying within the limits 11.5–12.4%.
9. U.S.P. 420445, 420447, 1890; E.P. 20973, 1890; see France, J.S.C.I., 1889, **8**, 303; 1890, **9**, 821.

the bearing which they apparently exert upon the stability of the cellulose nitrates. L. Vignon [1] has nitrated hydro- and oxy-cellulose and found that the viscosity of their ether-alcohol solutions are much lower than the normal cellulose nitrates. They are equally inflammable with the nitrates, show a greater affinity for basic dyestuffs, and are less stable. From extensive research on the higher nitrates of cellulose, hydrocellulose and oxycellulose made by Berl and Klaye [2] the general conclusion is drawn that the formation of either hydro- or oxy-cellulose nitrates must play a very minor part in the formation of higher cellulose nitrates at ordinary nitration temperatures.[3]

Determination of Solubility. The degree of solubility of a cellulose nitrate in a specified liquid or series of solvents should always be determined in advance, in order to judge if the pyroxylin is satisfactory for the use intended. This is especially important in the manufacture of photographic films, and in the formation of artificial filaments, for with the former, the small specks of undissolved product show up as distinct particles in the developed negative or film, and when these are magnified as in "moving pictures," they give either a continued blurred appearance or a succession of light patches flitting across the screen. With filaments, the fine specks of undissolved portions soon clog the spinning orifices and interrupt the continuity of the thread.

One method of determining the solubility is to dissolve 5 gm. of the air-dry sample in 100 cc. of the particular solvent mixture that the cellulose nitrate is to be used in commercially,[4] or if the viscosity is high, the solvent may be increased to 200 cc. The glass-stoppered flask is shaken frequently to facilitate solution, either alone or after the introduction of a weighed amount of shot or glass beads,[5] until all that will dissolve has gone into solution. Allow to stand at rest for four hours, or until the sediment has deposited, then decant carefully the supernatant liquid without disturbing the precipitate. Add 100 cc. solvent to the contents of the flask, shake vigorously and filter the precipitate through a Gooch crucible or tared

1. C.R., 1898, **126**, 1658; 1900, **131**, 509; 1903, **136**, 898, 1818; Bull. Soc. Chim., 1901, (3), **25**, 130; also J.C.S., 1895, **67**, 84; 1904, **85**, 336. For action of potash on oxynitrocellulose, see Vignon, Bull. Soc. Chim., 1899, (3) **21**, 597.

2. Z. ges. Schiess- und Sprengstoffw., 1907, **2**, 381; cf., Chardonnet, E.P. 24638, 1893.

3. Cf. E. Knecht, Ber., 1904, **37**, 549; C. Piest, Z. ang. Chim., 1907, **21**, 2497.

4. The particular solvent intended to be used on the factory scale should always be taken, on account of the varying results obtained with different solvents. A pyroxylin which gives a certain percentage of undissolved residue in ether-alcohol will not necessarily give the same amount when the solvent is changed to, say, amyl acetate-benzine (60-40%).

5. In order to affect solution more quickly by disintegrating the viscous gelatinized nitrated cellulose.

filter paper, dry at 100°, and subtract the weight of the shot or beads, the difference being the weight of insoluble material in the sample taken. Usually 1–1.5 hours' drying is sufficient. Where quick and approximate determinations are to be made a portion of the 5% solution, is placed in a 10 cc. urinary tube graduated in 1/10 cc. and rotated for fifteen minutes at the highest speed. The precipitate may now be readily read off, and results obtained in this manner, in the author's hands, have proven quite satisfactory.[1]

Estimation of Viscosity. As has been stated, the viscosity of a cellulose nitrate solution is an important commercial means of deciding as to the particular use for which it is especially adapted. Uniformity in lacquers, film production and coating compositions is impossible where the viscosity and total solids of the solution are unknown. For solutions of low viscosity and containing up to 5 ounces to the gallon, a simple form of viscosimeter is sufficiently accurate, the instruments of Sayboldt and Redwood being hardly necessary. The principle, however, of allowing a given volume of fluid to pass through an orifice of known diameter at a determined temperature and taking the length of time required to do so is maintained.

A 50 cc. glass stopcock burette or separatory funnel with the aperture in the stopcock made quite, small, is used for the more fluid solutions, the time required to empty from one mark or graduation to another being recorded. As the results are but comparative, no definite standard has been adopted. Viscosity determinations are usually made in attempts to duplicate given mixtures, or to bring to an arbitrary but definite standard, as regards fluidity, various nitrocotton mixtures. Acetone is taken to dissolve the nitrate, in testing for films and coating compositions, and usually a combination of amyl acetate 65 and benzine 35 parts (by volume) for lacquers. The liquid to be examined is first brought to a definite temperature,[2] usually 25° being taken, a small amount poured into the apparatus and the sides carefully wetted by means of a brush to remove any air bubbles which might adhere and appreciably affect the reading. The viscosimeter is then filled, time given for air bubbles (if any)

1. A method of solubility determination often used, is to dissolve out the solvent portion and evaporate to dryness the solvent containing the nitrocotton in solution. This method gives uniformly high results, due to the difficulty of removing the last traces of solvent, an entirely soluble nitrate often giving—apparently—102–104%.

2. This is quite similar to the consistency-apparatus of Stahl (Nürnberg) described by L. E. Andes (Rev. Fett- und Harz. Ind. 14, 76) in which is determined the number of seconds required for an air bubble of fixed volume to pass from bottom to top of a glass cylinder of definite height filled with the test sample at 17.5°.

to rise, and the time for a given volume of liquid to run out of the apparatus, or to fill a receptacle of known capacity placed under the instrument, determined by means of a split-second watch. There are two sources of error in this method. The evaporation of solvent while passing through the air may be sufficient so that duplicate determinations with the same sample are inadvisable, or the solution may be so viscous that a large portion may adhere to the sides of the instrument.

The principle of the Cochius viscosimeter (Fig. 2), consists in measuring the time required for a bubble of air to ascend a certain distance up the tube. The apparatus is filled by opening the stop-cock *b*, and pouring in at *a*, after removing the stopper. The size of the air bubble is determined by the height to which the tube is filled and by the graduations, 1, 2, 3, 4, a convenient size bubble being 2 cc. Stopper *a* is inserted, cock *b* closed, and by turning the stopper, the boring *d* is brought opposite the little opening *e*, in order to relieve any internal pressure. The stopper is then tightly shut, and the apparatus inverted and fastened. The bubble is now just below the stop cock. By quickly turning the cock through 90° it is fully opened, the bubble begins to rise, and by means of a split-second watch the time required for the center of the bubble to pass from *f* to *g* is observed. The number of seconds required for the bubble to pass from one mark to the other may be called the viscosity number. The distance from *f* to *g* is arbitrary, it being evident that the longer the distance the more closely concordant will be the results. From 0.8–1 meter length between *f* and *g* and 100 cc. capacity are convenient dimensions. In the absence of such an instrument, a glass tube of about 2 meters in length may be taken, of 40–80 mm. internal diameter, one end being closed, the other stoppered. A mark is made by scratching the glass about 25 mm. from each end. The heavy solution having been reduced to the desired temperature for the observation, is poured into the tube until the latter is nearly full. A small sphere, usually a marble or steel ball from a ball-bearing wheel, is thoroughly rubbed with the solution in order to disentangle the air bubbles that might otherwise cling to the ball, then dropped into the solution in the tube, which is then stoppered. By inverting, the time can be determined of the passage of the

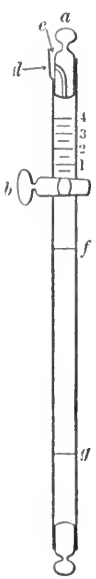

FIG. 2.—Cochius Viscosimeter.

ball between the marks on the tube. This apparatus, while apparently crude, is nevertheless susceptible of quite accurate work, and possesses the added advantage of allowing any number of duplicate determinations to be made by simple inversion of the tube.[1] [2]

Determination of Nitrogen by Lunge Nitrometer. (See Fig. 3.) Carefully weigh out 0.6–0.7 [3] gm. of the previously dried nitrocotton in a small weighing bottle of 10–15 cc. capacity and add from a pipette or burette 10 cc. concentrated sulphuric acid. Gently rotate the bottle until the nitrate has entirely dissolved. The fluid is then carefully transferred to the cup of the nitrometer,[4] the pressure tube of the instrument having first been raised so as to bring the mercury in the measuring tube up into and filling the orifice of the stopcock. Now lower the right-hand or pressure tube just sufficient to cause the solution to be drawn into the bulb of the measuring tube when the tap is slightly opened. Close and rinse the weighing bottle and stopper with 10 cc. additional sulphuric and transfer into the bulb in the same manner as before. Finally wash down the sides of the cup with small portions of sulphuric acid, using about 10 cc. in all, and, after allowing this to be drawn into the bulb as before, the stopcock is securely closed.[5] The solution being all in the measuring tube the pressure tube is again slightly raised and the tube containing the dissolved nitrate vigorously shaken for a period of ten minutes. It is then replaced in a clamp, the pressure relieved by lowering the

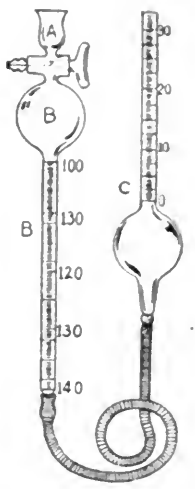

FIG. 3.—Lunge Two-bulb Nitrometer.
(*A*, cup; *B*, measuring tube; *C*, pressure tube.)

1. The accuracy of the temperature of the solution is an important factor. Lunge records an instance where a pyroxylin solution gave a viscosity of 20.35 seconds at 14°, while with a rise in temperature to 25.25°, but 14.18 seconds were required. From this it is seen that viscosity rapidly decreases with increase of temperature.

2. An alternate method is to use, instead of a ball, a float nearly the size of the tube, and used in a manner similar to an Erdmann float in a burette. The speed of motion of the float can be regulated by its diameter, i.e., the more nearly the diameter is to that of the tube, the more slowly will the float ascend.

3. Depending on the nitrogen content of the nitrocotton. An amount must be taken so that the volume of NO shall be greater than 100 cc. but less than 150 cc. The nitrometer capacity should be 150–200 cc., and contain a bulb at the top of 100 cc. capacity. The stopcock—which is three-way—must be very accurately ground.

4. Or where the nitrate has not been finely pulped it may be weighed directly into the nitrometer cup, the acid added, and after stirring with a glass rod until dissolved, transferred into the measuring tube and rinsed with sulphuric acid in the usual manner.

5. Great care is necessary to prevent the admission of air bubbles and the pressure tube must be only slightly lowered or the vacuum formed will cause the acid mixture to run in with a rush—difficult to control—and carry air along with it.

pressure tube, and the apparatus allowed to stand for twenty to thirty minutes for the reaction to become completed and the contents of the nitrometer to cool to the room temperature. The level of the mercury in both tubes is equalized,[1] after which the cubic centimeters of NO gas are read off from the measuring tube, the temperature of the thermometer attached to the tube and the barometic pressure[2] being taken.

Determination of Nitrogen with the Gas-Volumeter.[3] By means of this apparatus, the calculations necessary in the nitrometer are obviated, no reference tables are required, the method being applicable for absolute as well as relative measurements. The following description of this apparatus, which was devised and perfected by G. Lunge, is taken from Lunge's Technical Methods of Chemical Analysis, substantially in the words of the inventor. By means of this apparatus, the reduction of a volume of any gas, either wet or dry, to normal conditions (usually 0° and 760 mm. pressure), is effected without observation of the temperature and pressure.

The principle of the apparatus is to inclose a known volume of air at such a pressure that it occupies exactly the volume which it would take up at 0° and 760 mm. pressure. If the same temperature and pressure are now applied to another volume of gas, this will also occupy the volume which it would take up at 0° and 760 mm. pressure. This condition is brought about by confining the known volume of air in a "reduction tube," to which a pressure tube is attached, and placing the latter in such a position that the gas in the reduction tube is brought to the volume it would occupy under normal conditions. The reduction tube being connected to the gas-measuring apparatus by means of a T-tube, by adjusting the level of the mercury in the two tubes to the same height, the volume correction is applicable directly to the gas in the measuring tube.

The apparatus, which consists of two sections, is shown in Fig. 4, the three tubes *A*, *B* and *C*, being connected as indicated with sufficiently long rubber tubing (so-called "pressure tubing,") each tube being held in position by movable clamps working vertically. The

1. A little experience will enable adjustment to be made with accuracy. It must be remembered that the acid portion above the mercury has a density of about 1.8 while that of the mercury is about 14. Therefore when comparing the heights of mercury in the two tubes, the mercury in the pressure tube should be raised higher than the mercury in the measuring tube, by about $\frac{1}{7}$ of the height of the acid in the latter tube.

2. Another method of adjustment is by very slightly opening the tap on the measuring tube, after first adding a little sulphuric acid in the cup. When accurately adjusted the acid should neither rise nor fall.

3. Lunge, Ber., 1890, **23**, 440; 1892, **25**, 3157; Z. ang. Chem., 1890, **3**, 139; 1891, **4**, 197, 410; 1892, **5**, 677; J.S.C.I., 1890, **9**, 547.

measuring tube *A* may be a nitrometer or any other gas-measuring apparatus. The so-called reduction tube *B*, is either enlarged at the top, or preferably as shown,[1] of cylindrical form in order to bring the inclosed volumes of gas as far as possible into a parallel position. The first graduation indicates a volume of 100 cc., the lower cylindrical portion being divided into 0.1 cc. for another 30–40 cc. The tube is set once for all, by observing the temperature and pressure, calculating the volume which 100 cc. of dry air would occupy under the observed conditions, bringing the mercury to the corresponding division, and closing the tap above the bulb.[2] The pressure tube *C* is preferably constricted at the bottom as shown in *B* in order to economize the amount of mercury needed to fill the system.[3]

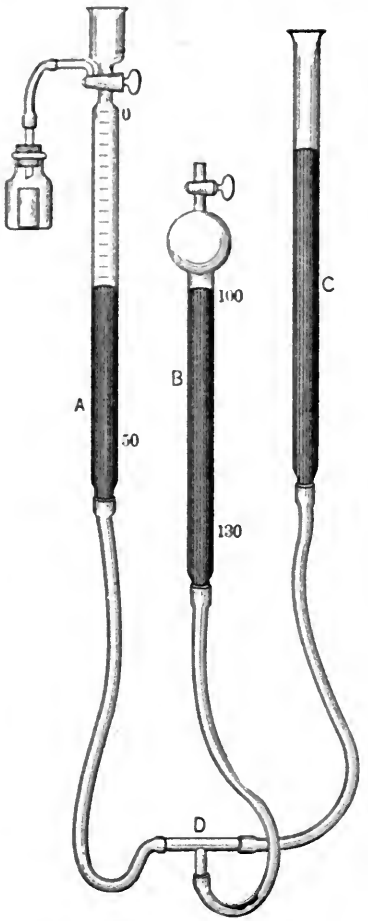

FIG. 4.—Lunge Gas-Volumeter.

1. Göckel (Z. ang. Chem., 1900, **13**, 961, 1238) has devised a tap which is ridged horizontally and sealed by mercury, which Lunge states is satisfactory and generally applicable.

2. If the tap is air-tight, the determination, once made, is permanent. As an alternative, the upper end of the tube may end in a capillary, which can be sealed off after the volume has been correctly adjusted.

3. If moist gases are to be measured in the measuring tube, a small drop of water must be introduced into the reduction tube; if dry gases such as nitric oxide generated over sulphuric acid in the ordinary nitrometer are to be measured, a drop of conc. sulphuric acid is introduced into the reduction tube, but never in sufficient amount to more than cover the top of the mercury meniscus. The gases must be measured either quite dry or saturated with moisture.

Formula for dry gases:

$$V_1 = V_0 \frac{(273+t)760}{273 \times B}.$$

Formula for moist gases:

$$V_1 = V_0 \frac{(273+t)760}{273(B-f)}.$$

Where V_1 = volume of gas required;
V_0 = normal volume of gas;
t = observed temperature;
B = observed barometric pressure;
b = tension of water vapor at observed temperature.

To adjust the reduction tube, the temperature is observed by means of a thermometer suspended by the side of the tube, and the barometric pressure obtained. The volume V_1 which 100 cc. of gas at normal temperature and pressure V_0 will

When any gas-volumetric operation has been carried out in *A*, the volume of gas is not read in the ordinary manner after adjusting the mercury in *A* and *C* to equal levels. Before taking the reading of the volume of gas in *A*, the three tubes are so adjusted that the mercury in *B* stands at the 100 cc. graduation, and the levels in *A* and *B* are the same.[1] This adjustment is most readily carried out in the following manner: The tube *A* is securely clamped while *B* and *C* are raised, *C* to such an extent that the mercury in *B* rises to the graduation 100 cc. *B* and *C* are then lowered simultaneously, so that the difference of level of the mercury in the two tubes is maintained until the mercury stands at equal levels in *A* and *B*, in the latter still at the 100 cc. graduation.[2] It is obvious from the above, that by the use of the gas-volumeter all thermometric and barometric readings, and all reductions by calculation or special tables, are avoided; the volume of gas is read off directly under conditions corresponding to the normal pressure and temperature. As it is not easy to shake the mercury and sulphuric acid in the tube itself when a reduction tube is attached, and as there is danger of the gas going over into the reduction tube, it is advisable to induce the decomposition in a separate apparatus, *E* and *F*, Fig. 4, and then transfer to the volumeter for measurement. *E* is the reaction vessel of capacity of about 100 cc. when used for the analysis of nitrous vitriol, and of about 200 cc. when used for the analysis of dynamite and nitrocellulose. It is provided with a tap, a beaker *c*, and pressure tube *F*, arranged as in the ordinary nitrometer.[3] To carry out a determination, *F* is first raised until the mercury reaches the end of the capillary *a*, which is then closed with a ground glass or rubber cap *b*, to prevent the escape of mercury on shaking, and the tap of *E* also closed. The material to

occupy at the observed temperature and pressure, either dry or moist, is then calculated by means of the above formula. For method of measuring dry gases with a wet reduction tube and conversely, see Lunge, "Technical Methods of Chemical Analysis," 1908, v. 1, pt. 1, p. 141.

1. The gas volumes in *A* and *B* then correspond to such temperature and pressure that their volumes are equal to those which they would occupy when dry at 0° and 760 mm. pressure, since this condition (if properly conducted) is insured once for all in the case of *B*, and the gas in *A* is at the same temperature and under the same pressure.

2. Usually the adjustment will be found a trifle inexact, which can be remedied by a slight movement of *B*. In cases where another liquid is introduced into the measuring tube besides mercury, the pressure which it exerts must be taken into account. For instance, in nitrogen determinations by the Dumas method, a mark is made below the 100 cc. graduation of the reduction tube, corresponding to one-tenth the height of the potassium hydroxide solution in the measuring tube, the sp.gr. of which may be taken as 1.10 that of the mercury. In then reading off the volume of nitrogen, the mercury in the reduction tube is brought to the 100 cc. graduation, and that in the leveling tube to the special mark below, by which means the height of the potassium hydroxide solution is allowed for.

3. *E* is best supported by a ring, and *F* by a clamp.

be determined is introduced in the usual manner through the cup *c*, the reaction induced by shaking, and the whole allowed to stand to regain atmospheric temperature. *E* and *A* are then brought to the same height, as shown in the figure, and the mercury in the measuring tube of the volumeter *A* driven over to the end of the thick rubber tube attached to the capillary *d*. The cap *b* is then removed, the capillary *a* slipped into the rubber connecting tube until glass touches glass, *F* raised and *C* lowered, the two connecting taps opened, and the gas syphoned from *E* to *A*. The tap on *A* is closed as soon as the acid from *E* reaches the bottom of the capillary tube *c*. The levels in *A* and *B* are then adjusted, and the mercury in *B* brought to the 100 cc. graduation, as described above.[1] By the use of several reaction vessels, many more determinations can be carried out in a given time than is possible with the ordinary nitrometer.

Determination of Nitrogen Oxides. The lower nitrogen oxides are estimated by allowing a weighed or measured volume of the acid to flow from a burette graduated in 1/20 or 1/50 cc., into a measured volume of half normal potassium permanganate solution (never the reverse) diluted with 4–5 volumes of distilled water previously warmed to 40°.[2] The quantity of permanganate required varies directly with the amount of nitrous acids present. 1 cc. N/2 $KMnO_4$=0.009502 gm. N_2O_3.[3] [4]

Determination of Mixed and Spent Acids. Three reliable methods of determining the composition of the mixed acids are as follows:

(*a*) Total acidity is determined by titration of a 2 cc. sample

1. This method of transferring gas is advantageous, not only because the pressure due to the sulphuric acid does not have to be allowed for, but also because the unavoidable dirtying of the apparatus is confined to the reaction vessel *E*, which is readily cleaned. Care should be taken that the bores of the capillaries *a* and *d* are not enlarged at the ends, so that no bubbles of gas will adhere upon connecting up.

2. At ordinary temperatures the reaction proceeds too slowly, while if the temperature be too high or the solution too concentrated, hydrated manganese dioxide separates out and gives trouble, but does not prevent titration from being carried out, since the oxide again goes into solution after the titration is completed.

3. If the volume of permanganate solution taken be denoted by x, and the volume of nitrous vitriol required to decolorize by y, the weight of nitrous oxide (N_2O_3) in gm. per l. is expressed by the formula $\frac{9.502x}{y}$. To express the result in HNO_3 or $NaNO_3$ instead, the factors 15.75 or 21.258 are substituted above for the 9.502.

4. Undue prominence has been given to the action of the nitrogen oxides in nitrocotton manufacture. Often in the purchase of mixed acid from manufacturers, the amount of nitric oxides (calculated as N_2O_3) is limited to 0.05%. After rebuilding the spent acid a number of times the low oxides will increase to 0.2–0.3%—a negligible quantity. For nearly all purposes, this amount of oxides can be calculated as its equivalent in nitric acid by ignoring them entirely. No difference in the nitrocotton can be found if this method be followed where the oxides are not in excess of 0.3–0.4%. (See J. R. Pitman, J.S.C.I., 1900, 19, 645.)

the weight of which has previously been determined by a 100 cc. picnometer, using N/2 NaOH. Sulphuric acid is obtained by the usual gravimetric precipitation with a barium salt. Nitrous acid is estimated by diluting a portion of the acid mixture, neutralizing with sodium carbonate or hydroxide and treating with potassium ferrocyanide and citric acid.[1] The total acidity less the sum of the nitrous and sulphuric acids represents the nitric acid present.

(*b*) Determine the specific gravity by picnometer or hydrometer and the oxides of nitrogen by the permanganate method. The total acidity is then obtained as described above, and calculate it as HNO_3. Determine the nitric acid by the nitrometer and subtract the percentage found from the total acidity, the difference being sulphuric acid.[2]

(*c*) The method of Mihr[3] eliminates the use of the nitrometer. He claims to determine mixed acids both fresh and spent with an accuracy of 0.1% by titration first of the total acids as described above and then of the sulphuric acid which remains after volatilization of the nitric acid by evaporation on the water-bath. If nitrosylsulphuric acid is present, it must first be decomposed by the addition of water before evaporation.[4]

Unaltered Cellulose may be estimated by boiling a small sample with sodium stannite[5] solution, carefully washing out the stannite with warm water and drying. The cellulose nitrates are dissolved by this treatment, leaving the unchanged cellulose as the residue. Or a weighed sample of the ester is shaken with ether-alcohol until no more dissolves filtered and the filtrate shaken with ethyl acetate and acetone until no more passes into solution. The ether-alcohol dissolves the lower nitrates and the ethyl acetate and acetone the higher nitrates, the undissolved residue being unchanged cellulose.

1. G. Coffetti and G. Maderna, Gaz. chim. ital., 1907, (2), **37**, 13; J.S.C.I., 1907, **26**, 1008.

2. The calculation of results would be as follows: Total acidity, say, 96.2%. Nitrogen by nitrometer, 16.8%; difference 79.4%. Then $\frac{79.4\times 49}{63}=61.76\%$ H_2SO_4, 49 being one-half the mol. wt. of H_2SO_4 and 63 the mol. wt. of HNO_3.

3. Fr. Mihr, Chem. Ztg., 1907, **31**, 324, 340; cf. A. P. Van Gelder, J.S.C.I., 1900, **19**, 508.

4. Although Lunge (Z. ang. Chem., 1904, **18**, 1681) finds this method gives values for nitric acid too high on account of a loss of sulphuric acid on evaporation, it has the advantage over the nitrometer for nitric acid in spent acids, for any cellulose nitrate in solution gives up its nitrogen in the nitrometer and is calculated as so much nitric acid. The author has worked with this method, and where the evaporation is conducted at low temperatures and water added once or twice during evaporation, very concordant results are obtained comparative with the nitrometer for unused mixed acids.

5. It is best to prepare the sodium stannite solution extemporaneously each time as required, and this may be done by adding a solution of sodium hydroxide to stannous chloride, until the precipitate first formed just dissolves.

The unconverted cotton may also be determined by boiling a fresh quantity of the air-dry sample (usually 5 gm.) with a saturated aqueous solution of sodium sulphide. After allowing to stand at a temperature of 40–60° for two or three hours the mass is decanted or filtered, and the process repeated in the same way. The insoluble residue, which consists of unnitrated cellulose is first washed with dilute HCl, then water, dried and weighed. In more accurate work the cellulose is finally ignited and the weight of the ash deducted.[1]

Preparation of Acid-Proof Nitrated Filter Cloth. According to Claessen [2] in order to prepare filter cloths so as to render them acid resisting, the cloth is first immersed in cold nitric acid of 40–50° Bé., then in concentrated sulphuric acid of about 60° Bé., finally washing with water until neutral. By this method a superficial nitration only is effected. According to the author, a filter cloth which will stand strong acids can only be prepared by weaving it from artificial threads made from pure nitrocellulose solution. F. Bayer & Co.,[3] state that completely nitrated cloth with 12.4–12.9% nitrogen, may be produced by immersion first in nitric and then in sulphuric acids,

1. The method of Lunge (J.A.C.S., 1901, **23**, 538) is satisfactory in more highly nitrated products, but is not applicable to the lower nitrates, which Lunge attributes to the fact that as these esters are prepared with less concentrated acid, they invariably contain oxycellulose. The reagent employed is an alcoholic solution of sodium ethylate, C_2H_5ONa, although sodium methylate or amylate would have the same effect and is made by dissolving 2 or 3 gm. metallic sodium in 100 cc. 95% ethyl alcohol, the solution being filtered and mixed with 100 cc. acetone. This reagent has no effect on unaltered cellulose, even after several hours' contact, while the cellulose nitrates are almost instantly decomposed with formation of a reddish-brown substance soluble in water (evidently the sodium salt of an organic acid, perhaps oxypyruvic acid, Will, Ber., 1891, **24**, 400). The operation is carried out as follows:

150 cc. of the 200 cc. prepared above is placed in a capsule or Erlenmeyer flask along with 5 gm. of guncotton. The mixture is heated to 40° or 50° on a water bath, and now and then shaken up during twenty or thirty minutes; or else it is allowed to stand at the ordinary temperature for a few hours. It is then allowed to settle. The brown-red solution is decanted from the undissolved portion; the latter is first washed with alcohol by decantation, and subsequently with water, whereby the brown substance is dissolved. The residue, consisting of cellulose, is filtered and washed with hot water, last of all with addition of a little hydrochloric acid. For ordinary work, it may be at once dried and weighed; for very exact estimations the water is removed by washing with alcohol, the residue is once more treated with 50 cc. of the reagent left over from the first treatment by keeping at 40° or 50° for fifteen minutes, and the operation is finished as above. The cellulose thus obtained does not yield a trace of gas in the nitrometer and gives only an extremely faint blue reaction with diphenylamine. It shows a very faint yellow color, produced by about 0.1 mgm. of the brown substance which can be removed by treating with a solution of 0.1 mgm. chloride of lime in 5 cc. very dilute hydrochloric acid; but this last treatment is really unnecessary, as the 0.1 mgm. does not appreciably affect the estimation. The results agree to 0.1 or 0.2%, if the weight of unchanged cellulose amounts to about 0.2 gm., which can be attained by employing a convenient weight of the cellulose nitrate.

2. Zeit. ang. Chem., 1906, **20**, 317; C.A., 1907, **1**, 1169.

3. Zeit. ang. Chem., 1906, **20**, 571; see also J. Wetter, E.P. 17302, 1897; F. Sparre, U.S.P. 850266, 1908.

and that the cloth so prepared is superior in quality and strength to that formed from weaving threads, being nearly twice as strong, and more resistant to acids and chlorine, while more open and porous than the latter. The author has often nitrated a whole undergarment (shirt or union suit) which was completely soluble in amyl acetate and contained 11.5–12% N.[1]

Cramer[2] recommends employing filter papers consisting wholly or partially of nitrocellulose, in order that incineration may be more rapid and complete. Such papers also offer the additional advantage of filtering very rapidly and of not being quite as hygroscopic as ordinary filter paper. In this respect they approach in properties the toughened or hardened filter papers. Where the filter is highly nitrated and burns too freely, a small amount of paraffin may be added to lower the speed of ignition.

1. To produce solid cloths for protective purposes against acids, D. Bachrach (U.S.P. 692102, 1902) recommends the addition of graphite or bitumen. About 10% of either is said to produce a cloth which will successfully resist long contact with corrosive chemicals. If it is desired to blend the nitrocellulose with the graphite or bitumen an acid-resisting solvent known as "picamer" (F. Greening, E.P. 22019, 1894) may be used to dissolve the nitrated cellulose. Picamer may be obtained by fractionating wood-tar distillate with chromic acid or alkaline potassium bichromate. See also the process of E. Müller, E.P. 12867, 1898.

2. Zeit. ang. Chem., 1894, 8, 269; see also Hargreaves, E.P. 24235, 1894.

CHAPTER III

THE NITRATION OF CELLULOSE

Historical. After Schönbein had announced his discovery of the ballistic possibilities of the cellulose nitrates, he immediately applied for patent protection for his discoveries, and the first United States patent for a cellulose nitrate was granted to him Dec. 5, 1846.[1] Apparently it attracted little attention in this country, on account of inability to control the manufacturing processes and the poor quality and stability of the ester produced. Eighteen years afterward, when Lenk introduced his process[2] and gave a specific series of steps for preparation,[3] interest in the manufacture became more general.[4] It was not until 1866, however, when Abel obtained protection for his pulping process,[5] and showed conclusively that the stability is greatly increased by breaking the cotton fibers in order to eliminate all acid from the inner filamentous canal, that the manufacture of the cellulose nitrates may be said to have assumed definite commercial importance.[6] Following up Abel's idea of the importance

1. U.S.P. 4874, 1846; E.P. 11407, 1846, taken out for him by his friend, John Taylor.

2. U.S.P. 43166, 1864; cf. F. Greening, U.S.P. 172995, 1875; E.P. 4806, 1876.

3. Among others, the impregnation of the nitrocotton with a solution of water glass.

4. Revy, U.S.P. 50083, 1865, used cotton spun into a lightly twisted yarn, and purified by previously washing in an alkaline solution. Like Lenk, water glass was used as the final acid neutralizant.

5. U.S.P. 59888, 1866.

6. This process with its refinements was widely used from the time of its patent protection until comparatively recent times. Nathan (J.S.C.I. 1909, **28**, 180) describes the process as formerly carried out at Waltham Abbey, England, as follows:

"The nitrating acid was composed of 3 parts of sulphuric acid of 96% monohydrate to 1 part of nitric acid of 91% monohydrate, thoroughly mixed and cooled. This acid was run from the store tanks into cast-iron dipping pans, holding about 220 lb. each, the pans being supported in an iron tank through which cold water circulated, to keep the temperature below 70° F. The dipping pans were provided at the back with gratings, on which to press out some of the acid from the charge. The charge of cotton waste weighed 1 lb. 4 oz., and on removal from the cooling box was passed from the back through an earthenware pipe in the partition running along the back of the pans, and raked by a dipper, as rapidly as possible, into the acid. After remaining in the acid bath for about eight minutes, the cotton was removed to the grating and a portion of the acid squeezed out by means of an iron lever having an iron plate attached to one end. After a charge

of acid elimination, Schaffner devised a method of washing under pressure to compel the fluids to more thoroughly permeate the fiber.[1] Still difficulty was experienced in removing the last traces of acid, and crushing to an impalpable powder,[2] neutralizing with ammonia fumes,[3] and the addition of chalk were among the expedients tried. Cotton was accepted as commercially the best material to convert into nitrate, and attention was turned to the varieties and mechanical treatment of the cotton before and during nitration. Cotton dust,[4] cotton carded, spun, and woven into hanks were experimented with, but while the former could not be sufficiently purified, the latter forms yielded a large increase in weight in nitration, but the purification processes were unduly long, due to the physical structure of the woven and matted fibers. Maxim made a series of improvements in mechanical appliances for nitration,[5] Chardonnet outlined the successive

had been removed from the dipping pan about 13¾ lb. of the mixed acid was run into it to replace the amount removed with the charge. The charge, now weighing with the adhering acid about 15 lb., was placed in an earthenware pot provided with a cover and transferred to the cooling pits, through which a stream of cold water flowed, and where it remained for twelve hours. During this period of digestion the conversion of the cotton into guncotton was completed. The contents of the pots were now emptied into a centrifugal wringing machine, and the bulk of the waste acid extracted. The guncotton was then removed from the centrifugal machine and placed in galvanized iron pans with long handles. These pans, when filled, were carried quickly across to the immersing tank and the guncotton thrown into a large bulk of water, the workmen standing by the tank and pushing the guncotton at once under the water with a stout wooden paddle. The immersing had to be done as quickly as possible, as, if the guncotton were allowed to come gradually in contact with water, it was liable to fume off. The immersing tank was fitted with a perforated copper plate, to allow the water to overflow, so that fresh water was constantly passing through the tank. The guncotton was kept well stirred by means of a wooden paddle. When 2 cwt. had been immersed, the inflow of water was stopped and the tank drained down. When all the water had been run off, the tank was filled up again with fresh water. This was repeated six times, or until the guncotton no longer tasted acid. When this stage had been reached the guncotton was wrung in a centrifugal machine, water from a hosepipe being turned on the guncotton for one minute during the wringing, and it was then ready for boiling.

"This process, although it undoubtedly produced a good guncotton, had certain disadvantages, and the amount of labor required was very great. The plant, although individual items were not expensive, very rapidly deteriorated, and the cost of renewals and replacements was heavy. Power was required to drive the centrifugal machines, large quantities of water were used both for cooling and immersing, and decompositions, both in the pans, pots, and acid centrifugals, were by no means an infrequent occurrence."

1. U.S.P. 60571, 1866; 93757, 1869; cf. Muschamp, U.S.P. 128450, 1872.
2. Mackie, U.S.P. 141654, 1873.
3. Anthony, U.S.P. 143865, 1873.
4. J. France, U.S.P. 420445, 420446, 1890; F. Greening, E.P. 8442, 1886.
5. H. S. Maxim, U.S.P. 430215, 1890; 454281, 465280, 1891; 474788, 479988, 1892; 544924, 1895; E.P. 4129, 1891. He impregnated the cotton with a saturated aqueous solution of sodium or potassium nitrate, dried, and then plunged this into a mixture of nitric and sulphuric acid, depending on the decomposition of the nitrate inside the cotton filament and the nitration of the same by the nascent nitric acid formed. He was the first to apply the "steeping" process in the United States, whereby the cotton was first immersed in a strong nitrating mixture and

steps in his process of pyroxylin manufacture and including centrifugal extraction.[1] Mowbray [2] and the Hyatts [3] made important improvements in connection with the nitration of paper for pyroxylin plastics, and the rapid advances made in photographic films composed of the collodions, all materially contributed to place the manufacture of the nitrates on a stable and definite basis.[4] The rise of the pyroxylin lacquer industry, the production of artificial leather and waterproof coatings, advances in pyroxylin plastics and celluloid, the attempts to produce artificial filaments in imitation of silk, and the coating of leather with dissolved pyroxylins, all contributed to the advance in manufacture and refinements in purification, by creating a large demand. This demand has steadily grown, both in volume and in exactness of purity, stability and solubility of the various cellulose nitrates produced. This demand in a large measure came as the result of successful search for suitable solvents for these esters, the development of the fusel oil industry as the means for the manufacture of amyl acetate—technically the most important and widely used liquid solvent for the cellulose nitrates—being most important and far reaching.

Classes of Cellulose Nitrates Produced in the United States. These may be reduced, for all practical purposes, to three different series of nitrating operations,[5] as follows: (1) Nitration by hand of a high grade of cotton for use in fine lacquers, artificial filaments and

after not over five minutes' immersion, taken out and without draining, transferred to a tank containing weak acid of many times more weight than the cotton, in which the latter was allowed to remain for several hours to "adjust" the nitration.

1. The novelty in this process (U.S.P. 455245, 1891) was in neutralizing all wash waters with an alkali and evaporating the same to dryness to recover the nitric and sulphuric acid used in nitration. Chardonnet's process was intended to produce a cellulose nitrate of great fluidity and solubility, especially applicable for the formation of artificial filaments.

2. See under Celluloid.

3. See Celluloid.

4. The earliest manufacture of smokeless powder in the United States was carried on by Charles Lennig, at Philadelphia, about 1850. He made a guncotton for small-arm charges out of long staple, fibrous cotton, but on account of accidents, the manufacture was soon discontinued. The next factory started was erected about 1870 by Carl Dittmar at Quincy, Mass., where a soft granulated powder was made, but this was soon abandoned. The first factory erected solely for the manufacture of modern smokeless powder was in 1890, at the U.S. Torpedo Station at Newport, R. I., being planned, erected and operated by Charles E. Munroe, under the direction of the government. It has continued and is to-day in regular operation. Following this, four factories were erected in 1891, one each in 1895 and 1898, and two in 1900. From this time the manufacture became rapid and more widely scattered.

5. A special grade of pyroxylin for the manufacture of collodion is, according to Sadtler (Handbook of Comm'l Industrial Chem., 296) put upon the market by the Schering factory of Berlin, and is made by immersing cotton for fifteen minutes in a mixture of equal volumes of sulphuric of sp.gr. 1.845 and nitric acids 1.40, at a temperature of 80°.

photographic film production. (2) Nitration of paper for the highest grade of pyroxylin lacquers, for coating silverware, the manufacture of continuous films and the preparation of transparent celluloid sheets. (3) Nitration of cotton for opaque preparations as celluloid collars and cuffs, artificial pyroxylin leathers and bronzing fluids, of a low nitric acid nitrating mixture, producing an irregular and not always soluble pyroxylin, but one in which the manufacturing cost is low, and the yield comparatively high. Actual factory processes of the preparation of these three classes of cellulose nitrates are described in detail subsequently.[1]

U. S. Ordnance Requirements for Nitrocellulose Manufacture. The following general instructions are prescribed by the U. S. Army Ordnance Department, as revised Apr. 18, 1908:

Nitrating. Cellulose of standard quality shall be dried at a temperature not exceeding 110°. When cold, this cotton shall be nitrated in mixed nitric and sulphuric acids. After nitrating, the nitrocellulose shall be washed in water before boiling.

Preliminary Boiling. The nitrocellulose shall be boiled at least forty hours, and with not less than four changes of water, in tubs so constructed that the nitrocellulose shall not come in contact with steam at a temperature greater than 100°. There shall be complete ebullition or boiling over the entire surface of the tubs. No alkali shall be used in this preliminary purification.

Pulping. The nitrocellulose shall then be pulped in fresh water to which may be added just enough sodium carbonate solution to preserve a slight alkaline reaction to phenolphthalein solution, the process to continue until the material is thoroughly and evenly pulped to a satisfactory degree of fineness, and shows a clean break when a handful is squeezed and broken into parts. During this process the water shall be changed to such extent as may be necessary to remove impurities.

Poaching. After pulping, the nitrocellulose pulp shall be run to the poachers, settled, and water decanted. The nitrocellulose shall

1. A process for the preparation of "soluble cellulose" has been described by P. Marino (E.P. 7430, 1908) in which ordinary pyroxylin is introduced into a mixture of alcoholic solutions containing about 10% (of the weight of the pyroxylin) of each of the following substances: manganese chloride, ferric sulphate, and sodium ethyl sulphate. The solution is diluted with ether or other solvent of pyroxylin and the pyroxylin is dissolved. A saturated solution of freshly precipitated ammonium magnesium phosphate is separately prepared in a quantity of sulphuric, phosphoric, or other mineral acid equivalent to about 10% of that of the solvent used with the pyroxylin. The two solutions are mixed and heated at 25° for twelve hours. The "soluble cellulose," which separates on cooling, is drained, washed and dried. The mother liquors are collected separately, and after dilution with spirit and neutralization of the mineral acid, they may be utilized for rendering wood or fabrics non-inflammable.

then be boiled six hours in fresh water, and during this time a total of not more than 10 gal. of carbonate of soda solution for each 2,000 lb. dry nitrocellulose may be added at intervals. This solution shall contain 1 lb. carbonate of soda per gallon. During this and all other boiling in the poachers the pulp shall be thoroughly agitated by mechanical stirrers. After boiling the nitrocellulose shall be allowed to settle and the clear water decanted as completely as possible. The tubs shall then be filled with fresh water, boiled two hours, settled, decanted, and refilled with fresh water. The boiling shall be then continued for one hour, and this process repeated three times, making a total boiling treatment in the poacher as follows:

Six hours' boiling with or without sodium carbonate, settle, change water.

Two hours' boiling, no soda; settle, change water.

One hour boiling, no soda; settle, change water. Repeat this one hour boiling, three more times.

Twelve hours' boiling, five changes water, total.

After boiling, the nitrocellulose shall have ten cold-water washes, each washing to consist of agitation by mechanical means, for one-half hour in a sufficient amount of fresh water, thorough settling and decanting clear water; at least 40% of the total contents of the poacher shall be drawn off. A sample shall then be taken for subjection to the various tests prescribed for nitrocellulose. Should the nitrocellulose fail to meet the required heat test, it must be boiled again with two changes of water, the time of actual boiling being five hours, without the use of alkali, and then it must be given ten cold water washes in the manner described for the regular treatment.

Treatment of Cotton Preliminary to Nitration. A large number of processes have been devised to facilitate the nitrating process by a preliminary treatment of the cotton before immersion in the nitrating fluid. These processes, either intentionally or otherwise, produce various hydro- and oxy-celluloses, which are more readily attacked by nitric acid than is normal cellulose. Furthermore, it has been found possible by preliminary treatment to so modify the cellulose, that the nitrated product therefrom is almost completely soluble in 95% ethyl alcohol, and hence economy in solvent is effected. Wirth [1] was the first to call attention to this preliminary treatment by his patented process in which the cellulose is first obtained in a pulverulent state (hydrocellulose) either by soaking for some time in sulphuric

1. E.P. 2519, 1878. See "Impurities Found in Cotton Badly Separated from Seed," C. Beadle and H. P. Stevens, Paper Making, 29, 102. They found the palisade cells, composed of hemicellulose extremely resistant to bleach.

acid of a specified density, or by heating to 100° with water containing 5% sulphuric acid. It was claimed that the conversion of the dry pulverulent cellulose into pyroxylin could then be carried out by the use of less acid. Chardonnet [1] simply heated to 150–170° cotton in the dry state, the application of the high temperature being intended to increase the solubility of the subsequently formed pryoxylin. His process had the advantage that the cotton must have been thoroughly dried and hence in an unusually receptive state for penetration by the nitrating fluid. In the Cross method,[2] instead of nitrating the fiber directly, cotton is subjected to the fumes of dry HCl gas for some hours in a closed chamber, the acid carefully removed by washing, and the powder when dried immersed in nitric acid only, whereby a gummy nitrated substance is formed, which may be purified by precipitating with water and washing. Zinc chloride [3] or caustic alkali, carbon disulphide and water have been advocated, the latter combination being the well-known viscose. A convenient method of preparing these amorphous degradation products of cellulose is to immerse cotton in a mixture of 5 parts by weight of 85.5% sulphuric acid with 3.5–4% concentrated nitric acid to which 2–2.5% water has been added. The cellulose is mechanically kneaded with the acid mixture, the temperature being kept below 3°. After an hour's time, 100–120 parts nitric acid of 48° Bé. are added, when the nitration is complete in about fifteen minutes.[4] The introduction of carbon dioxide gas with cellulose, by heating both to a temperature of 150°, is said to so modify the cellulose structure as to render subsequent nitration much less tedious and uniform. While previous disintegration of the cellulose fiber by treatment with sulphuric acid, zinc chloride or other powerful dehydrating agents, no doubt mechanically renders nitration much easier, the great point of advantage lies in the facility with which the acid may be subsequently removed. However, it has been proven beyond a reasonable doubt that the nitrated hydro- and oxy-celluloses and sulphuric esters decrease very materially the stability of the cellulose nitrate, and mainly for this reason, treatment previous to nitration is at present not extensively practiced.[5]

1. E.P. 19560, 1891.
2. Cross, Bevan and Beadle, E.P. 9284, 1892.
3. A. Luck and A. Durnford, E.P. 4769, 1895; cf. E.P. 116, 1904.
4. Patronenfabr. Saxonia, D.R.P. 198284, 1903.
5. See O. Schmidt E.P. 4769, 1895; 116, 1904; according to E. Nowicki (F.P. 402197, 1909) flax, hemp and ramie, or their wastes, are used as raw materials for nitration in the manufacture of pyroxylin, the fibers being bleached and purified and submitted to a mechanical preparation to bring them into a suitable state for the process. It is stated that since these fibers are devoid of cuticle, and when mechanically prepared, their central canals are open at both ends, they are far more amenable to the uniform action of the acid than cotton fibers. Moreover,

Teasing. As obtained from the factory, cotton waste contains colored threads which must be removed by hand, and often a considerable amount of foreign matter—wood, iron, rubber and strings—as well as knots and hard lumps. These are removed by a carding machine, where, by means of a series of iron-teeth rollers the fiber is pulled out and separated, and the lumps opened up. The apparatus of J. France [1] is useful for this purpose.

Where short- or long-fiber cotton is used as the source of cellulose rather than cotton waste, two methods of separating and picking are used in the United States, depending on the length of the

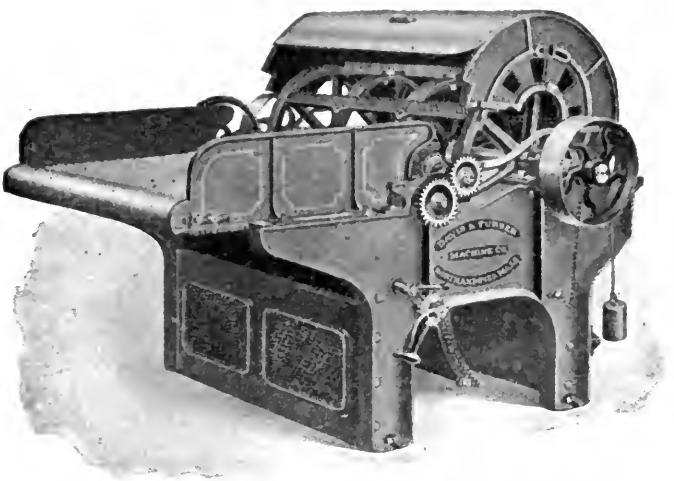

FIG. 5.—The Davis & Furber Mixing Picker for Cotton.

cotton fiber. For that length corresponding to "linters" and longer, the Davis & Furber "Mixing Picker" with pin-feed roll and shell (see Fig. 5) is the type of machine giving most satisfactory results.[2] In recent years, however, the application of cotton has been greatly extended by the gradual use of fibers of shorter length, and for picking such cottons the "Coggswell Mill" (see Fig. 6) has been the type

the finished product may be compressed to a greater density than nitrated cotton. If desired, these fibers may be mixed with cotton or other cellulose fibers before nitration.

1. E.P. 20964, 1889; 5364, 1890.

2. The machine is heavily constructed, consisting of a main cylinder fitted with special teeth, together with a feed apron and roll. The cotton is received by the feed apron, carried to the feed roll, the latter holding the stock while the revolving teeth in the cylinder tear it apart. The cylinder revolving at high speed carries the disintegrated cotton around and throws it out at the back of the machine, or into a suction pipe, where it is carried over into the dry house. These machines, which are of large capacity, open up the cotton in such a manner as to make it fluffy and feathery in appearance.

widely used, it consisting of two-ribbed disks revolving at high speed in opposite directions.[1] By means of connection with a Sturtevant or other suction blower and pipe connection to the dry house, which is usually located near the picking house, the cotton after passing through the picking machine is automatically carried over to the dry house, where by means of shut-offs located in the carrying pipes in the several drying chambers, the cotton may be blown into any dry-room desired.

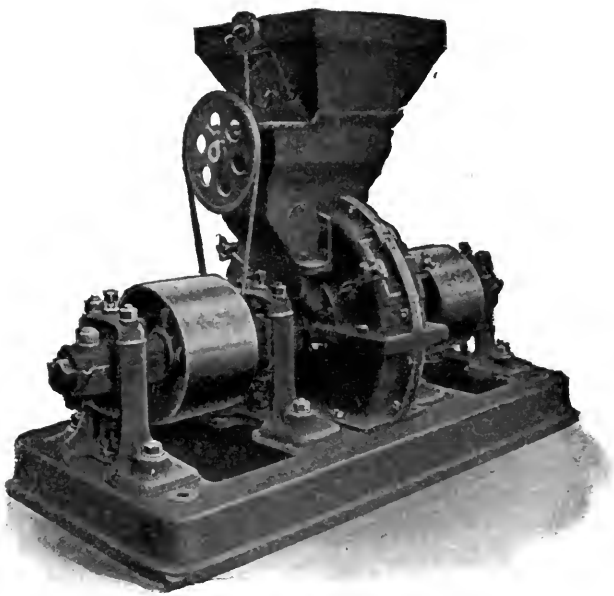

FIG. 6.—The Coggswell Mill for Picking Cotton.

Scouring. Before the cellulose can be considered in fit condition for nitration, it must be rendered "absorbent"[2] by removal of

1. Manufactured by the A. & F. Brown Co., New York city. The mill is run with two belts, one cross and one straight, which drive the grinding disks in opposite directions at a speed of about 2,000 revolutions per minute. All that is needed for the successful operation of the mill is a well built, well balanced counter-shaft for high speed, with a friction-clutch pulley for starting the mill up slowly, and a heavy, immovable foundation, so there will be little or no vibration. When properly set up, the mill requires no skilled labor to operate. The only adjustment needed is the turning of the tail pin one way of the other as the material may be wanted, coarser or finer. After the mill has been running a few months it is good practice to reverse the belts, thus giving a fresh wear to the grinding surfaces. The plates are about the only parts which require renewing, and under favorable conditions may last upward of two years.

2. On the surface of the individual fiber there is a protecting layer of wax and oily matter, while in the central canal is the dried remains of the protoplasmic material. The object of the boiling out and scouring processes, is, of course, the removal of these materials. When purified from adhering fatty and waxy materials

the natural occurring vegetable fats and waxes, and this is best done by boiling under pressure in zinc-lined wooden vats or kiers with dilute aqueous sodium carbonate (soda ash) [1] for several hours, and until a sample taken out, washed, dried and extracted with ether yields not more than 1% ether extract.[2] Whereas raw natural cotton will float on the surface of water—often for hours without becoming completely wetted—a properly scoured cellulose when thrown into water should sink within two minutes.

Bleaching. After the alkali from the scouring process has been entirely eliminated by washing, the coloring matter in the fiber is removed by bleaching,[3] usually with calcium hypochlorite [4] (bleaching powder). The method of G. J. Atkins [5] consists in the treatment of cotton with potassium chloride and "oxychloride,"[6] the claim being made that the silica is also removed.[7] The process of bleaching cellulose after nitration [8] has never passed beyond the stage of patent protection.[9] E. Berl and Klaye[10] and Berl and W. Smith,[11] have studied the influence of the previous treatment of cellulose, especially bleaching, upon the properties of the resulting nitrates in the laboratory, and C. Piest [12]

the cotton becomes very absorbent, which quality is explained on the supposition that the ripe cotton fiber is made up of a series of tissues of cellulose, separated by intercellular material, in this way forming a series of capillary surfaces capable of inducing considerable capillary contraction upon any liquid in which the fiber may be immersed.

1. The author's experience is that sodium hydroxide (caustic soda) should never be used, on account of its energetic action on cellulose. (See Viscose.) Crystallized sodium carbonate ($10H_2O$) is often employed on account of its supposedly milder action. See J. Parcon, Textile Mfr., **31**, 387.

2. According to A. Hertzog (Centrahlb. f. Textile Ind., 1890, **21**, 975) the German military authorities require a cotton which when treated with ether yields not over 0.9% fat; when nitrated does not disintegrate; and containing only traces of chlorine, lime, magnesia, iron and sulphuric and phosphoric acids. See also "Inspection of Cotton Waste for Manufacture of Guncotton," C. E. Munroe, J.A.C.S., 1895, **17**, 783.

3. C. Piest (Z. ang. Chem., 1908, **21**, 2497), found that bleaching appears to have a greater effect on the formation of reducing substances than does treatment with alkali, has determined by the reducing action of Fehling's solution on cotton (Schwalbe, Chem. Abst., 1907, **1**, 1696, 2179), the oxycelluloses giving lower nitration products than cellulose under similar conditions.

4. Where bleaching powder has been used, it is exceedingly difficult to wash out all traces of chlorine, a minute trace of which may cause the nitrated cotton to turn slightly acid after drying.

5. E.P. 7058, 1903.

6. Prepared according to E.P. 5596, 1901.

7. Removal of silica by digestion with hydrofluoric acid is never resorted to commercially.

8. G. M. Mowbray, U.S.P. 349658, 1886, the pyroxylin being decolorized by a hydrochloric acid acidified solution of oxalic acid.

9. For structure of cotton fiber as affected by bleaching see Geo. Witz, Bull. Soc. Ind., Rouen, 1883, **10**, 416; Nastjukow, Bull. Mulh., 1892, 493; R. Haller, Z. Farb. Ind., 1907, **6**, 125.

10. J.S.C.I., 1907, **26**, 1157.

11. Z. ges. Schiess- u. Sprengstoffw., 1909, 81.

12. Z. ang. Chem., 1909, **22**, 1215.

has repeated and corroborated their work commercially. Cotton was subjected to the following treatments: (1) Bleaching for forty-eight hours in bleaching powder solution of 3–5° Bé; (2) and (3), bleaching for eight days in solutions prepared by mixing 2–5 k. and 5 k. respectively of bleaching powder with 5 l. of water; (4), mercerization by treatment with 18.5% caustic soda lye for twenty minutes; (5), heating for ten hours at 150° in a current of carbon dioxide.[1] The results obtained showed that with a given nitrating acid and temperature of nitration the nitrocellulose prepared from strongly bleached cotton has a somewhat lower nitrogen content and a considerably higher solubility in ether-alcohol than that prepared from ordinary cotton. The solubility of the nitro-compound in absolute alcohol increases as the cotton is more strongly bleached. Nitrocellulose from strongly bleached cotton is more difficult to stabilize than that from ordinary cotton. The stabilized nitrocellulose is more soluble in ether-alcohol than the non-stabilized product. Nitrocellulose from mercerized cotton has a slightly lower nitrogen content, a much higher solubility in ether-alcohol, about the same solubility in absolute alcohol, and is more difficult to stabilize than that from ordinary cotton. Nitrocellulose prepared from cotton which has been heated in a current of carbon dioxide has a slightly higher nitrogen content, about the same solubility in absolute alcohol and in ether-alcohol, and is more difficult to stabilize than that from ordinary cotton. O. Guttmann,[2] has made experiments during a period of two years with samples of cotton, from English and German sources, the history of which was known, from their obtainment from the cotton-spinning works to the finished, and in some cases, stored nitrocellulose. Some of the samples of cotton were unbleached, others had been strongly bleached with bleaching powder; and some were highly contaminated with dust, etc. The results obtained confirm those of Piest, namely, that the stronger the degree of bleaching of the cotton, that is, the higher the content of oxycellulose, the more difficult it is to stabilize the nitrocellulose obtained therefrom, and the more soluble is the nitro-derivative in ether-alcohol, and in addition the solution has a lower viscosity.

Drying.[3] One method is to place the cotton in a large steam-jacketed iron cylinder, steam being made to circulate in the surround-

1. D.R.P. 199885, 1908; abst. J.S.C.I., 1908, **27**, 937.
2. Z. ang. Chem., 1909, **22**, 1717.
3. The object of the removal of moisture is to prevent dilution of the nitrating fluid. Damp cotton nitrates much faster, is more difficult to control, fumes more readily, the yield is decreased due to solution in the nitrating acid, the spent acid is further diluted by the water in the cotton, and the finished product forms a more fluid solution.

ing jacket, the temperature of the inner chamber being from 70–90°. Circulation of air is maintained by means of a compressed-air reservoir, and enters the cylinder from the bottom. From the 7–10% moisture present in the raw cotton at the end of five or six hours, this should be reduced to not over 0.6%.[1] Or the cotton may be placed in large rooms on wire screens heated from below by series of steam pipes, a slow current of dried air being passed under the shelves and through the cotton. As soon as the drying process has been completed the heat is preferably either continued until the cotton is to be used or the charges are weighed out into milk cans or other suitable receptacles, covers clamped air-tight and allowed to cool.[2]

Acids used in Nitration. The nitric[3] and sulphuric acids universally employed are commercial products of a high degree of purity. The sulphuric acid must be reasonably free from lead, and the nitric acid contain no hydrochloric acid. It is also important that they should contain no solid impurities which might adhere to the nitrocotton, and which would interfere with the subsequent recovery of the waste acid or lower the stability. In recent years it has been possible to obtain at a reasonable cost Nordhausen fuming sulphuric acid, often called "oleum," and its use has enabled a larger proportion of spent acid to be revivified economically than was possible when the strongest commercial sulphuric acid was of 63° or 66° Bé. strength. Whereas formerly it was the custom to purchase acids of a certain strength, and mix them in the desired proportion, discarding the spent acid, now the system is being adopted of mixing large quantities in steel or cast-iron tanks ("acid eggs")[4] analyzing the mix-

1. A weighed sample should then be taken from the top of the cylinder and the moisture determined by drying in a water bath at 98–100°, for one hour and re-weighing. For description of suitable apparatus see Sanford, "Nitro-explosives," 59.

2. During the cooling, which requires from four to six hours—depending on the size of the charge—the cotton often re-absorbs about 0.5% moisture, thus making about 1% in the cotton just before nitration.

3. For action of nitric acid on cellulose see H. de Mosenthal, J.S.C.I., 1904, **23**, 292.

4. Saposchnikoff (J. Russ. Phys. Chem. Soc., 1904, **36**, 669; Z. physik. Chem., 1905, **51**, 609) has studied the behavior of mixtures of sulphuric and nitric acids. He finds that addition of water to mixtures containing less than about 60% of sulphuric acid causes a diminution in the vapor pressure, the effect being less as the percentage of sulphuric acid is increased. With mixtures containing more than 60% of sulphuric acid, however, addition of water causes an increase of vapor pressure. This is due to the fact that with high percentages of sulphuric acid some of the nitric acid is dehydrated to nitric anhydride, which, on the addition of water, is again converted into nitric acid. Also that a satisfactory acid mixture for nitration purposes must fulfill two requirements. It must contain sufficient nitric acid to give the desired reaction-velocity and degree of nitration; and its properties must be not appreciably altered by the water separated during the nitration. Mixtures which best answer the first condition, have, however, the disadvantage that the volume-concentration of the nitric acid is strongly diminished

ture, and adjusting the composition by the addition of nitric or sulphuric acids, to obtain the desired percentage composition. The nitrating acid consists of the maximum of waste acid, which can be used and still be built up to the desired percentages of HNO_3 and H_2SO_4. In the preparation of the lower forms of the cellulose nitrates the water is always increased in the nitrating mixture above that required for guncotton.

The nitrating acids are usually stored and transported in iron drums or tank cars. It has been found that the concentration of the sulphuric acid must not be much below a sp.gr. of 1.60, or the iron is attacked, hydrogen evolved and the acid decomposed. Mowbray's claim [1] for the use of Bessemer steel tanks as being superior on account of insolubility in sulphuric and nitric acid has not received general acceptance. Iron is brought into the passive state by concentrated nitric acid, which, therefore, has but very little dissolving effect on it.

Direct Dipping Process. The following description of this process is that of Sir F. Nathan.[2] The installation consists of parallel double rows of long iron tanks known as "coolers." Iron pots termed "dippers" in which nitration is carried out stand in the coolers, 62 to each cooler. Sliding wooden covers rest on the coolers to guide the fumes from the dippers into earthenware pipes with openings at intervals, through which they are drawn by exhaust fans. The mixed acid, either cooled or warmed as necessary, is carried by lead pipes placed between each row of coolers, and is supplied to the dippers through earthenware cocks at intervals.

Nitration. The water in the coolers is kept at 15°. The dippers, having been placed in position in the coolers, are each filled with 127 lb. of mixed acid by measurement, from the acid taps. 4½ lb. of cotton waste are steeped in each dipper. To minimize decompositions each charge of cotton waste is added in about ten installments. The wooden covers are only removed to allow steeping to be done, and are then at once replaced. The temperatures of nitration are: Initial temperature of mixed acid, 15°; maximum after steeping,

by addition of water. A mixture must therefore be chosen which has a vapor pressure less than the maximum, but which will bear an addition of water without notable alteration. In the case of mixtures containing a relatively high percentage of sulphuric acid, an addition of water must be made in order to prevent dehydration of the nitric acid, with formation of nitric anhydride. The composition of acid mixtures for nitrating purposes may be varied within wide limits, but the author considers that for the preparation of high nitrated guncotton, the best results will, in general, be obtained with mixtures of nitric acid of sp.gr. 1.48 with from 65–75% of sulphuric acid. Probably the most suitable mixture is nitric acid, 24.29%; sulphuric acid, 65.80%; and water, 9.91%.

1. U.S.P. 350498, 1886. See Fig. 7.
2. J.S.C.I., 1909, 28, 181.

25°; temperature at end of nitration, 20°. The duration of the nitration varies according to the output required from the plant. One, two, or three shifts may be worked per twenty-four hours, and the time of nitration may therefore be twenty-four, twelve, or eight hours respectively.

The average composition of the mixed acid for a twelve hours' immersion is as follows: Sulphuric acid, 75.0%; nitric acid, 15.75%; nitrous acid, 1.30%; water, 7.95%. For an eight hours' immersion a higher percentage of nitric acid and less water is used; for a twenty-four hours' immersion less nitric and more water. The average composition of the waste acid for a twelve hours' immersion is: Sulphuric acid, 77.8%; nitric acid, 11.0%; nitrous acid, 1.5%; water, 9.7%.

Recovering the Waste Acid. When the nitration is complete, the "dippers," covered with light aluminum lids, are placed on barrows, wheeled to the centrifugals, situated at the end of the "coolers," and the whole contents tilted out into the centrifugal. Four dippers are loaded into each centrifugal, and the guncotton having been uniformly spread round the basket, the centrifugal is run for six minutes, to remove waste acid. At the end of that time about 1 lb. of waste acid is still adhering to each pound of guncotton. The centrifugal cover, made of light aluminum, is not fixed to the centrifugal in any way, so that as little resistance as possible may be offered when there is a decomposition. This is the usual arrangement in the case of acid centrifugals. The cone of the centrifugal projects through a circular opening in the center of the lid and is covered by a small loose aluminum box. Small holes are cut in the sides of this box, and are of service in warning the workmen when there is a decomposition, as fumes are generally seen to issue there first.

Drowning the Guncotton. When the waste acid has been removed the guncotton is quickly lifted out of the centrifugals and thrown under the revolving paddles of the drowning tanks, which immediately immerse it. The men who do the discharging are provided with rubber gloves and wear thick flannel hoods, which completely cover the head, arms, and breast. The hoods are fitted with strong glass windows, and are connected by light rubber tubing to a supply of pure compressed air.

Prewashing. After a given quantity of guncotton has been drowned, the water in the tanks is run off and the guncotton thrown onto draining tables forming part of the drowning tank. It is then loaded into the prewashing centrifugals, the acid water wrung out, and washed for a few minutes with cold water from a hose, to remove adhering acid. No special precautions, however, are taken to remove all

acid at this stage. The bulk of the water having been removed, the guncotton is loaded from the centrifugals into bogies, and conveyed to the boiling house.

The 62 dippers in each cooler form a "charge." Eight charges are worked by each shift. The yield is 159% of dry guncotton on the dry carded cotton. The output per shift consisting of seventeen men is, therefore: $4.5 \times 159 \times 62 \times 8 \div 100 = 3549$ lb.

Nitration of Cotton by Hand. One at least, of the large pyroxylin manufacturers in the United States nitrates by hand a special grade of cotton which produces a very superior pyroxylin adapted for lacquers and bronzing liquids. Whether due to intentional misrepresentation to cover "secret processes" or a deficiency of intimate knowledge of the several steps involved, a large number, if not the majority of the recipes and methods to be found in text-books and the technical literature for preparing a nitrocotton best suited to this class of work are either directly misleading in some essential step, or else the methods of manipulation described are vague and lacking in detail. Aside from the interest attached to the method about to be described from the fact that the ester so produced has for many years answered the requirements of an exacting trade as to clearness, elasticity and strength, the details represent the successive steps in a commercial process in which there have been no recent essential changes, and in which, therefore, the nitrocotton produced has stood the test of time as regards commercial acceptability.[1]

That grade of medium-fiber Southern cotton known as Memphis Star is used in the unbleached state, the cotton being twice scoured. The first treatment consists in steaming in a 3% (calculated on the weight of cotton) solution of sodium carbonate crystals (washing soda[2]) for six hours in zinc-lined wooden vats, with tightly fitting

1. Of the many methods for the preparation of pyroxylin to be found in the literature, the very great differences from each other both in composition of acid and method of procedure, make it quite a hopeless task to one of but little experience to select a method which will produce a given product. The lack of explicit information as to the condition of the cotton, temperature of nitration, duration of the operation, how to overcome the exigencies that are apt to arise during the progress of the process, yields, nitrogen content and solubility in a given solvent, render a great number of published methods incomplete, or of little value. Perhaps in no other series of industries are the factory details more carefully guarded than in the industrial preparation of cellulose nitrate compounds.

Memphis Star is an upland cotton, and its fibers are very soft, moist, and elastic, of light creamy-white color. This color is partially lost during scouring and nitration. The staple is short and the twist inferior to other grades, the straight, ribbon-like filaments being quite numerous. The cotton is carded but not bleached or scoured. It contains considerable half and three-quarters ripe fiber, which is extremely thin and transparent, distributed throughout the bulk of the pattern.

2. It has been repeatedly asserted that factory experience apparently shows that crystallized sodium carbonate (Na_2CO_3, $10H_2O$) exerts a less drastic action on the cotton filament than the anhydrous form (soda ash) of sodium carbon-

zinc-lined covers. At the end of this period the cotton is washed with water until the alkali has been practically removed, when the operation is repeated. This time the steam is kept on for ten hours, and the amount of sodium carbonate reduced to 2%. The final washing is continued until the cotton is neutral, the wash water being clarified by passing through large sponge or sand filters. Scoured in this manner, dried cotton seldom gives more than 0.28% ether extract. Although in appearance cotton prepared in this manner is not as white as when bleached, the treatment results in but little change of the cellulose molecule.

The nitration is conducted in 5 gal. stoneware pots with tightly fitting lids in the top of which has been bored a $\frac{3}{16}$ inch hole for the escape of any fumes, and which also serves to warn the workmen of the commencement of burning or "fuming" of a "batch." The cotton is dried at 105° until no further loss in weight occurs, a 2¼ Av. lb. charge placed in air-tight containers similar to milk cans with rubber gaskets, and kept in a room at 35–40° until ready for use. The charge of 2.1 U.S. gal. of nitrating mixture at a temperature of 56° is run into each pot, the latter having previously been placed in a water bath consisting of a wooden vat with perforated bottom and heated by steam. The acid mixture consists of 85.1–85.2% total acids, of which 56% is sulphuric acid, leaving 29.1–29.2% nitric acid and 14.8–14.9% water. The cotton in small portions is immersed in the acid by means of aluminum forks, the handles of which are rubber covered to better prevent slipping. The heat of reaction from immersion of the cotton causes the contents of the nitrating pots to rise about 8–9° above the entering temperature of 56°. After thoroughly stirring the cotton into the acid, the false bottom of the water bath is raised until the pots are entirely out of the water, where they remain until the temperature has subsided to 56° again, which usually requires about an hour. During this first hour the cotton is stirred only enough to guard against local overheating[1]. At the

ate. The author has wondered if the small amounts of hydroxide sometimes found in commercial soda ash could account for the above belief.

1. Whenever red fumes are observed during the nitration process, the mass in the pots must be carefully but very thoroughly stirred. During the entire process the cotton must be stirred no more than absolutely necessary, for stirring disintegrates the fiber, and causes loss in washing. One of the main points in favor of the Thomson displacement process is the fact that the cotton is not broken during nitration, and hence larger yields are obtained. If it is desired to make the cotton more fluid, the initial nitration temperature may be raised to 58° or 59°, and if this does not have the desired effect, instead of allowing the pots to cool to 56° in the air as in the original process, they may be placed in the water bath at once. It is the first temperature that governs most strongly the production of a fluid nitrocotton. From the action of the first batch in the nitration mixture subsequent batches can be modified. Three men nitrate 65 pots in one working

end of six hours' immersion the nitration is considered complete. The contents of the crocks are dumped into a centrifugal, the acid extracted and the cotton "drowned" by plunging into a large volume of cold water in the usual manner. Neutralization is effected by boiling alone, and without the addition of alkali.[1] The nitrocotton is pulped, and dried on cloth screens, by means of a current of filtered dry air which enters so as to pass through the nitrocotton from the bottom upward. The ceiling and walls of the dry-house are plastered, the cement floor being covered with linoleum or rubber.[2] The workmen wear sewed rawhide sandals. The temperature is automatically regulated between 30–35°. Usually three days are required for drying, the moisture being about 22% as the nitrocotton leaves the hydroextractor. The nitrogen per cent is within the limits 12.65–12.75, usually nearer 12.65%.[3] The nitrocotton is above 98% soluble in ether-alcohol, above 96% soluble in a mixture of amyl acetate 60 (by volume) and benzine 62° Bé., 40, this latter solvent mixture being of much more importance in the lacquer industry than ether-alcohol, the latter solvent being seldom used. The viscosity[4] is governed in the nitrating pots largely by the following observations:

day of ten hours. In nitrating, if it is found that the physical condition of the pyroxylin will stand it, the temperature of the water bath is raised from 55° up to as high as 65°, this rise tending to increase the fluidity and clearness of the pyroxylin when dissolved, but at the same time slightly decreasing the yield. Notwithstanding theory to the contrary, it is the observation of the nitrating workmen that on damp, heavy, foggy days, the nitric acid in the nitrating fluid decomposes more readily; the nitrocotton tenders more easily in the pots and requires more careful attention to preserve the yield. The value of sulphuric acid is not, as has often been assumed, due merely to its power of combining with water formed during the reaction, but also perhaps to the formation of sulphuric acid esters, subsequently converted into nitric esters. The longer then, within reasonable limits, the cotton is left in contact with the acids, the more complete probably will be the conversion into nitric acid esters. The sulphuric esters according to this view, therefore, are merely transition bodies.

1. In corroboration of the experience of others, it has been found that when alkali is omitted, the pyroxylin requires fewer washings for neutrality, and gives longer stability tests.

2. To prevent vermin from entering the building, and the impalpable pyroxylin dust collecting in cracks.

3. At this particular works a large number of experiments have been undertaken to determine the reason why a pyroxylin solution once filtered will, or will not, deposit from 1–6% solid matter (lower cellulose nitrates) upon standing in solution in daylight. Careful comparisons of nitration formula, viscosity, original solubility and percentage of nitrogen have not resulted in conclusive results. It is not a matter of room temperature and is a subject of considerable moment to manufacturers of lacquers, photographic films and artificial silks. Pyroxylin intended for artificial leather and the less expensive bronzing fluids is never dried, but hydroextracted either in centrifugals or hydraulic presses, and the remainder of the moisture removed by displacement with a pyroxylin non-solvent as denatured ethyl alcohol or the lower fractions of fusel oil.

4. A desired viscosity is obtained by blending pyroxylins of a viscosity higher and lower than that required. The "viscosity factor" is an arbitrary number used, and obtained by taking the grams of pyroxylin per hundred cc. in a given

(1) If the first pot nitrated tenders too much, as indicated by the "feel" with the stirring rod, the viscosity will be too low, and subsequent batches are to be put in at a slightly lower temperature, perhaps 53–54°.

(2) If the cotton falls to the bottom of the nitrating fluid, feels harsh, and but little chemical action is evident, the acid is probably deficient in nitric acid, and a higher temperature of immersion must be taken, or the nitrocotton will have a high viscosity and in the majority of cases a high insoluble residue in amyl acetate-benzine.

(3) If the cotton in the nitrating acid floats to the top (heaves), buoyed up by the nitric oxide fumes evolved, this indicates a slight excess of nitric acid. Such a batch must be watched closely and stirred at frequent intervals to prevent fuming.

(4) If the cotton in the nitrating bath feels soft ("mushy") the sulphuric acid is evidently in excess, and if the heat of reaction does not give the normal rise,[1] the yield will be poor, and probably contain much insoluble matter.

While the length of time is stated as six hours' immersion, climatic conditions and the humidity of the atmosphere apparently makes a difference in the nitration time, and irrespective of the length of immersion the batches are considered finished when they have a certain softness or "feel" to the workmen when the batch is stirred with a fork. Large yields are not sought, but rather fluidity and solubility in the nitrocotton is the first consideration. Something in the way of yield must be sacrificed in order to obtain high fluidity, because the higher temperatures required to obtain a desired viscosity always cause an appreciable loss of nitrated cotton, not only from passing into solution in the reacting mixture, but also in the subsequent washings, especially after having been pulped.

The dried product is tested for its suitability for certain classes of lacquers and bronzing fluids, by dissolving 1 gm. in 60 cc. amyl acetate and 40 cc. benzine.[2] The following observations of the solu-

solvent combination and multiplying by the time required to pass through the orifice of the viscosimeter.

1. It requires ordinarily about fifteen minutes to attain the maximum rise, and an additional thirty minutes for the temperature to return to that of the nitrating acid before cotton immersion.

2. The pyroxylin is first moistened with 30 cc. amyl acetate and after having been stirred until homogeneous, is diluted with the balance of the solvent, previously mixed. In this manner much more rapid solution is effected than by the addition of 100 cc. of the above mixture at one time; benzine, it will be remembered, is a non-solvent of any form of cellulose nitrate, being used only because it is the cheapest commercial anhydrous fluid. Cellulose nitrates may be more soluble in amyl acetate than in the above mixed solvent, but the latter is used because it approximates the formulas used in manufacture. A pyroxylin which entirely dissolves in both amyl acetate and amyl acetate-benzine 60 to 40, will have an appreciably higher viscosity in the latter solvent mixture.

tion so formed have been found generally true for the specific nitrating formula given above.[1]

If the solution in amyl acetate-benzine is:

(1) Thin and turbid, the total percentage of nitric and sulphuric acid was too low, that is, there was too much water present during nitration.

(2) Heavy and turbid, the temperature of the nitrating acids was too low at the time of immersion, or the cotton was not thoroughly stirred therein, probably the former.

(3) Thin and clear, yield about 140–144% (calculated on the weight of the cotton as dried at 105°); all nitrating factors right.

(4) Heavy and clear. Nitric acid high, sulphuric acid low; temperature low, nitration process fully six hours, cotton floated to top of batch during nitration period and required careful attention.

It is evident that a certain amount of skill and cleverness embraced in the word "experience" is necessary for the success of any technical process, and especially in a process of nitration which introduces several variables. But it is not too much to state that careful attention to the details as above enumerated in the hands of a person of moderate experience will enable that person to continually produce a nitrocotton especially adapted to the preparation of modern pyroxylin lacquers.

Nitration by Centrifugals. Nitration of cotton was originally carried on in iron dipping pans, fresh acid being added from time to time, and after squeezing out the bulk of the acid, the cotton was transferred to earthenware pots to complete the nitrating process. Later on the charge of cotton was increased by the use of larger pots or cast-iron pans holding up to 10 k. of cotton, the process being carried out with carefully prepared acid mixtures, which were fortified, as at present, by the addition of stronger acids. In 1890 Chardonnet patented the process[2] of placing the nitrated cotton in a centrifugal in order to obtain the maximum of spent acids, this being the first definite application of the centrifuge to the nitration of cotton. Kron[3] made some mechanical improvements on Chardonnet's method, but

1. These generalizations are mean results obtained from testing each day's product for solubility during many months, and in connection with the daily reports from the nitrating house as to the deportment of the cotton in the nitrating acid. Where the nitric oxides are in excess in the nitrating mixture, a higher rise in temperature than usual occurs when the cotton is first immersed; incipient decomposition of the nitric acid is more liable to occur (i.e. the spent acid is unusually weak); the temperature falls more quickly after the maximum has been reached; the time of immersion is decreased; and more attention by the workmen is required to prevent fuming and to preserve the normal yield.

2. E.P. 5376, 1890; abst. J.S.C.I., 1891, **10**, 566.

3. E.P. 13612, 1891; abst. J.S.C.I., 1891, **10**, 1029.

it remained for Selwig and Lange in 1891 [1] to combine the nitrating and squeezing of the spent acid in one and the same receptacle, a centrifuge. Their original apparatus consisted of a perforated revolving basket inside the nitrating shell, the cotton being converted in the machine, after which the mixed acid was allowed to run off, the remainder being removed by the centrifugal action. The nitrocotton was then immediately taken out and immersed in a large volume of running water.[2] L. Morane[3] has devised a method in which the cotton is nitrated in a slowly revolving drum, the speed of rotation being afterwards increased so that the acid is forced through a perforated casing, up helical partitions in the drum, where the acid flows over the cotton again. By this device the cotton avoids contact with the air during nitration, and so prevents the escape of fumes and the absorption of moisture by the nitrated cotton while still saturated with the acids.[4] This idea of "acid circulation" has been extended by Johannes Selwig,[5] the best known patterns being those manufactured by Selwig & Lange, of Brunswick, Germany.

The principal feature of this firm's nitrating centrifugals consists in the combination of the nitrating apparatus with the centrifugal.

The latest and most improved construction of this new centrifugal (Figs. 7 and 8) is an acid circulation device, by means of which the entire quantity of acid contained in the centrifugal, and not that contained in the drum only, works on the substance to be impregnated and participates in the nitrating process. It is worked from underneath and with a firmly fixed spindle, whose drum *d*, and also, at the same time, the iron casing surrounding it, can be filled with acid without the bearing of the spindle coming into contact with the same. The acid is led off, after the nitrating process is completed, by a special escape-cock *h*, made of stoneware, or by a valve made of steel casting.

A second and smaller escape-cock *k* permits the acid in the centrifugal to be collected separately by itself. For the purpose of the circulation of the acid, the middle hollow part of the drum, the so-called drum-cone *t*, is provided with a large number of perforations, and lengthened downward in the form of a ring. Above the bottom of the casing, and at a small distance from it, lies a second ring *r*, whose

1. E.P. 10747, 1891; abst. J.S.C.I., 1892, **11**, 635.
2. Selwig obtained patent protection (E.P. 6409, 1903) for a combination of nitrating and washing apparatus, where the nitrocotton was washed with steam after nitration, without being removed from the centrifugal. It is not used in the United States to the author's knowledge.
3. E.P. 24561, 1899.
4. See E.P. 3177, 1902, J. B. Alliott.
5. U.S.P. 764776, 1904; E.P. 6409, 1903; 7511, 26666, 1904; 23920, 1905; F.P. 342602, 1904.

outside edge reaches almost to the side of the casing, while its inner nearly touches the extension of the drum-cone already mentioned above.

There is, therefore, by this arrangement, a direct connection between the interior of the drum-cone and the outside part of the inner chamber

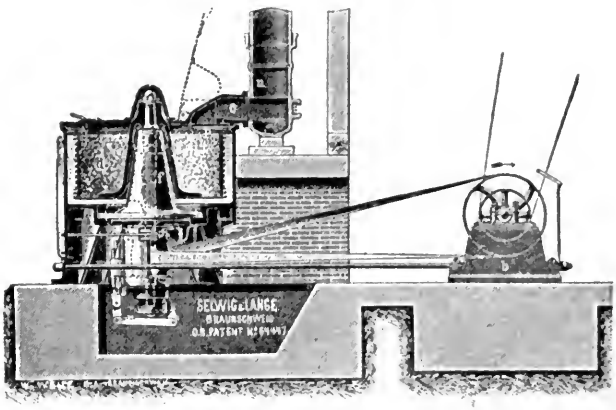

Fig. 7.—Selwig & Lange Nitrating Centrifugal, with "Acid Circulation." (*Side view.*)

of the casing. If the centrifugal is now filled to a certain height with acid, and the drum put into rotation slowly (from 24–30 revolutions per minute), then the acid participates in the motion, its surface, while sinking in the middle of the drum, rises at the edge of the casing,

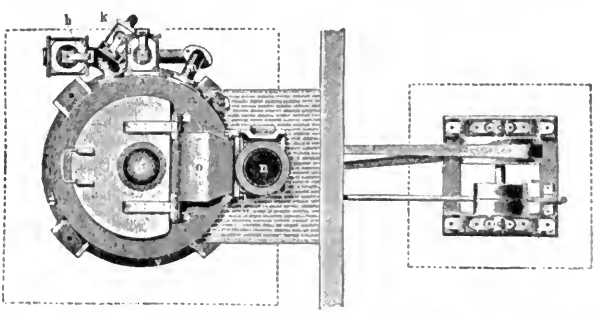

Fig. 8.—Selwig & Lange Nitrating Centrifugal, with "Acid Circulation." (*Top view.*)

where, therefore, a higher pressure of the acid exists than that in the middle of the centrifugal. This high pressure is now transmitted to the hollow chamber of the drum-cone, and causes the acid to flow through the holes of the cone into the drum, where a lower pressure

exists. The acid now flows through the substance under treatment in a radial direction, making its exit through the perforated walls of the drum into the outward chamber of the casing, from where it flows back again, under the floor *r*, into the interior of the drum-cone.

According to this, the acid circulates through the cotton or other substance as long as the drum continues in rotation.

The centrifugal can be made to move quickly or slowly as desired, by putting one or other of the two loose pulleys—which are arranged on the transmission shafting at both sides of the fixed pulley, and which run at different speeds—on to the fixed pulley, the quick-running pulley being then driven by the principal transmission, the slow-moving pulley by a slow-moving intermediate transmission.

In order to exhaust the nitric acid vapors during the process, and to throw off the material undergoing treatment, the centrifugal is connected with a stoneware exhauster by means of the support *o* and the collecting-pot for condensed acid *n* arranged near it. This conveys the vapors to the chimney or to a condensation appliance.

From the above details, it will be seen that by means of the acid-circulating appliance an uninterrupted intimate mixture of the acid is effected, and in such a manner that at a certain fixed moment acid of the same composition and with the same temperature can be made to penetrate throughout the material under treatment. When, therefore, proper raw material of a regular texture is used, a nitrated product is obtained which possesses great uniformity and approximately the same chemical and physical characteristics.

In the older form of nitrating centrifugals, the cast-iron bottom of the centrifugal was also the bottom of the vessel containing the acid, a construction which hindered the work and rendered frequent repairs necessary, for the cast-iron could not resist the effects of the acid for any lengthened period. The new type of centrifugal built by Selwig & Lange is provided with patent acid-holders[1] which are made entirely of steel plate, so that the acid cannot come in contact with cast iron at any part.

At the lowest point of the oblique bottom the escape *q* is fixed, the pressed conical interior of the bottom surrounds the conical upper part *t* of the cast-iron bearing, and the angle-iron riveted on to the bottom of the holder rests on the under frame, to which it is firmly held by means of a few clamp screws. When these are loosened and the conduction pipes screwed off, the entire holder can be easily taken down. In case, therefore, an acid-holder becomes defective, it can be easily and conveniently removed for repairs and its place supplied

1. D.R.P. 168852, 174576, 1906.

by a reserve holder. Another advantage consists in the fact that air, which enters through a few holes on the angle-ring fixed on the bottom of the holder, can be sucked through the intermediate chamber between the upper conical part *f* of the bearing and the conical inner part of the holder. The spindle bearing is thereby well cooled and ventilated and withdrawn completely from the influence of the acid vapors.

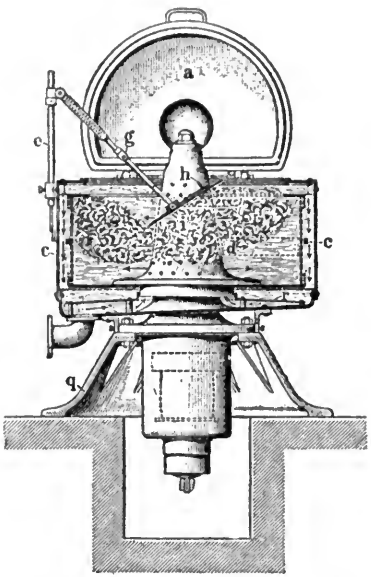

FIG. 9.—Wolfshohl Automatic Cotton Steeping Appliance for Nitration, by means of which the service of one workman may be dispensed with, the volume of Cotton Nitrated per day and its Quality being Unaffected. The manufacturers also claim that the quality of nitro-cotton produced is more uniform both in nitrogen content and solubility.

Another improvement in nitrating centrifugals consists in the automatic cotton-steeping appliance (Fig. 9) invented by H. Wolfshohl, Spandau, near Berlin,[1] first patented in England in 1905, the corresponding French patent being No. 359625 of the same year.

It has been used to some extent in the United States, and apparently with satisfaction. It is claimed by the inventor that its use materially reduces the volume of nitrogen oxide fumes. (In this connection see Selwig & Lange, E.P. 11929, 1900; F.P. 213983, 1891.)

Up to the present the usual method of feeding the nitrating centrifugal consisted in one workman throwing the material in small quantities into a drum which is filled with acid, the drum rotating slowly all the time, while another workman pushed the substance under the acid by means of a fork. This method, which is somewhat inconvenient, has been considerably simplified by means of Wolfshohl's patent, and to such an extent that the second workman is usually unnecessary.

The apparatus is made entirely of aluminum,[2] and consists of an oblique holder *h*, fixed on the cover of the centrifugal by means of a hinged sheet-metal flap *i*, which, filling up the space between the cone

1. E.P. 23920, 1905.

2. According to Deville, Wurtz, Hunt, Langley and Roscoe (Bull. de la Soc. Ind. de Rouen, 1891, 232) aluminum is entirely unaffected by nitric and sulphuric acids, and this is borne out by the author's experience.

of the drum and the casing of the same, dips almost entirely into the acid contained in the drum. By means of a spring rod *g*, which is connected by a joint to the support *e*, the flap *i*, which pendels round the upper horizontal edge, is pressed downward, but in such a manner, however, that it can come out somewhat above when pressed from below. In the drum itself is a horizontal tappet of flat aluminum fixed between the cone and the mantle.

Before commencing to feed the centrifugal, the steeping apparatus is fixed on the cover of the centrifugal by means of a pressure screw, and the drum then made to rotate slowly (24–30 revolutions per minute), and in such a direction that its contents move against the under surface of the flap *i*. The cotton or other substance is now thrown into the acid, in front of the apparatus, but not in very large quantities. The contents of the drum are made to partake of the movement by means of the tappet, so that when the cotton is thrown in, it also rotates. As soon as it comes to the oblique holder *h* and the flap *i* it is carried right through under both by the strength of the current of the acid, and is therefore thoroughly steeped in the same. The drum is fed until it contains a sufficient quantity of material, whereupon, by loosening the rod *g* from the flap, the whole steeping-arrangement can be taken off, and placed into a stoneware pot near the centrifugal, where it remains when not in use.[1]

Selwig & Lange have recently patented[2] an arrangement for feeding paper into the nitrating vessels. The apparatus consists of a vertical stem suspended from a traveling carriage, which can be adjusted over any of the nitrating vessels. At the lower end of the stem is situated a reel of paper, the paper from which passes over a guide roll and between a pair of drawing rolls also carried by the stem. The drawing rolls are operated by means of a belt driven by an electric motor mounted at the upper end of the vertical stem. An oscillatory motion may be imparted to the stem if desired.

1. According to their circular the Selwig & Lange's nitrating centrifugals are supplied in the following sizes:

No.	External Diameter of Drum.	Height of Drum.	Capacity		Charge of Cotton.	Revolutions per Minute.	H.P. Necessary	
			of Drum.	of Casing.			Starting.	Running.
1	39.4 inch. (1,000 mm)	15 inch. (380 mm)	56 gal. (260 l.)	77–88 gal. (375–400 l.)	22–26½ lb. (10–12 k.)	about 1,000	9–10	2–2.3
2	33.5 inch. (850 mm)	14.2 inch. (360 mm)	39 gal. (175 l.)	82 gal. (ca. 255 l.)	14½–17½ lb. (6.5–8 k.)	about 1,150	7–8	1.7–2

2. F.P. 409220, 1909.

In the acid circulation centrifugals of Selwig & Lange the same acid is re-pumped over the nitrated cotton. In order to eliminate decrease in strength of the mixed acids during the process, a method has been patented [1] where the acids are either partially or completely renewed, continuous circulation being employed. The nitrating acid thus remains of a definite composition throughout all stages of the conversion.

The Thomson Displacement Process of cotton nitration, devised by J. M. Thomson and W. T. Thomson, is designed for the nitration of cotton for a wide variety of uses. In England, where the process was perfected and first patented in 1903,[2] so-called "gun-

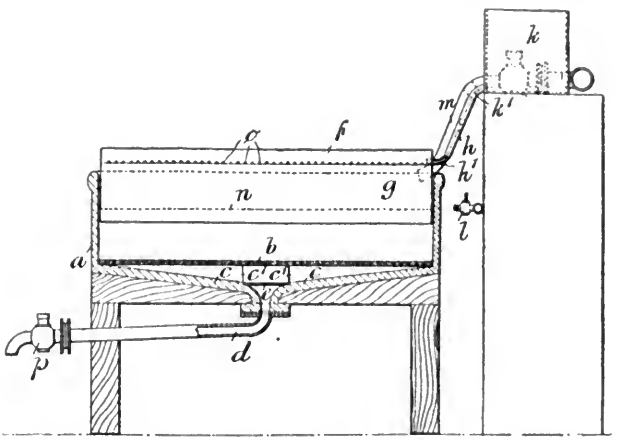

FIG. 10.—Thomson Displacement Apparatus for Cotton Nitration. (Sectional elevation.) *a*, tank; *b*, false bottom; *c'*, ribs; *d*, drainage outlet; *e*, grid; *f*, troughs; *g*, aprons; *h*, *h'*, pipe and branches to troughs *f*; *l*, water supply pipe; *m*, pipe leading from nitrating acids; *o*, perforations in trough; *p*, cock to remove spent acid.

cotton proper"—those cellulose nitrates of highest nitration and insoluble in ether-alcohol with nitrogen content of around 13.5%, and intended for blasting gelatin and torpedo work—having been used exclusively in England at Waltham Abbey since August, 1905. In the United States this process was first tried on an experimental scale in February, 1908, actual production being commenced some three weeks later, at the Government Picatinney Arsenal, Dover, N. J., Major Odus C. Horney, commanding, where it has been in operation continuously since, this being the only place in the United States, to the author's knowledge, where this process has been carried on.[3]

1. H. Diamanti, P. Loisif, and H. Champin, F.P. 377425, 1906.
2. E.P. 8278, 1903; F.P. 364981, 1906; no U.S.P. granted up to Jan. 1, 1911; abst. J.S.C.I., 1904, **23**, 560.
3. Through the courtesy of Major Horney, the commanding officer, the author

In the original specification of the inventors, the patent claims are based upon the discovery made by them, that the acid extraction and preliminary washing operations in cotton nitration may be combined by removing the acids from the nitrated cellulose directly by displacement without the employment of either pressure, vacuum or mechanical appliances, and at the same time securing the minimum dilution of the acids. They also observed that if water be carefully run on the surface of the acids in which the nitrocellulose is immersed and the acids slowly drawn off at the bottom of the vessel, the water displaces the acid from the interstices of the nitrocellulose with no undesirable rise in temperature, and with but little dilution of the nitrating acids. By this method the maximum acid is recovered in condition suitable for concentration and reuse, and the volume of water required for the preliminary washing materially reduced.

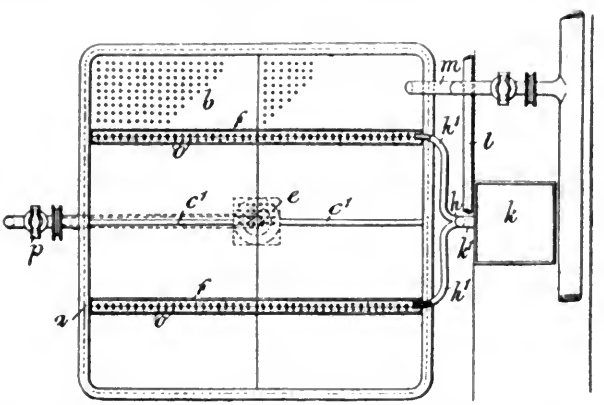

FIG. 11.—Thomson Displacement Apparatus for Cotton Nitration. *a*, tank; *b*, false bottom; *c'*, ribs; *e*, grid; *f*, troughs; *g*, aprons; *h* and *h'*, pipes to troughs; *m*, pipe to nitrating acids; *o*, perforations of troughs; *p*, cock for removal of acid.

This method has been adapted to the preparation of a pyrocollodion powder at the Picatinney Arsenal above referred to, with a nitrogen content of 12.5–12.7%, and practically complete solubility in ether-alcohol. At the present time seven units of four pans each are in daily operation,[1] each pan consisting of a cylindrical stoneware vessel (see Figs. 10, 11), constructed with a perforated stoneware

was permitted to see the process in operation, and from whom much of the data contained herein was obtained. The description of the English method is taken from an article by Lieut. Sir F. Nathan, J.S.C.I., 1909, 28, 181; C. N. 1909, 99, 136, 152, 159; see also "Arms and Explosives," 1906, 77.

1. Expansion in equipment in this process at Picatinney, now well under way, when completed will provide for an emergency production there of nine thousand pounds cellulose nitrate daily by this method.

FIG. 12.—The Thomson Displacement Process for Cotton Nitration, at Picatinny Arsenal, Dover, N. J.

The nitrating acid enters the pans *A*, from underneath, *B* being the one-piece perforated segmental plate placed on the bottom of each pan before the introduction of the cotton. A hood, shown faintly in the background is placed over each pan during introduction of the cotton into the nitrating acid, and by means of the flue *D*, the fumes from two pans are carried downward by suction and out of the building. A fan is located in the roof of the building which forces pure air through the apertures shown at *H*. The stream of water issues from the fourth inch rubber hose *F*, which is kept in position by means of a weight, such as a piece of lead *G*. The nitrated and washed cotton is shown at *E*. When the entire surface has been covered with a thin film of water, fuming ceases. After nitration has been completed, the spent acid is withdrawn and cold water run in so gradually that no dangerous rise in temperature takes place. A cross-section of a pan with strong and weak acid connections, hydrometer arrangement, etc., is shown in Major Horney's lecture on "Smokeless Powder Manufacture," Jour. U. S. Artil., 1910, **34**, (No. 105), p. 141.

false bottom which is removable, and under which is a cock at the lowest point for running off the liquid.[1] The nitrating acid at a temperature of 30–32°, and containing nitric acid 21–22%, sulphuric acid 63–64%, is run by gravity[2] into the pans, 700 lbs. in each.[3] The cotton—20 lb. charges for each pan—is brought into the nitrating house in sealed cans, with moisture content less than 1%, and at a temperature at least as high as the nitrating acid in which it is to be immersed.[4] The cotton is immersed in the acid in small portions at a time, the entire operation requiring about fifteen minutes. When the charge of cotton has been entirely immersed, the five-section perforated stoneware top plates are placed over the cotton, care being taken that all pieces of cotton are under the surface of the acid. A film of cold water[5] is then immediately flowed over the surface of the top plates to a depth of about one inch[6] in order to seal the nitrating acid and prevent fuming. The hoods which are placed over the pans during immersion of the cotton[7] are now removed, the cotton remaining soaking in the nitrating acid for periods varying from 1–2.5 hours, depending on the physical results desired in the nitrocotton. At the expiration of the time in which the nitration is considered completed,

1. Four pans are usually spoken of as a unit and are nitrated and emptied together. In nitrating such a unit the services of six men are required to immerse the cotton in the nitrating acid, one man to immerse the cotton for each pan, and one man for each two pans, who places the cotton onto the acid for the immersion by galvanized iron forks. A single-piece hood constructed of wood, but impregnated with paraffin oil and coated with a high congealing-point wax forms the hoods, each hood having an opening on opposite sides for the delivery of the cotton and for the submerging of it. The top of the hood, directly over the center of each pan, contains a window, over which is suspended an electric light to better light the interior of the pans during the preliminary immersion. Exhaust pipes are also provided for the withdrawal of fumes.

2. Various devices are in operation for heating the acid to the desired temperature before introduction of the cotton. In one method the acid circulates through pipes in a steam jacket or hot-water tank. Perhaps as simple and efficient as any is to encase the delivery pipe with a larger pipe containing steam connection, when by admitting steam at a given pressure, and running the nitrating acid through the inner tube at a determined volume, heating of the nitrating acid is practically automatic.

3. In J.S.C.I., 1909, **28**, 181, a charge of 600–650 lb. is recommended for the production of cellulose nitrate of highest nitration, a 29 lb. charge of cotton being used.

4. From five to ten minutes is required to run in the nitrating acid per pan, depending on the force of gravity and the diameter of the entering pipe.

5. A small stream for a fourth-inch ordinary gas tubing hose is sufficient.

6. Thomson in his original patent (l.c.) suggests the use of sulphuric acid for sealing where the higher nitrated cottons are being prepared. In some cases the method may be carried out in an ordinary centrifugal, using the latter to effect preliminary drying after acid extraction. This has the advantage over the usual method of working ordinary centrifugal nitrating apparatus, because the acid being removed from the centrifugal is so gradual that practically all danger of firing and "fuming" disappears, and a greater proportion of waste acid is recovered.

7. The hoods may be transported around the nitrating room by means of a traveling crane.

the cock leading to the waste pipe is gradually opened, the waste acid allowed to flow away from the nitrated cotton at the rate of about 17 lb. per minute, the volume of fluid in the pan being maintained by running cold water in on the top plates through the distributor. This displacement of acid by cold water is continued until the major portion of the acid has run out, the water following the acid through the nitrocotton with but little appreciable mixing, this displacement requiring about forty-five minutes.[1] The water in displacing the mixed acids does so so gradually that the temperature of the nitrating acid in the pans is not raised. The waste acid passes out of a 3-inch pipe by means of overflow into a larger pipe, and in this 3-inch pipe floats a hydrometer, whereby the concentration of the acid may be observed.[2] The cotton after the water has been allowed to drain away is shoveled into trucks, either with aluminum forks, or preferably with wooden shovels,[3] and wheeled to the wash house, the pans washed out and the operation repeated.[4]

1. The patentees found that the rate of displacement exerts a considerable influence on the properties of the resulting nitrated celluloses, and affords a means of regulating the temperature of displacement, the rate found suitable being about two inches per hour when treating highly nitrated celluloses. It is especially essential in this process that the water used be thoroughly filtered, for if the clarification of the water has been inefficient, when the top plates in the pans are removed at the close of the nitrating process, the nitrocotton immediately under the hose which supplied the water will be found in various stages of discoloration, or perhaps a dark precipitate deposited, the cotton acting like a filter to separate the solid particles. Although these particles (if present) are supposed to be removed in filtering the block of gelatinized cellulose nitrate through the "macaroni" hydraulic press, filtration of the water used in displacement through sand or sponge filters is always desirable.

2. There is more waste acid separated and reclaimed by this process than can be utilized for fortifying purposes indefinitely, the spent acid accumulating. In order, however, to obtain the desired amount of spent acid of maximum concentration, various methods have been tried to divide the waste acid into definite fractions. The specific gravity of the strongest acid as it leaves the pans and at the temperature (about 32°) is about 1.7. By now separating as the first fraction a volume of spent acid required to make up the next day's run of acid, using the strongest commercial acids obtainable, and for a second fraction, all that protion not required for strengthening, but yet sufficiently strong so as not to attack too strongly the transportation containers, seems to be the most economical solution of the problem of spent-acid recovery and utilization. It has been found that a spent acid of sp.gr. much under 1.4 attacks iron so readily as to be inadvisable for reshipment, and it is usually run into the sewer. The charge of nitrating acid for a pyrocollodion nitrocellulose usually consists of three portions: (1) The spent acid from previous nitration. (2) Sulphuric acid 98% absolute H_2SO_4 (which in winter has about 1% of nitric acid added to it to prevent freezing by the formation of monohydrate crystals) and (3) a mixture of nitric acid 52%, sulphuric acid 45%.

3. The so-called potato shovels, made entirely of wood.

4. In the Austrian method of cellulose nitrate manufacture (G. MacDonald, "Arms and Explosives," 1909, p. 38) raw cotton is immersed in an acid mixture forty-eight hours, then placed in running water four to eight weeks until free from acid. In the French method, cotton is immersed in an acid mixture for one hour and then dipped in running water for one hour. The remaining acid is subsequently neutralized by a solution of potassium carbonate.

This system of manufacture offers many advantages over other methods of cotton nitration, among which may be mentioned:

(1) The displacement process takes the place of the processes of dipping, digesting in pots, acid centrifugaling, immersing and hydro-extraction.

(2) The actual dipping of the cotton is a much less laborious operation—the heavy labor of squeezing out the acid is done away with, while the absence of fumes makes the work much less disagreeable and more healthful. Fuming by this process is almost unknown, and injuries to workmen from acid splashing very infrequent.

(3) Loss of nitrocotton due to decomposition in the digesting pots and acid centrifugals and consequent inconvenience and danger to workmen from nitrous fumes are done away with, and the heavy loss from breakage of pots and lids avoided. The experience of two and a half years at Picatinney and three and a half years at Waltham Abbey have shown that the earthenware pots are very lasting.

(4) The fumes incident to loading and unloading acid centrifugals and immersing are avoided.

(5) The quantity of acid lost is much reduced, and this reduction means less pollution of the discarded wash-waters.

(6) The recovered waste acid is much cleaner, a point of great importance from the point of view of revivification and concentration.

(7) The mechanical loss of nitrocotton in the acid and water centrifugaling processes and in the immersing processes is avoided.

(8) A more thorough preliminary washing is obtained with an expenditure of about one-fifth of the quantity of water, and less boiling, with consequent consumption of steam, is required in order to reach a given standard of purity.

(9) Great saving in power is gained by the abolition of the acid and water centrigufals, and in the reduction in the quantity of water which has to be pumped.

(10) Renewals of plant and repairs to plant and buildings are said to be exceedingly low.

(11) The number of hands employed for any given output is much less—the total cost of labor being reduced by two-thirds.

(12) The yield is improved. At Waltham Abbey it is given as 170% (probably theoretical). At Picatinney with a 12.6% nitrogen it is understood that the yield exceeds 155%.

(13) A more stable nitrocotton, of more uniform nitrogen content, is stated to be produced. It is also far cleaner and contains notably less mineral matter.

(14) According to G. Lunge [1] the loss of concentrated acid is only 14% of the weight of cellulose nitrate as compared with a loss of 150% by the older processes.

Sulphuric acid being by volume less expensive than mixed nitrating acid, A. T. Cocking takes advantage of this fact [2] in an attempt to reduce the cost of operating the displacement process. The pertinent points in his patent is to run in sulphuric acid containing about 2% nitric acid onto the nitrated cotton as soon as the nitrating acid has been drained off, no water being admitted. After the sulphuric acid has uniformly saturated the nitrated cotton, it is gradually replaced by water as in the original process, a larger volume of more concentrated spent acid being thereby obtained.

It has long been known that the air in the cotton filament canal offers a certain appreciable resistance to the penetration of the acid, and it has been reasoned that removal of that air from the individual fibers would result in a more uniform nitration and more stable ester. The mechanics of this reason has been embodied in a recent patent,[3] where the nitrating vessel is cylindrical in form and provided with an air-tight cover. Two acid reservoirs which can be either evacuated or placed under pressure are connected with the nitrating vessel. The pipe from one enters the bottom of the nitrating vessel, passes up the center, and delivers its acid at the bottom of the vessel just beneath a perforated false bottom. The cotton having been placed in the vessel, air is withdrawn from it by evacuating one of the acid reservoirs. The cock communicating with the other reservoir is then opened, the acid flows into the evacuated nitrating vessel, and allowed to continue when the cock is closed and the acid which has been in contact with the cellulose sucked off into the other reservoir. This process is alternately repeated, the advantages claimed being that a very much more uniform nitration of the cellulose is thus obtained.

Where it is desired to automatically transport the nitrated cotton from the centrifugals to the wash-house, the hydraulic guncotton conveyor of Selwig & Lange, as shown in Fig. 13, may be used. It is erected close to the nitrating centrifugal [4] and consists primarily of an aluminum or earthenware funnel 250 mm. wide, into which water enters through an opening below the upper rim in sufficient quantity

1. Z. ges. Schies-Sprengstoffw. **1**, 2–4.
2. E.P. 16676, 1906. The process of C. Claessen (D.R.P. 200292, 1906) is similar. In this, after the nitration is finished and the acid has been separated, sulphuric acid is injected into the rotation drum of a centrifuge containing the nitrated material, and the sulphuric acid subsequently displaced by water.
3. C. Crépelle-Fontaine, F.P. 397707, 1908.
4. U.S.P. 638647, 1899.

(400–500 l. per minute) and at regular pressure. The funnel is connected below by a siphon-shaped elbow-pipe to a slightly inclined pipe also 250 mm. wide, while to the top of the conveyor is fitted a fume hood from which the acid fumes are drawn by the exhauster.

After being squeezed out, the nitrated material is removed by means of tongs from the centrifugal to the conveyor, where it meets with a

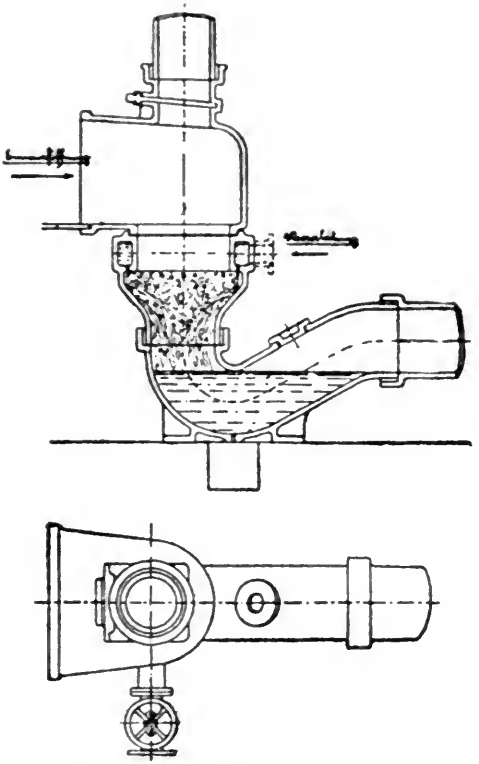

FIG. 13.—Selwig & Lange Guncotton Conveyor.

sufficient stream of water, which transports it through the conveyor pipes in any desired direction.

Generally each conveyor pipe discharges into a tank with perforated false bottom for the collection and preliminary washing of the nitrated material, otherwise the conveyor pipes from several apparatuses may be all connected with one outflow pipe and discharge into a common receptacle.

The guncotton conveyor, in addition to being used for the hydraulic transportation of nitrated material wrung out of the acid centrifugal,

may also be used for the transportation of material which has already undergone preliminary washing.

Nitration of Paper. The nitrating apparatus of R. Schüpphaus and M. White, G. Mowbray, Tribouillet and de Besancle and Hyatt, were all designed for the nitration of tissue paper. It has repeatedly been asserted that the finest quality of lacquer and bronzing liquids, transparent plastics and pyroxylin for the preparation of cinematographic and other continuous films, can be obtained only by the nitration of tissue paper. It is a fact that the lightest colored lacquers, the so-called " water-white " grade, are to-day produced in the United States from nitrated tissue paper (so-called paproxyl) in preference to the higher grades of cotton. The actual advantages observed are ease in nitration and speed of penetration, the paper being seldom thicker than 0.003 inch; facility of solution of the nitrated paper; entire absence of cloudiness of the filtered solutions; and the near approach (tintometrically) to forming colorless solutions. It has been pointed out in several works and scientific articles that the high cost of tissue paper must of necessity preclude its use in any large quantities for this purpose, but all, so far as the author is aware, of the manufacturers of pyroxylin plastics in the United States, either manufacture or use large quantities of nitrated tissue paper. When the relative cost of a high grade of cotton is calculated as compared with tissue paper at the present day, it is evident that the difference in cost of raw material is not so marked. The ease and completeness with which solid particles may be removed from nitrated paper solutions of is great importance in the use of this material for continuous photographic films, where freedom from specks is absolutely necessary on account of the high magnification to which the film is subjected when thrown upon the screen.

In the manufacture of a suitable paper for this purpose, the Diamond Paper Mills and other manufacturers are obliged to exercise great care in locating their plants, to insure that the water supply is soft and practically free from organic matter, so that the paper may absorb little or no color from percolation through leaf mold and other decaying vegetable matter.

Of the less important processes, that of R. Schüpphaus and M. White [1] (Figs. 14, 15) consists of a cage *B*, with a central perforated cylinder, intended to insure the rapid and efficient saturation of the tissue paper used for nitration. The patentees claim that with their apparatus no stirring is required, which could only be true with nitration at low temperatures, and not with a temperature of 50–60°. Their

1. U.S.P. 406597, 418237, 1889.

method consists in nitrating the paper in the cage *B*, the bottom of which is formed by the flanged plate *c* fastened to the bottom of the

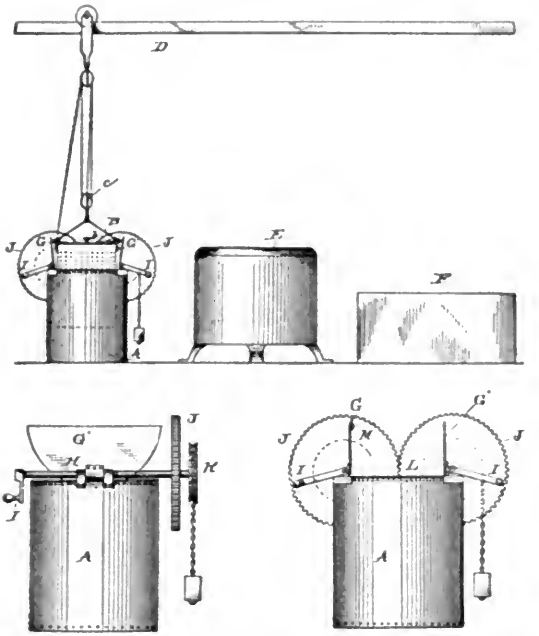

Fig. 14.—Schüpphaus & White Method of Paper Nitration.

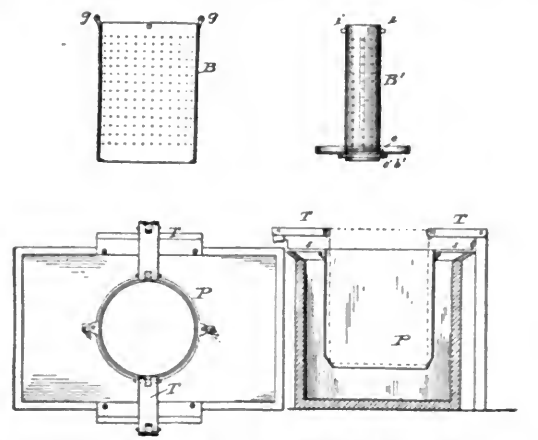

Fig. 15.—Schüpphaus & White Method of Paper Ntiration.

internal cylinder *B'*. After nitration the cage goes to the wringer *E*, Fig. 14, of which it forms the basket, the acids then being removed. The cage is next taken to the plunge tank *F*, where the paper is

removed by simply pulling out the central perforated cylinder *B'*. The lower cut shows the nitrating pot with automatic cover, the plunge tank *F* being shown in section and plan.

The method of G. M. Mowbray,[1] now chiefly of historical interest, is perhaps the most elaborate process of tissue-paper nitration which has gone beyond the experimental stage, no paper being nitrated by this method at the present day. The paper lengths shown in the various sectional drawings (Figs. 16 and 17), are entirely imaginary, as

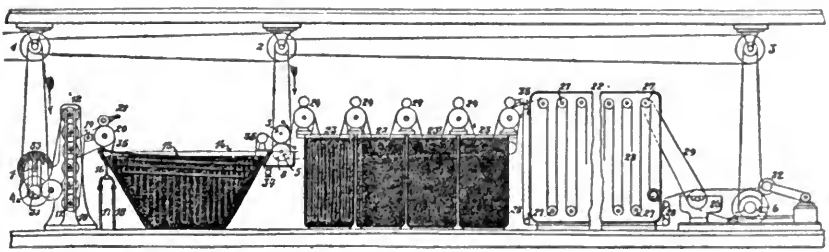

FIG. 16.—Mowbray's Paper Nitrating Apparatus.

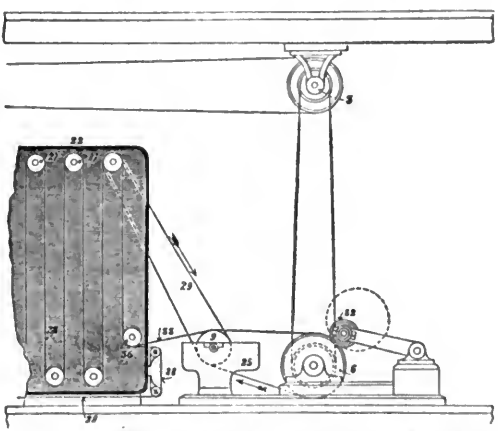

FIG. 17.—Mowbray's Paper Nitrating Apparatus.

the paper upon entering the nitrating fluid would immediately fall to the bottom of the receptacle. He allows the paper web to remain in the acid tank for twelve to twenty minutes, then as the first portion is drawn forward a fresh section takes its place. How to maintain the temperature and strength of acid in the nitrating tank is not stated and is one of the important problems. This method was tried

1. U.S.P. 350497, 350498, 1886; 434287, 443105, 1890; J. France has described methods of using cotton cut so fine as to be practically dust, for the preparation of soluble (U.S.P. 420445, 1890) and insoluble (U.S.P. 420446, 1890) nitrocellulose.

commercially at the plant of the American Zylonite Company, at North Adams, Mass., but was shortly after abandoned.

The paper nitrating apparatus of V. Tribouillet and A. de Besancle [1] consists of a receptacle shown in Fig. 18, comprising a nitrating box with hood. The paper or cotton to be nitrated is first dried at 100°, and either ground or disintegrated, the latter operation being performed in the vessel *A* (Fig. 18), which is 7–8 in. deep and mounted on a bottom-cooling jacket *B*, traversed by a stream of water. To protect the operator from fumes each unit is surrounded by a glass cover *V*, which at least must be unhandy. The nitrating acid consisting of 3 parts sulphuric (sp.gr. 1.834) and 2 parts concentrated nitric containing nitrous acid in solution is used at a temperature of 40–60°. A high yield has been claimed. Claessen [2] describes a method of producing an alcohol-soluble cellulose nitrate, especially suitable for celluloid manufacture, and prepared by acting upon 100 gm. cotton with 3 k. nitrosulphuric acid at 40–50°. The nitrating mixture containing 19% water (limit 18–20%), 42% sulphuric acid (limit 35–46%) and 39% nitric acid (limit 35–45%) is allowed to act for two hours, the temperature not being allowed to rise above 50°. After nitration, washing with cold water is followed by treatment with weak soda solution, then with water again and finally dried. The product contains 9.5–10.5% *N*, and is said to be readily soluble in 96% alcohol. In polarized light the fibers appear greenish-yellow. To prepare celluloid it is recommended to combine 100 k. of the above cellulose nitrate with colophony 30 k. and 60 k. of 96% alcohol. Instead of colophony, ceresin which gelatinizes in 96% alcohol may be used.

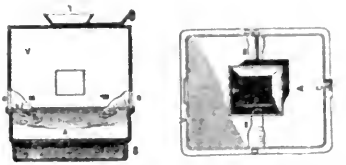

FIG. 18.—The Tribouillet & Besancle Nitrating Apparatus.

Hyatt's Paper Nitration Process. The foregoing described methods have been superseded, at least in the United States, by the process of John W. Hyatt, which although now over thirty years old, is used to-day in essentially the same manner as first brought out by the inventor. With the exception of unimportant modifications and modern refinements in the way of increasing the yield and greater percentage of acid recovery, the process stands to-day alone for the commercial preparation of nitrated tissue paper. So far as the author is aware, the manufacturers of pyroxylin plastics in the United States

1. U.S.P. 216474, 1879; E.P. 5057, 1878; D.R.P. 6828, 1879.
2. D.R.P. 163668, 1904.

at the present time use or produce nitrated paper by methods based upon this process of Hyatt.[1] The process is divided into the four steps of "disintegration," "conversion," "desiccation," and "ablution." This method, upon which tissue paper nitration is at present carried out, is considered of sufficient importance to give in detail, in substantially the words of the inventor:

The first step of the process has for its object the preparation of vegetable fiber for rapid conversion into nitrocellulose, and to this end the improvement consists in taking paper (unsized and uncalendered tissue-paper is best) which has been made in sheets, and, preferably, paper made from stock which has been bleached by any of the ordinary processes, and reducing this paper to small flakes; and this is done in practice by taking a roll of such paper, mounting it in frame, and feeding it between rollers and under tension to a cylinder armed with hook-teeth, set close together, which tear the sheet of paper into exceedingly minute shreds or particles ("flakes"), presenting almost as much edge as surface, so that when immersed in the acids they are acted upon almost instantaneously throughout, and converted more uniformly than would otherwise be practicable. This first step of the process is designated "disintegration," to express the reduction of the tissue paper into minute flakes.

To expedite the converting action still further, the second stage consists in preparing the acid bath, which is placed under a shaft carrying on its lower end a stirrer, and rapidly rotating the shaft, so that the stirrer will give the bath a swift swirling motion; and by setting the blades of the stirrer at an angle somewhat similarly to the blades of a propeller, the centrifugal motion of the acids is increased, crowding them up at the side of the vessel and leaving a depression at the center, so that the flakes of paper being fed into the bath are first swept into the vortex of the swirl by centripetal force, and there subjected to the intensified action of the bath, and as the increasing mass of flakes is saturated and immersed it is gradually swept from the center to the side of the vessel, where its motion is slower, leaving the center free for the reception of the fresh flakes, which are constantly fed into the vortex, where they are acted upon on all sides instantaneously. In this way the treatment of a much larger quantity of the paper is effected than the bath would otherwise act upon effectively. This second step of the process is designated "conversion," to express the transition of the disintegrated flakes from their normal condition into that of saturated soluble fiber.

The quantity of flakes which can be properly fed into the bath,

1. U.S.P. 210611, 1878.

and properly acted upon, as described, having been thoroughly converted, the workman raises the stirrer out of the vessel, which has been resting upon a turntable, and brings under the stirrer another vessel, which meanwhile has been supplied with acids pumped up through pipes, arranged in proper relative position to have the vessel brought under them by the rotation of the turntable. He then lowers the stirrer into this freshly charged vessel, sets it in motion, and feeds in fresh flakes, as before and, when they are converted, again raising the stirrer, passes the vessel onward by the turntable.

The next stage of the process is the separation and recovery of the surplus acid from the saturated soluble fiber, and this is effected as follows: close to the turntable and near to the acid-supply pipes a centrifugal machine is placed, provided with a second perforated rotating removable basket, fitting loosely within the ordinary perforated basket, which latter is mounted upon a vertical shaft, carrying a driving pulley upon its lower end. The acids pass through the perforations in the baskets into the space between the outer basket and the casing, and off through a pipe leading from the bottom of this casing to the reservoir below, from which they may be again pumped up through the supply pipes.

The turntable having brought the vessel containing the acid and converted fiber opposite the centrifugal machine, the vessel is lifted and its contents emptied into the centrifuge which, rotating rapidly, throws out the surplus acid, as is well understood. This third stage is designated "desiccation," to indicate the removal of the surplus acid.

The next stage is to wash out the acids left in the desiccated fiber after the operation of the whizzer; and to this end a washing vat is arranged, supplied with water, and having an overflow near the top, and an inclined table extending from the whizzer to the edge of the vat, so that by lifting the removable basket out of the whizzer with suitable lifting-hooks the desiccated fiber is dumped on the table and slides down into the washing-vat, where it is stirred and thoroughly washed in the constantly changing water until the acids are thoroughly removed. This fourth stage is designated "ablution," to express the transition of the nitrocellulose from the condition of desiccation to the condition of hydrated soluble fiber. From this vat the hydrated soluble fiber may be transferred to another whizzer, which will remove the surplus water, or to a beating-engine, and ground into pulp.

A hood or canopy is provided extending over the entire apparatus, and having an induced upward draft through it, whereby the fumes

from the acids are not only prevented from becoming diffused throughout the room, but are so rapidly carried off through the hood as to greatly relieve the workmen immediately about the apparatus from the distress incident to the use of such acids in open vessels.

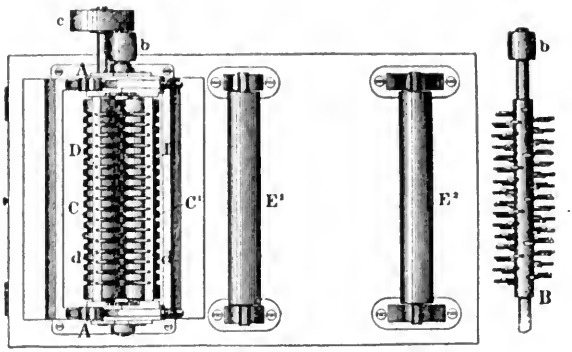

FIG. 19.—Hyatt Tissue-paper Nitrator. Top view of disintegrating apparatus.

The converting vessels are also provided with lugs above and below the center of gravity, and rig-lifting apparatus at the proper points for elevating and tilting the converting vessels to empty them into the whizzer; and by the use of these devices and of a suitable lifting-

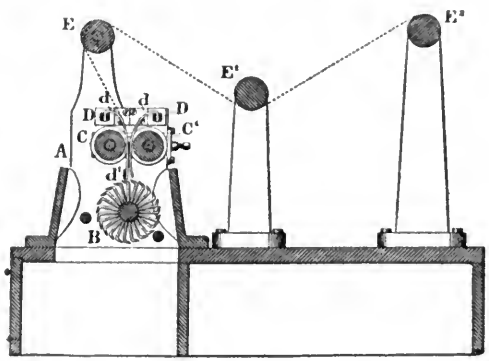

FIG. 20.—Hyatt Tissue-paper Nitrator. Vertical longitudinal section through Fig. 19.

hook for raising the removable basket from the whizzer, the process is conducted with very little occasion to touch the vessels with the hands.

In the drawings (Fig. 19) is a plan or top view of the disintegrating apparatus; Fig. 20, a vertical longitudinal section through the same; Fig. 21, a plan view, showing the general arrangement of the con-

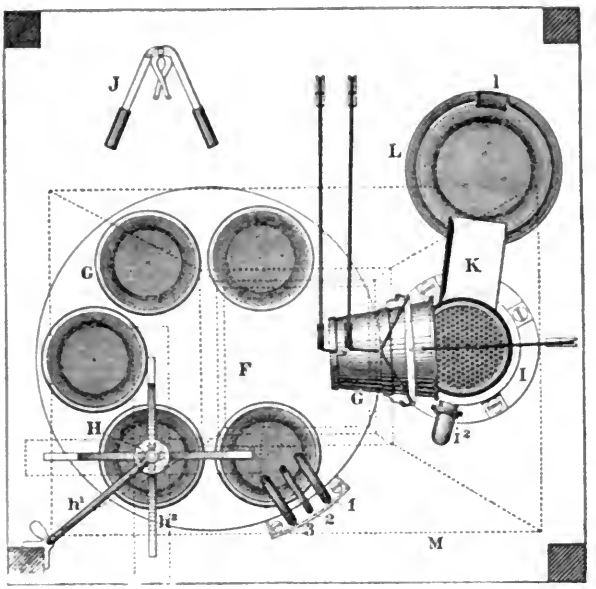

FIG. 21.—Hyatt Tissue-paper Nitrating Apparatus. Plan view showing converters

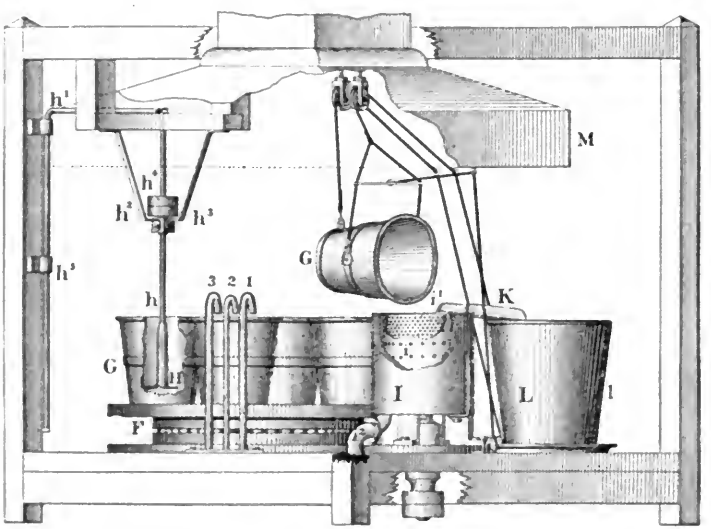

FIG. 22.—Hyatt Tissue-paper Nitrator. Side view of Fig. 21.

verting apparatus; and Fig. 22, a side view, in elevation, of the same.[1]

1. The disentegrating apparatus consists of a frame supporting a pair of housings *A*, with bearings below for the shaft of the disintegrator *B*, and bearings in adjustable boxes above for the grooved feed-rollers *CC'*, a driving-pulley, *c*, being mounted on the projecting end of the shaft of the feed-roller *C*, which roller rotates the feed-roller C_1 by frictional contact. The housings also support a transverse frame, *D*, in which guide-teeth *d*, of wire, are so arranged that each of them shall take into one of the grooves of the feed-rollers.

The guide-teeth, which fit in the grooves of the roller *C*, extend down below the feed-rollers, and are secured to and support the guide-bar *d'*, parallel with the roller and immediately above the teeth of the disintegrator, in line with the line of contact of the feed-rolls.

The teeth which fit in the grooves of the roller *C'* are slightly curved at their lower ends, so as to turn away from the bar *d'*, and the lower points of these teeth are about in line with the lower edge of the guide-bar.

As the feed-rollers are rotated the paper is carried down between them and between the teeth, is such a manner that while the teeth in the roller *C'* permit the paper after it passes below them to turn toward the knives, the guide bar *d'* sustains it against the action of the knives and holds it smooth throughout its entire width, so that it is uniformly fed under the tension of the rollers and presented to and acted upon by the teeth of the disintegrator and reduced to substantially uniform flakes, instead of being irregularly torn and wadded.

The disintegrator *B* consists of a number of hook-teeth or knives arranged close together in spiral lines around and upon its shaft. The elements which will determine the size of the flakes are a given number of teeth and a given rate of speed in the disintegrator, and a relatively slower rate of speed in the feed rollers; but it was not found desirable to reduce the paper to flakes of less size than, say, one-sixteenth of an inch.

The revolution of the disintegrator is in a direction opposite to that of the driven feed roller, and is imparted by a pulley, *b*, on the projecting end of the disintegrator shaft.

The paper is supplied to the disintegrator from a roller E^2, and passes under a roller E^1, and over a roller *E*, down to and between the feed rollers CC^1. (See the dotted line in Fig. 20.)

The flakes fall into a receptacle below the disintegrator, from which they are removed as required.

The converting apparatus is arranged as shown in Figs. 21 and 22, and comprises first, a turntable *F*, mounted on spherical balls or other suitable suspension, and having such diameter as will accommodate a series of the converting vessels *G*. At a proper point supply pipes 1, 2, 3, leading from the acid reservoirs below, have their spouts curved over, so that one of the vessels *G*, standing upon the turntable, may, by the rotation of the table, be brought under the spouts and charged with acids by the action of a pump. The further rotation of the turntable then moves the charged vessel from the spouts around underneath the stirrer *H*, which is supported above the turntable, so that the charged vessel on the turntable will stand under it centrally. This stirrer is composed of a series of short blades, set or bent at a slight inclination to their shaft, so that they will induce a swirling motion in the acid bath, and attached to the lower end of a vertical shaft *h*, which can be raised high enough above the turntable for the vessel to be placed under or removed from beneath it, and lowered so as to rotate in the vessel near the bottom. This raising and lowering of the stirrer is effected through a bent rod h^1, connected with the upper end of the shaft *h*. The shaft *h* of the stirrer passes through a depending bracket h^2, and is provided with a loose pulley and a fast pulley h^3 h^4, through which, when the stirrer is lowered so that the pulleys are brought together, the stirrer is rotated by a belt, the motion being stopped, however, when the shaft is raised and the fast pulley h^4 removed from the action of the belt. A pin passing through the rod h^1 and resting upon a bracket, h^5, sustains the stirrer when raised. It will of course be understood that the blades of the stirrer and so much of its shaft as is liable to be reached by the acids should be made of or covered with copper or other metal or composition which will resist the corrosive action of the acids, and

It has been said that when Hyatt utilized the relation of camphor to pyroxylin he laid the foundation for an art, and when he devised a satisfactory process of paper nitration whereby transparent objects hitherto unattainable could be produced in large quantities and including the imitations of ivory, mosaics, coral, and amber, he laid the foundation for a "fine" art. It is understood that the proportions of nitrating acids found satisfactory by Hyatt is in the ratio of 50 cc. nitric (sp.gr. 1.47), 100 cc. nitric (sp.gr. 1.36), 100 cc. sulphuric (sp.gr. 1.84) and 18 gm. finely shredded tissue paper, immersed at a temperature of 55° for one-half to one hour, the paper increasing in weight by about 40% during the nitration. The size of the individual pieces is a

the same precaution should be observed in protecting all the surfaces of the apparatus liable to be attacked and impaired by the acids.

The stirrer being lowered into the charged vessel *G* and set in motion, and the acids having been brought to the proper swirl, the flakes of the disintegrated paper are fed into the vessel at or near the center or vortex of the swirl, and subjected to the action of the bath, this stirring operation being continued until, by the action of the acids, the flakes have been thoroughly converted into nitrocellulose. The flakes fed into the center or vortex are, by the operation of the stirrer blades, thrown outward toward the side of the vessel, and their place is supplied by fresh flakes fed in at the center until the thickness of the mass indicates the limit of the saturating capacity of the bath, when the shaft of the stirrer is raised and the turntable rotated, carrying the vessel from underneath the stirrer round opposite a whizzer or centrifugal machine, consisting of the case *I*, firmly secured in position, the perforated rotating basket *i*, mounted upon the upper end of the vertical shaft, by which it is rotated through a pulley on the lower end of the shaft (see Fig. 22), and the removable perforated rotating basket i^1, fitting loosely within the basket *i*.

To transfer the converted flakes from the vessel *G*, a tackle is rigged between the turntable and the whizzer, with three hooks, two on one rope, to take into the lugs or eyes on the sides of the vessel, and thereby lift the vessel, and one on the other rope, which takes into the lug or eye near the bottom of the vessel to tilt it when raised; and on the opposite side of the whizzer a line is provided, running through the eye to the lifting tackle, so as to draw the raised vessel into proper position to be tilted and emptied into the removable basket of the whizzer. (See Figs. 21 and 22.) The whizzer meanwhile having been duly set in motion, the surplus acid is rapidly expelled from the converted flakes, and passes down between the outer basket *i*, and the case of the whizzer to a pipe i^2, which conducts it to the cistern or reservoir, from which it may be again pumped up through the supply pipes 1, 2, 3. When the action of the whizzer is completed and the converted flakes freed from the surplus acid, the removable basket i^1 is lifted out by means of a pair of internal lifting hooks, *J*, 4, and its contents dumped upon the inclined table *K* and into the washing vat *L*, which is supplied with water, and the converted flakes are stirred and washed therein, under a constant circulation of water, supplied in any suitable manner and passing off through the overflow *l*, near the top of the vat. From this vat the washed mass is removed for further treatment not pertaining to this process, which is concluded with this condition of the hydrated soluble fiber.

It will be observed that the diameter of the turntable is such as to allow space for a series of the converting vessels *G*, the relative position of which is such that while one is in readiness to be lifted and its contents dumped into the vessel, another is being charged with acid, and a third is beneath the stirrer, while between the one under the stirrer and the one at the whizzer there is room for several others, so that there may be always a series of vessels that have passed the stirrer, ready for being dumped into the whizzer and passed again under the supply pipes, and the operation may be thus carried on without any intervals between the stages.

matter of adjustment of the shredding machine, that produced to-day being about ½ to 1 in.[1] Ash determinations made by the author on this paper gave results of 0.08–0.12%. J. W. Swan[2] has devised a method of producing cellulose nitrate in a continuous manner by passing cellulose, in the form of a long web, band or sheet of paper, continuously through the mixed acids at such a rate as to allow of sufficient nitration of the cellulose.

Nitration of Cotton for Cheaper Grade of Pyroxylin. For uses in combination with oils and pigments, in opaque products, especially in pyroxylin coating compositions, where the solubility, viscosity, and freedom from insoluble particles is of no great moment, a grade of cellulose nitrate is made by means of centrifugals, which is used in enormous quantities. The following is the process in its essentials:

The acid mixture consists of sulphuric acid 55%, nitric acid 17%, water 28%, total acidity 72%. The initial temperature of the nitrating acid is 46–48°,[3] time of nitration fifteen minutes, and five wringers nitrated each two hours. The heat of reaction raises the centrifuge contents to 54–57°. Yield 128–135% on the weight of the dry cotton. Nitrogen content 12.35–12.40%, nitrating mixture 50 times the weight of the cotton. The product is nearly soluble in commercial wood alcohol, contains considerable residue, has a thin flow, and dissolves very readily. The stability is often low. As the temperature of nitration increases, the cost increases correspondingly, for the hotter nitrating acid means a more fluid pyroxylin, more loss in washing and neutralizing, more frequent replacement of rubber gloves, etc., and greater frequency of the batches fuming in the wringer. The value of this grade of pyroxylin lies in the small amount of solvent necessary to make a workable solution, and this is of especial value in the imitation leather industries, where the solvent is not recovered. Raising the sulphuric acid in the mixture lowers the nitrogen content of the pyroxylin; raising the nitric acid increases the percentage of nitrogen in the nitrocotton. Elevation of temperature without changing the compositions of the nitrating mixture has but little effect on the nitrogen content, although the yield may be diminished.

Pyroxylinum. Under this general name a cellulose nitrate soluble in alcohol and ether is official in the Pharmacopœias of Belgium, Brit-

1. Analyses made by the author of that grade of paper pyroxylin most suitable for lacquers gave nitrogen 11.0–11.2%, ash 1.0%, KI starch test at 65°, about 15 minutes; temperature of ignition 170–175°.

2. E.P. 21729, 1894; abst. J.S.C.I., 1895, **14**, 1062.

3. The temperature of the acid upon coming in contact with the cotton. It has to be heated higher to allow for cooling during transmission of the acid to the centrifuge.

ain, Finland, Galicia, Germany, Greece, Helvetia, Italy, Netherlands, Portugal, Russia, Spain, Switzerland, and the United States. Except Belgium, all the prominent Pharmacopœias give under the word "Collodium" methods for the preparation of this form of cellulose nitrate, as will be noted from the following table:

Formula.	Brit.	Fin., Ger., Spain, Italy, Neth.	Gal.	Russ.	Swiss.	U. S.
Nitric acid.	50 cc.	400 gm.	500 gm.	8 gm.	9 gm.	1,400 cc.
Sulphuric acid.	50 cc.	1,000 gm.	1,000 gm.	20 gm.	18 gm.	2,200 cc.
Cool the mixture to		20° Ger. 20–25° F. Helv. cold, Italy.	30° F.	20° F.	15–20° F.	32° F.
Weight of cotton.	10 gm.	55 gm. dried at 100° (Italy).	55 gm. dried at 100°.	1 gm.	1 gm.	100 gm.
Macerate in nitrating acid	3 min.	24 hours at 15–20°.	24, 36, or 48 hours at a temp. of 35°, 25°, 15°.	24 hours at 15°.	15–24 hours.	Until sol. in ether-alcohol.
Dry.	Over water-bath.	In the air or not over 25°. Not over 80° (Neth.)	In free air.	at 25°.	At gentle heat.	Not above 60°.

The Greece, Spain and Portugal Pharmacopœal methods direct to stir 20 parts of potassium nitrate to a uniform paste with 30 parts sulphuric acid, sp.gr. 1.84, and put in at 30° (Spain), 1 part dry cotton, allowing the acid to act upon the cotton for five minutes (Greece), ten minutes (Portugal), or twenty-four hours at 20–30° (Spain), then wash out the acids and salts with boiling water (Spain), until all the acids and sulphates (Spain) have been removed, when the nitrated cotton is dried in the air. In another method, 29 parts sodium nitrate is mixed with 66 parts sulphuric acid, sp.gr. 1.84, 2 parts of cotton immersed and allowed to remain in the nitrating mixture for 8 days, after which it is washed to neutrality and dried.

Irrespective of the method of formation, the finished ester must be neutral, dissolve completely in ether containing ethyl alcohol with but little residuum, and leave practically no ash upon ignition.

Pyroxylins of Low Nitrogen Content. Much experimental work has been recorded in endeavors to reduce both the cost and inflammability of cellulose nitrate products by introducing the minimum amount of nitric acid into the cellulose molecule which will at the same time produce esters of physical properties commercially valuable. Knecht[1] has described unstable cellulose nitrates prepared by treating cellulose with nitric acid of varying strengths (sp.gr. 1.1–1.415), the neutralized products containing 3.0–35.8% nitric acid in combina-

1. Ber., 1904, **37**, 549; abst. J.S.C.I., 1904, **23**, 335.

tion, equivalent to 0.7–8.0% nitrogen.[1] A. Voigt[2] obtained gelatinous products by combining both the nitrating and pulverizing processes in one. He immersed cotton in 97 parts conc. sulphuric acid and 3 parts nitric acid at 2–3°[3] and obtained after neutralization and drying a very fine powder of high stability, which the patentee considers very advantageous for the manufacture of shooting and blasting powders and of lacquers. No statements of solubility, however, are given.

In 1908 B. Herstein[4] patented methods of formation of structureless nitro derivatives of cellulose, insoluble in alcohol, ether, amyl acetate and acetone; containing less than 4.5% nitrogen, and which are transformed into a transparent or translucent mass by the addition of caustic soda. The cellulose in the form of thin paper or cotton is immersed in an acid mixture consisting of about 63% by weight of absolute sulphuric acid, about 10% nitric acid, and the remaining 27% partly water and partly other inert material. This mixture may conveniently be obtained by adding to 85 parts by volume of sulphuric acid 1.66 sp.gr., 15 parts nitric acid by volume of 1.42 sp.gr. As soon as the cellulose is immersed, visible reaction takes place, the entire mass of cellulose loses its structural form, and is converted into a gelatinous transparent magma. It is essential that the acids be cooled to a low temperature (below 20°), in order that the cellulose may not dissolve in the acid mixture, and to insure that it becomes gelatinized merely. After a few minutes' immersion the excess of acid is poured off and the residue repeatedly washed with large quantities of cold water, pressed, and dried at a low temperature. The actual percentage of nitrogen varies materially with the method of manufacture, but is seldom over 4%. The most characteristic reaction of the product is its deportment when brought in contact with caustic alkali solutions, in which it quickly gelatinizes, forming a plastic, transparent mass, readily moldable, and which may be diluted with water and forced through fine orifices. It is readily hardened or coagulated by treatment with weak acids, and combines with phenol, resorcinol, or pyrogallol, the latter property differentiating it from

1. None were entirely gelatinized products, and no statement of their solubilities is given.

2. U.S.P. 855869, 860776, 1907; E.P. 5126, 1904; abst. J.S.C.I., 1907, **26**, 780.

3. The scoured and cleaned cotton cellulose is immersed in conc. sulphuric acid at 2–3°, in the ratio of 5 times by weight of acid to cellulose. The fibers rapidly disintegrate with a rise in temperature. After the structure has been destroyed, about 2 k. conc. nitric acid is added, the temperature of the mixture being kept down by artificial means. After two to three hours the mass congeals into a solid cake which is washed out in large quantities of water and dried. Thus prepared the product is a fine powder.

4. U.S.P. 879871, 1908; abst. J.S.C.I., 1908, **27**, 353.

true cellulose nitrates. Drs. Jasper E. Crane and C. Joyce[1] have elaborated upon this process and investigated the formula of the derivatives produced and the mechanics of the several reactions. In their preferred method paper cut in small pieces is immersed in a mixture of 65.5% sulphuric acid, 9% nitric acid, and 25.5% water, the ratio of acid to cellulose being at least 100 to 1. The temperature of the bath is kept at 5–10° and 6–12 minutes the preferred period of immersion.[2] After nitration the mass is immediately plunged into cold water, and the lumps or "curds" obtained rapidly washed until neutral. Combustions of the product previously dried *in vacuo* at 50° to constant weight gave results corresponding to a mono-nitrate on a C_{12} molecule for cellulose, the yield being about 110%, against 119% theoretical for a mono-nitrate, thus showing considerable loss by solution in the acid.[3] It was found to dissolve in strong acids, strong bases (including trimethylamine), pyrogallol, Schweitzer's reagent, and zinc chloride solutions. The anhydrous product was insoluble in acetic anhydride, but upon the addition of a small amount of water, acetation ensued and a product readily soluble in acetone but incompletely in chloroform resulted.[4] It is evident that these lower cellulose nitrates have valuable possibilities.

Other Later Processes. Gaston C. de Brialles of Paris[5] has patented in various countries a process of nitration by means of acids concentrated by electricity. It consists in inserting two platinum poles into the lower portion of a closed vessel in which the cellulose is confined, to make the acid more concentrated by electrolysis, the current being 3–4 volts. The anode is larger than the cathode, both being made of platinum. If the temperature is not below 30° the cellulose is nitrated in three to four hours. It is claimed that the electrolytic decomposition of the water formed in the reaction prevents the liberation of heat which would accompany the dilution

1. J.S.C.I., 1910, **29**, 540–542, with bibliography of 18 citations.

2. Decrease in temperature or time lowered the gelatinizing action on the cellulose. Increase in temperature gave buttery products, partially miscible with water and indicating a breakdown of the cellulose aggregate.

3. The sulphur was determined by the method of Hake and Lewis (J.S.C.I., 1905, **24**, 376), and nitrogen by the Dumas method in preference to the Lunge nitrometer, the latter giving incorrect and lower results, a proof that the nitrogen is present in the form of nitrate-nitrogen.

4. It contained 2.32% N., indicating it was a completely acetylated derivative of the formula $C_{22}H_{31}O_{18}N$, similar to the aceto-nitrates described by Berl and Smith (Ber., 1907, **40**, 903; abst. J.S.C.I., 1907, **26**, 273), and prepared by them from cellulose nitrates of higher nitrogen content. Their increased reactivity with iodine, Fehling's solution and fixation of basic dyes showed the product to contain cellulose hydrates. In this connection see Ost and Westhoff (Chem. Zeit., 1909, **33**, 197; abst. J.S.C.I., 1909, **28**, 325), and C. Schwalbe (Z. ang. Chem., 1909, **22**, 197; abst. J.S.C.I., 1909, **28**, 216).

5. E.P. 2902, 1906; D.R.P. 203377, 1906; F.P. 364349, 1906.

of the acid.[1] The method in use at the Stains Company plant in Paris is stated to consist in immersing small strips of fine tissue paper for a long time in conc. nitric acid, after which a small quantity of conc. sulphuric acid is added, and the product washed to neutrality. A. Luck and A. Durnford[2] first change the cellulose into hydrocellulose before nitration. E. Quinan[3] immerses the cellulose in hot nitric acid to dissolve out all mineral constituents, then transfers to a nitrating bath of nitric and sulphuric acid to complete the esterification.

Washing. The first operation of eliminating the acid after centrifugalization is washing. This is done in a large wooden tank filled with cold water, which should previously have been run through a sand or other suitable filter. By means of overflow plugs, a continuous stream of water may be allowed to fall over the nitrocotton while the latter is kept in constant motion by means of manual stirring with wooden paddles. After the cotton has been so thoroughly washed that a small piece tastes but faintly acid, the water is allowed to run off through a false bottom, and wrung out in a centrifugal machine, or the last wash water may be allowed to remain in contact with the nitrocotton for several hours in order to wash the acid out from the central canal of the cotton filament. Often the process is so arranged that the nitrocotton is allowed to soak in the last water over night.[4]

It has been stated that the higher the ratio of sulphuric acid to nitric acid in the nitrating acids, the longer the time necessary and the greater the number of changes of water required, before the water from the boiling vat is free from acid reaction. It appears that the lower nitrated cottons are more readily washed free from acid than those of higher nitration. It is pretty well understood that the neutralization of free acids in nitrocotton with ammonia, as in the pat-

1. See also H. Diamanti, H. Champin, P. Loisef, F.P. 377425, 379509, 1906; J.S.C.I., 1907, 26, 1066.
2. E.P. 4760, 1895.
3. D.R.P. 117349, 1898.
4. F. I. DuPont (U.S.P. 724932, 1903; 762757, 1904) has devised a process of purification in which it is intended to more quickly and completely remove the acid from the canals of the nitrocotton by means of compressed air. The material is agitated in water under great air pressure, the pressure suddenly removed, whereby the impurities are more readily washed out. The apparatus is a cylinder with conical bottom, and with pipe and pump connecting the top and bottom to produce violent circulation. An inert gas may be introduced in such a manner as to pass through the nitrocotton. In his U.S.P. 648147, 1900, the idea of dehydration by solvent displacement (F. DuPont, U.S.P. Reissue, 11651, 1898), is extended to the washing of nitrocellulose. The acid nitrate without a preliminary washing is placed in a hydraulic press, the acid squeezed out, water allowed to percolate through the guncotton under pressure, a final alkaline washing being given in the same manner. The patentee claims by this method to be able to reclaim a much greater amount of spent acids with less loss of nitrated cotton, and with practically no liability to loss from fuming.

ented process of H. Anthony,[1] is a dangerous procedure unless the temperature be kept very low, as the experience of C. Weber,[2] the author, and probably others can testify. When a nitrocotton neutralized with ammonia is dried at temperatures above 60° it may explode with great violence. Haddan[3] boils the nitrocotton under pressure, increasing the pressure sufficiently toward the last so that the nitrocotton is reduced to a fine powder, thus obviating pulping.

Stabilizing. Originally stabilization was effected simply by prolonged washing in cold running water, followed by a very short treatment with a boiling alkaline carbonate solution. In the manufacture of guncotton in Austria and France to-day, it is stated this boiling process with alkaline carbonates is continued as an important step in neutralization and hence in increasing the stability. The number and length of boilings required varies in different localities and especially with the methods of nitration employed. It has been found that with the displacement process of nitration, stabilizing is much more easily effected than with the centrifugal process.[4] It is still an open question as to the quickest and most efficient method of cellulose nitrate purification. In any process the washing is continued until the desired stability as indicated by heat tests has been acquired. The nature of the water available for maceration of the nitrocotton undoubtedly has much to do with the stability, but experiments are not sufficiently conclusive for accurate generalizations on this point. A great deal of discussion has arisen as to whether washing, and especially the boiling processes, may not be carried too far as regards ultimate stability. The effect of continued boiling, while undoubtedly decomposing the unstable esters, must also have an appreciable effect in breaking down the stable ester itself. It is well known that if a nitrocotton be boiled for a sufficiently prolonged period, the percentage of ether-alcohol soluble matter will rise, and the nitrogen content fall. The breaking down of the ester is accompanied by the formation of obscure acid bodies, which have to be removed to prevent them from reacting upon the stable nitrate.

R. Robertson,[5] who has made experiments on a large scale having

1. U.S.P. 143865, 1873. He neutralized with ammonia and by his process produced a nitrocotton used extensively in photography.

2. J.S.C.I., 1892, **11**, 117.

3. E.P. 5830, 1900. See U.S.P. 210612, 1878, J. Hyatt and J. Jarvis for apparatus for washing paper pulp.

4. Systematic experiments carried out in 1905 at Waltham Abbey (Nathan, J.S.C.I., 1907, **26**, 183) to determine the most suitable and economical purification of nitrocotton, showed that in the displacement process, the number and length of boilings could be materially reduced, as compared with the ester prepared centrifugally. (For reasons see Thomson "Displacement Process").

5. Chem. News, 1906, **94**, 9.

for their object the best means of obtaining a pure and stable nitrocotton by boiling, finds that for the elimination of impurities and rapid attainment of a stable product, boiling in dilute acid at the beginning of the process is superior to an alkaline treatment, and has the additional advantage of tending to prevent undue hydrolysis of the ester itself. He found that the acid hydrolysis must not be unduly curtailed or elimination of the impurities will be rendered difficult. The importance of retaining a certain degree of acidity in the first boiling is as important, as it is disadvantageous to prolong the latter boilings. As a result of his investigations the method of a series of long initial (acid) boilings followed by a series of short (neutralizing) boilings is recommended. It appears to be pretty generally recognized that alkaline boilings in nitrocellulose neutralization interfere with temporary and permanent stability.

Various processes have been suggested from time to time, in which stability may be increased or made more permanent. The suggestions have either (1) increasing stability by the introduction of an antacid, or (2), detection of acidity in the product after manufacture. Of the first subdivision, R. C. Schüpphaus [1] was apparently among the first to devise a process of this nature, in which he recommends the addition of urea in methyl- or ethyl- alcohol solution, after the nitrocotton has been freed from all but traces of acid by washing. Skoglund [2] patented ammonium oxalate and carbamate, and more recently completely substituted ureas [3] as 5% diethyldiphenylcarbamide. Cyanamide, dicyanodiamide, tricyanotriamide [4] and salts of dicyanodiamidine [5] have also been claimed as efficient. Luck and Cross [6] as the result of their observations upon the nature and properties of the impurities eliminated in the stabilization of the cellulose nitrates under the action of diluted solvents, found that these solutions, when freed from dissolved cellulose nitrate, contained acid bodies which readily unite with metallic bases, as lead oxide, forming insoluble compounds. Upon this, they have based a process of stabilization consisting in digesting the nitrate with a 1% solution of lead acetate or zinc chloride at 80–100°, and after thirty to sixty minutes' heating, the excess of solution is removed and the nitrate thoroughly washed until entirely free from soluble metallic

1. U.S.P. 514830, 514838, 1894; E.P. 22384, 1893; ½–2% being recommended. See "Stability of Pyroxylin Plastics," Chapter XIV.
2. E.P. 18362, 1888.
3. C. Claessen, U.S.P. 909546, 1908; E.P. 16725, 1906.
4. E.P. 27515, 1903; abst. J.S.C.I., 1905, **24**, 44.
5. D.R.P. 205762, 1905. Addition to D.R.P. 201215.
6. U.S.P. 617420, 1900; E.P. 18868, 1898.

salt.[1] Mercuric chloride, which has been added to guncotton to raise the stability test, it has been found, does not increase, but rather masks the test.[2]

To detect the development of acidity in this ester after manufacture, the addition of small amounts (usually less than 0.5%) of various bodies to the nitrate before drying has been tried. Rosaniline base, diphenylamine base, and litmus and blue archil[3] among other things, have been tried. Carneiro, as the result of extensive tests[4] of diphenylamine, concludes that it cannot be considered as a stabilizer for smokeless powders. Rosaniline, when used in small amounts, has no visible effect on the cellulose nitrate, but upon the development of acidity, small, dark-colored patches appear in the gelatinized powder, and this darkening is not caused by small particles of iron held mechanically in the ester from the apparatus used in purification. Diphenylamine is probably the most used at the present time in amounts of about 0.45% calculated on the weight of cellulose nitrate. It is dissolved in the ether used to convert the nitrocotton into the colloid.

Pulping.[5] On completion of the boiling or stabilizing process the wet pyroxylin is transferred to a beating or pulping machine quite similar to that used in paper mills for pulping the raw material used in the manufacture of paper. The Cyrus Currier pulper (Fig. 23) consists essentially of a wooden tub, in which revolves a large roller containing steel blades set in iron heads. This roller revolves over a bed knife of steel plates, by which action the contents of the tub is shredded into pulp. The desired fineness is determined by rubbing a small sample of the pulped mass in the hand, spreading out on the palm and examining for fineness, or the mass is pulled to pieces between the fingers, the hands being held toward the light, and the length of the fibers which project from each side as they are torn apart being also an indication of the thoroughness of comminution. In still another method a small amount of the hydroextracted pulp is shaken up in a large bottle, the fineness being judged from the appearance. After the nitrocotton has reached the required degree of fineness, valves in the bottom of the vat are opened, the contents passing to settling tanks, where the water is allowed to run off. This

1. The product of the treatment contains about 2% of the basic oxide (PbO) in combination with the nitric acid group.
2. S. Thomas, Z. ang. Chem., 1898, **12**, 1003, 1027; J.S.C.I., 1898, **17**, 1179.
3. E.P. 2430, 1871, E. Nicholson and A. Price.
4. Z. ges. Schiess- u. Sprengst., 1909, **4**, 29.
5. The proper purification of nitrocotton on a manufacturing scale involves difficulties which can be properly appreciated only by those experts directly engaged in the process.

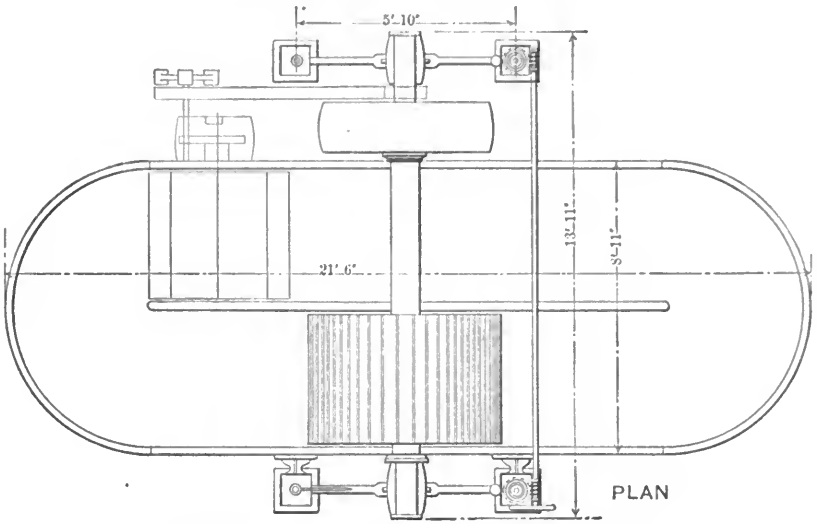

FIG. 23.—Currier Pulper and Refining Engine.

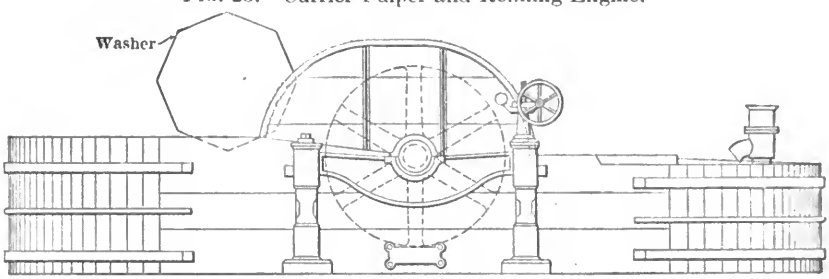

FIG. 24.—Currier Pulper and Refining Engine.

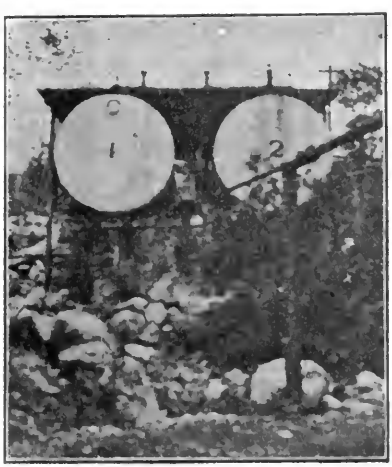

FIG. 25.—Nitrating Acid Storage Tanks.

FIG. 26.—Nitrating Acid Storage Tanks.

engine is fitted with a washing device whereby the excess of dirty water is removed during the period the contents are being pulped. The mechanism consists of an octagonal-shaped drum with perforated brass sieve, inside of which are buckets which take up the water and deliver to a central trough and thence discharge to an outside vat.

This firm also builds an "Auxiliary Refining Engine" (Fig. 24), which takes the nitrocotton from the pulper and reduces it to any fineness required in much less time than the regular pulper. This auxiliary refiner consists of an iron revolving disk with steel blades on both sides. This revolves between two other blades, one on each side, and by the action of the revolving disk the material is ground to the fineness required. To adjust the fineness, the two stationary plates may be brought closer together by means of a screw gear operated by the handle on the outside of the machine. The parts are interchangeable, the front and back plates and disk being replaceable. Excessive pulping increases the solubility of guncotton in ether-alcohol, while long treatment with even such feeble alkalis as calcium carbonate tends to hydrolyze cellulose nitrate.

Since the introduction of the very thorough system of purification by boiling, the original process of pulping as patented by J. Tonkin,[1] and three years later by F. Abel[2] has not the importance as a purification process as formerly. However, there is no doubt that with a long staple cotton the long tubes contain impurities which are best and most readily removed by disintegrating the individual fibers, and pulping not only reduces the length of the fibers by breaking, but crushes them as well, so that impurities may be removed mechanically as well as by solvent action.

Removal of Foreign Bodies. After pulping, it is often advantageous to treat the nitrocotton in some manner in order to remove from it any particles of metal, grit, or similar foreign bodies. The nitrocotton suspended in a volume of water may be run through what is called grit traps, placed at convenient intervals in a long shallow trough the bottom of which is covered with blanket. In general the foreign bodies are much heavier than the nitrocotton and fall to the bottom by gravity, where they are intercepted by the blanket fibers. An electromagnet placed in the last trap removes any particles of iron

1. E.P. 320, 1862.

2. E.P. 1102, 1865. Of the several important improvements introduced by Abel the chief is the process of pulping. Having traced the cause of instability in nitrocotton to the action of nitric acid on resinous and waxy substances contained in the cotton fiber, he succeeded in their elimination by long boiling, thorough washing and pulping the cotton in poachers. The first attempts of von Lenk to effect purification on a manufacturing scale by prolonged immersion of the nitrated cotton in running water was unsuccessful even after eleven weeks' treatment.

or steel. It is said that some factories use a "knotter," a contrivance to remove small knots or any large pieces of nitrated cotton imperfectly pulped. If the cellulose nitrate is to be used for lacquers or artificial filaments the thorough filtration which it undergoes removes all foreign particles. If for smokeless powder, filtration of the colloid cake through the "macaroni" press, as described in Chapter XVIII, is supposed to remove all extraneous matter.

Poaching. In some factories the nitrocotton is washed during the pulping by means of drum washers attached to the beating engine; in others the washing is done in separate vessels called "poachers." These usually hold about 100 lb. nitrocotton for each 110 gal. capacity, and are agitated by power-driven paddles. The nitrocotton receives from 3–7 washes in this apparatus, being allowed to settle after each washing. The wash water contains fine particles in suspension, the removal of which increases the stability, and in the case of the earlier waters, often a scum forms on the surface containing nitro bodies of low stability.

Blending. Although poaching has in a great measure blended the nitrocotton, still the solubility and viscosity of the cotton has to be brought to a definite standard, depending on the commercial use for which it is intended.[1] After the nitrocotton has been neutralized, viscosity and solubility determinations are made, from which the use of the cotton for a desired purpose is calculated. By the admixture of various batches in certain proportions, the physical properties of solubility, viscosity, and clearness may be duplicated from quite dissimilar nitrocelluloses.

Centrifugal Dehydration. But a small percentage of the nitrocottons used industrially is dried before use. In using it in the moist state, there is not only a saving in time between manufacture and use through elimination of the drying process, which at the low temperature required (30–35°) takes several days, but the danger in handling and use is materially diminished where the nitrocotton is continually moist, and in the majority of countries the transportation of nitrated cotton is prohibited except in very small quantities

1. In E.P. 14690, 1907, A. Liedbeck describes a process for producing a uniform nitrocotton by allowing the beating and nitration to proceed simultaneously. The acid mixture is introduced into a beater which is then set in motion, the cellulose being introduced by degrees through a feeding aperture in the hood, until the whole quantity weighed off has been fed in. When the mass has acquired the desired fineness it is freed from acid centrifugally, and neutralized in the regular manner. It is evident that in this process, as described, there must be a large loss of cotton, both by solution in the nitrating mixture and in subsequent washing, while the ratio of acid to cotton must be great in order that the last portion of cellulose immersed may be reacted upon by nitrating acid of practically the same composition as the first portion.

unless in the moist state. The liquid used to eventually replace the water must fulfill two conditions: It must be miscible or nearly so with water and a non-solvent of the nitrocotton, and must also be a constituent normally present in the formula in which it is intended to use the pyroxylin. This narrows the liquids of commercial value to denatured ethyl alcohol and propyl alcohol or the first fractions from fusel oil rectification, consisting mainly of propyl alcohol, and usually miscible with water in any quantity without turbidity.

The usual method after continued washing has resulted in a nitrocotton of acceptable stability, is to wring the nitrocotton and either partially displace the remaining water with the dehydrator in the centrifuge or convey the pyroxylin to a separate apparatus where the displacement of water by alcohol takes place under great pressure. In the former method all of the water which is removable by a centrifuge is wrung out, leaving from 18–30% remaining. If acetone has been used as the dehydrating agent, as suggested by Durnford,[1] the cellulose nitrate is left as a putty-like mass difficult to handle or subdivide. If ethyl or propyl alcohol is employed the nitrocotton can be readily disintegrated by the hand.[2] Alcohol is then sprayed into the centrifuge during motion until the density of the alcohol-water running out of the centrifuge has a given gravity corresponding to a known proportion of alcohol to water, when the spray is turned off and the centrifuge continued until no more liquid is wrung out.[3] The nitrocotton is then ready for use without further treatment. In any dehydrating process the alcohol, of course, is subsequently recovered by careful rectification and used over again.

In the apparatus for alcohol dehydration according to Selwig and Lange (Fig. 27) the basket of the centrifugal has, besides an outer rim, an inner finely perforated one, and a detachable cover of aluminum or bronze for covering the space between the two. In this circular space, which is lined with a cotton sack, the wet gun or collodion cotton (122 lb. or 60 k.) is rammed somewhat tightly. The detachable cover is then fitted on, and the drum closed with the tightly fitting lid. A finely perforated pipe is then inserted in an opening in the lid, through which the guncotton is given a preliminary coating of weak, already used alcohol, which is followed by a second covering of alcohol of the desired strength. Guncotton treated with alcohol by means of the centrifugal has the same alcohol content (30–33%) as that which has been hydraulically pressed out.

1. E.P. 20880, 1892.
2. See G. W. Gentieu, U.S.P. 931749, 1909.
3. Another method is to continue spraying until the alcohol issuing from the centrifuge is of the same strength as the entering alcohol.

The output of a centrifugal is said to be about 600 k. of wet guncotton in ten hours, and depending on the diameter of the centrifuge basket.

On the same principle as the Thomson displacement nitrating methods[1] a process of displacement by dehydration has been worked out in England. In order to replace the water (left in nitrocellulose after washing) by alcohol, without the use of pressure and in such a manner that a very small amount of dilution of the alcohol with water takes place, the nitrocellulose is first covered with water so that practically all air is excluded. Alcohol is then quietly run down the sides of the vessel so as to form a layer on the surface of the water. A

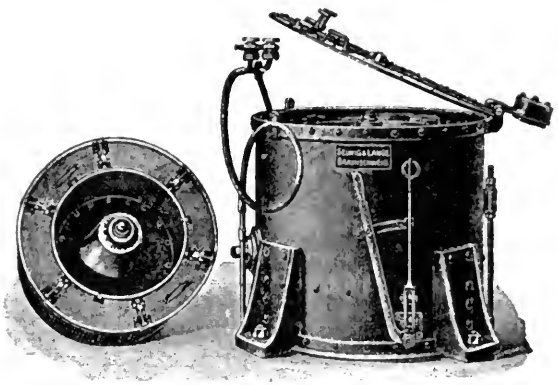

Fig. 27.—Selwig & Lange Centrifugal Pyroxylin Dehydrator.

cock at the bottom of the vessel is slightly opened, so that the water slowly flows away at a rate of fall of level in the vessel of half an inch to one inch per hour. The alcohol flows in and replaces the water in the interstices of the nitrocellulose, the treatment being continued until all the water has been displaced by alcohol. When dehydration has thus been completed, the excess of alcohol is removed by pressing or centrifuging.

In order to prevent the centrifuged nitrocotton from sticking to the sides of the wringer, a rope may be placed around the sides of the interior of the basket, and by loosening the rope after centrifugalizing, the contents is readily removed. Of less labor, however, are the hydroextractors arranged with bottom discharge, as that made by the Tolhurst Machine Works, Troy, N. Y., and shown in Figs. 28 and 29. The extractor does not differ from the usual type, except the foundation is so constructed as to allow a truck to stand under the extractor.

1. F. L. Nathan, J. M. and W. T. Thomson, E.P. 7269, 1903.

After the water has been whizzed out of the material, the lid is raised, and the load falls down into the truck, thus doing away with the necessity of shoveling it out.

Dehydration by Hydraulic Pressure. Fig. 30 represents a cross-section of a hydraulic pressure dehydrator as built by Cyrus Currier's Sons, Newark, for the late Petrifoid Co., and is a repre-

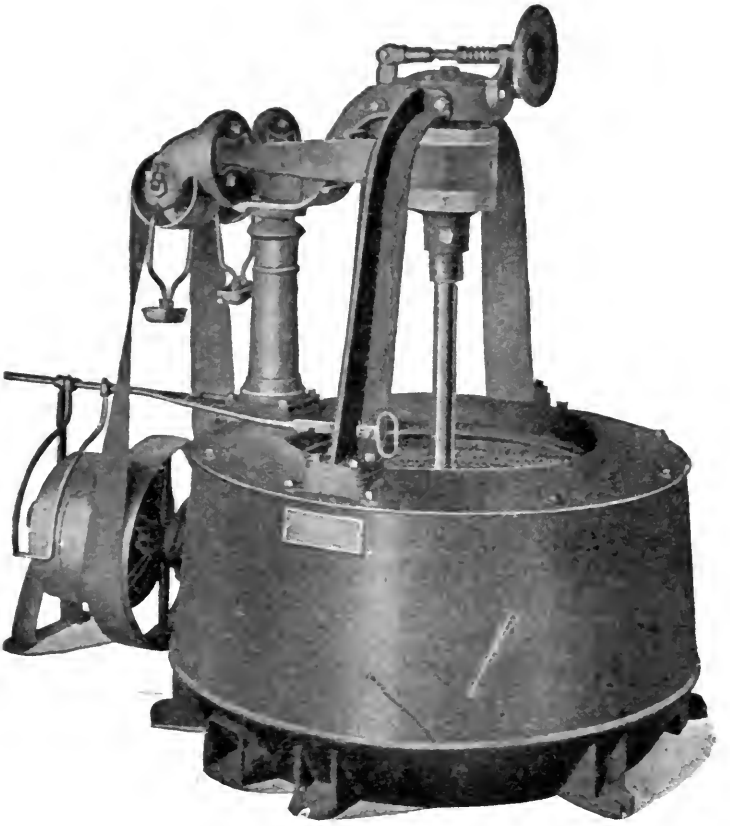

FIG. 28.—Tolhurst Hydro-Extractor Arranged with Bottom Discharge.

sentative apparatus for dehydration by pressure. It is known as a "Two-plunger Hydraulic Dehydrator," the nitrocotton being placed in cylinder *B* when the bottom is closed by the action of the ram in the cylinder *C*. This forces the perforated bottom up against the lower part of cylinder *B*, which communicates the pressure to the mass in *B*, by means of the force of the plunger actuated from the cylinder *A*. As the plunger descends and pressure is brought to bear on the

mass in *B*, the water is forced out and through the perforated bottom *D*, through the tube *E*, and into a receiving receptacle. After sufficient pressing the perforated bottom *D* is lowered, by the action of the plunger in the cylinder *C*. Pressure is then placed on the dehydrated mass from the plunger in cylinder *B*, the contents being forced out in one cake in the form of a cheese. Afterward the plunger *A* is drawn into the cylinder *A*, and the process repeated. By means of a series of 4-way hydraulic cocks, the pistons at *A* and *C* can be raised or lowered at will. If another fluid, as alcohol, is to displace

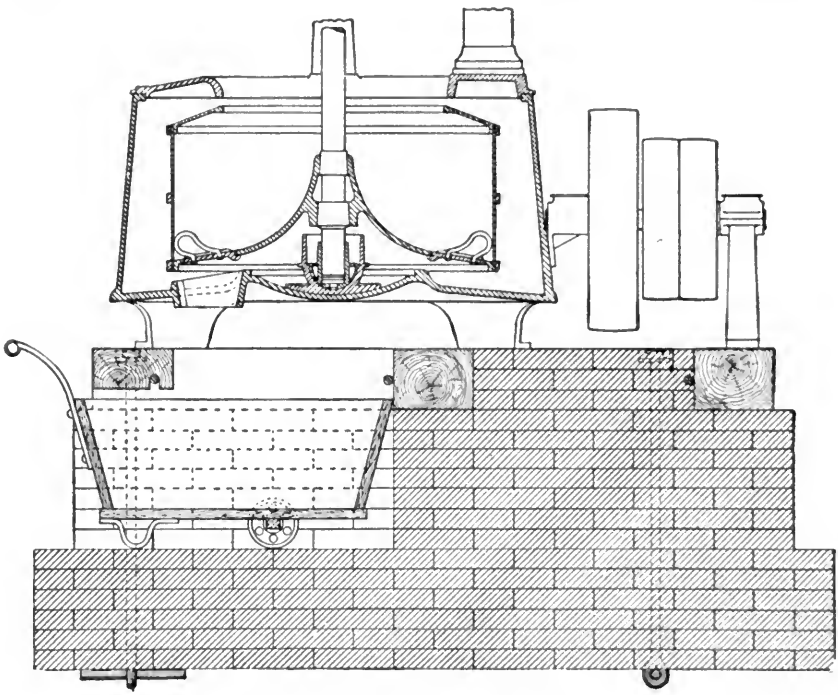

FIG. 29.—Sectional View of Fig. 28.

the water remaining in the pressed cheese before expulsion of the latter, the piston in *A* is drawn up, and by means of a funnel the required amount of alcohol is introduced. When the latter has entirely permeated the cheese by gravity, as indicated by the first drops coming out of *E*, the operation of pressure is repeated, except in this instance the fluid obtained is led to settling tanks and thence to a still to be rectified. With a dehydrator of the dimensions as shown, the cheese obtained weighs about 17 lb., of which 20–22% is fluid.[1] The

1. See also "Hydraulic Nitrocotton Press," F. I. DuPont, U.S.P. 648147, 1900;

maximum pressure which is obtained by means of the accumulator is 2,000 lb. per sq.in. The time required for placing the nitrocotton in the press, driving out the water and alcohol displaced, is about twenty-five minutes; 2½ gal. of alcohol is required, of which nearly one-half gal. remains in the cheese, and at least another gallon is recoverable from the mixed water and alcohol, when rectified as described in Chapter V.

In pyroxylin lacquer manufacture for the preparation of imitation leather and water-proofing effects, where pressure dehydrated nitrocotton is used, each formula is usually calculated on the basis of 25% alcohol in each pound of cellulose nitrate used. See also the hydraulic dehydrators described and illustrated in Chapter XVIII, under Smokeless Powder Manufacture, the pyrocollodion described there—except for its high viscosity—being suitable for lacquer manufacture.

Drying. If it is desired to reduce the amount of moisture in the nitrated cotton to 2–3% it may be spread on wooden cloth-covered frames,[1] in small detached wooden houses. Warm air at a temperature

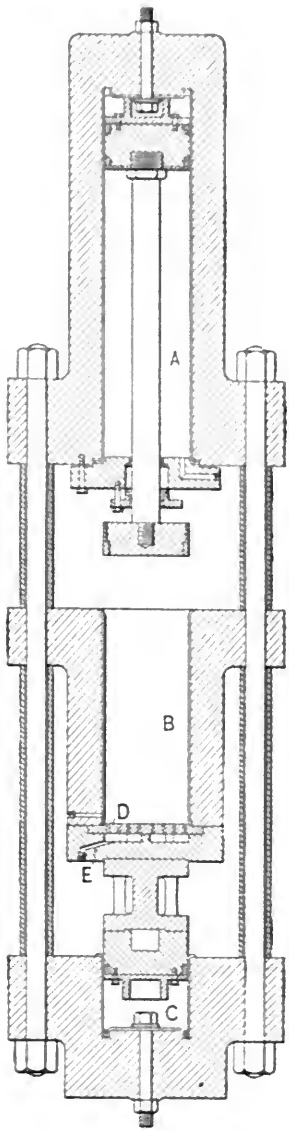

FIG. 30.—Currier Two-Plunger Hydraulic Dehydrator.

E.P. 15693, 1897; A. Durnford, E.P. 20880, 1892; "Modern Hydraulic Guncotton Presses," C. Grau, Z. ges. Schiess- u. Sprengstoffw., 1909, 3, 321, 382 (13 figures); also J. Hyatt, U.S.P. 280745, 1883; 296967, 1884.

1. According to Guttmann, this process is objectionable because the nitrocotton is thereby completely insulated, and there is danger of an electric charge, especially with elevated temperatures. To obviate this apparent danger he suggests that copper plates be provided for drying, having conical apertures of ¼ mm. diameter on top and 1 mm. on the bottom, thus rendering it impossible for them

not exceeding 40° [1] hastens the removal of the moisture, the air having been previously dried.[2] The uniformity of heat in the dry-house has much to do with the stability, which decreases with increase of temperature and moisture. The danger of drying nitrocotton may be partially avoided by treating the latter with alcoholic calcium chloride solution after alcohol dehydration, corresponding to 1–2% of calcium chloride on the weight of cellulose nitrate. In celluloid and artificial leather manufacture this amount of calcium chloride would seldom interfere with the finished products.[3] In the Volney method of drying [4] the cellulose nitrate is placed in a closed vessel and dry, heated air or inert gas introduced. A certain portion of the air is then removed from the vessel in order to reduce the pressure, the temperature being kept constant at 35–40°. These processes are alternately repeated, the pressure in the drying vessel fluctuating about 10%. For quick drying, the Quinan apparatus,[5] it is claimed, is being used in Cape Colony with satisfactory results. This apparatus is a shallow basket some 4 ft. in diameter, with the bottom of fine wire gauze. On this is laid a sheet of cheese-cloth on which is spread a layer, about 2½ in. thick, of wet nitrocellulose, which has been made as granular as possible by being rubbed through a sieve. A cover of silk cloth of fine mesh is placed in position over the nitrocellulose, to prevent any material being carried away by the current of hot air. This drying basket fits tightly on top of a circular support, into which a current of hot air is led, and thus passes through the nitrocellulose. When drying has been completed, a current of cold air is passed through the apparatus to cool the charge before removal. After drying, the nitrocotton is transported to various parts of the factory in wooden- or tin-tared containers, and with tightly fitting covers.

The Emil Passburg drying chambers, as built by the J. P. Devine Co., Buffalo, are designed for the drying of nitrocellulose rapidly at a low temperature by means of reduced atmospheric pressure

to be clogged by the nitrocotton. To prevent friction the plates may be covered with leather on the edges, and are connected with each other by metallic strips which are carried into the ground. This arrangement renders an accumulation of electricity in the nitrocotton improbable, any electricity developed being carried into the ground.

1. C. T. Tyrer, Pharm. J., 1898, 109, and Mowbray, U.S.P. 349659, 1886, places the temperatures at 32° and 38° respectively, as the maximum with which nitrocotton may be dried with safety.

2. J. Edson recommends cold, intensely dry air, maintained slightly above the freezing point (U.S.P. 249600, 1881). See F. G. DuPont, U.S.P. 516924, 1894, and E. Bronnert and T. Schlumberger, E.P. 1858, 1896.

3. F. G. DuPont, U.S.P. 712406, 1902.

4. U.S.P. 874265, 1907; see also J. W. Hyatt, U.S.P. 297935, 1884; J. E. Bousfield, E.P. 5076, 1901.

5. E.P. 22783, 1906.

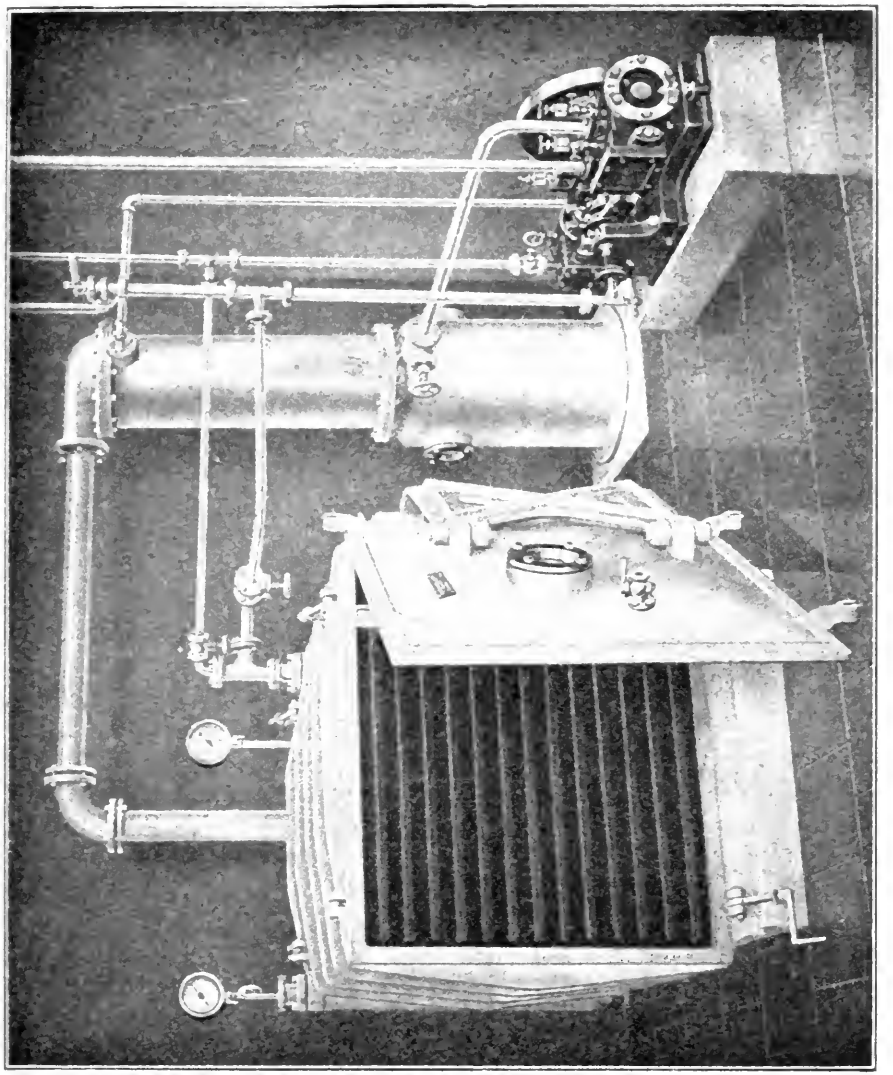

FIG. 31.—Emil Passburg Patent Drying Chamber (J. P. Devine Co., Buffalo, N. Y.).

(Fig. 31). The dryer consists of a cast- or wrought-iron chamber or cylinder, hermetically closed at one or both ends by large doors. It contains a number of steam- and water-tight heating shelves or pipes placed one above the other through which steam or hot water is circulated to produce the required degree of heat, which may be as low as 17°. The material to be dried is placed on these shelves in trays of suitable size and shape. The apparatus in Fig. 32 is provided with an expansion chamber and other safety devices to receive, in case of explosion, the expanding gases, and thereby decrease their destructive power. These gases have first to destroy the vacuum in the expansion chamber before they can exercise any pressure on the sides of the apparatus. Any excess pressure then opens the safety valves and apertures to admit of free escape of gases. In case of extraordinary pressure the whole back of the chamber, which is held in position by springs only, will be forced open, thus affording immediate relief.

Fortification and Acid Recovery. After nitration, the spent acid—richer in water and poorer in nitric acid—is usually run by gravity into storage tanks and allowed to cool before being purified or fortified. Restoration of used acids is usually comprised in three steps as follows:

(1) Elimination of impurities (cotton and nitrated cotton) in suspension.

(2) Removal of nitrogen oxides.

(3) Increasing the nitric and sulphuric acids therein to a given strength.

(4.) Mixing used and unused acid to form a new nitrating mixture. In practice (3) and (4) are practically one series of operations.

In addition to varying proportions of oxides of nitrogen in solution, the spent acid contains small amounts of cotton fiber in suspension, which it is desirable to remove before reuse. These are eliminated mechanically, by filtration through acid-washed sand, or shredded asbestos filters, or a filter composed of highly nitrated cellulose, usually cotton. In the method of F. Pool [1] the mixed acid is agitated with naturally occurring barium sulphate (barytes, heavy spar) which is practically insoluble in the acid mixture, and after thorough stirring of the barytes in the acid, it is allowed to subside, carrying with it the insoluble filaments. Filtration through a fine mesh platinum sieve has been recommended, but the author is unaware of the method having ever been used. In the Thomson displacement method of nitration there is but little cotton in suspension in the used acids,

1. U.S.P. 251938, 1882; J. Hyatt and F. Pool, U.S.P. 274335, 1883; M. Lefferts, E.P. 21, 1883.

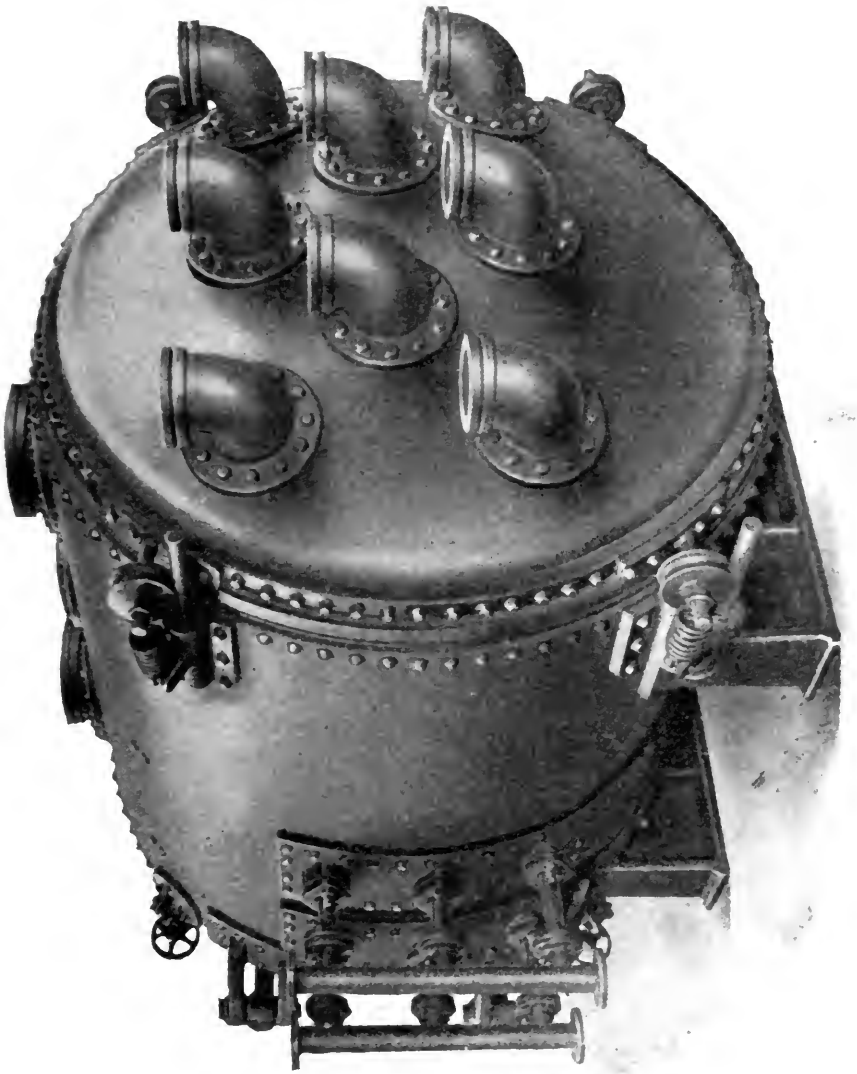

FIG. 32. Passburg Safety Vacuum Drying Apparatus for Fulminates and Nitrocellulose.

due to the fact that they are so gradually removed from the nitrated cellulose that the latter acts as a filter to retain all fine, solid particles.

The removal of nitrogen oxides is accomplished in several ways. In one method compressed air is blown through the spent acid, thus driving the gases out of solution, which are led through condensing towers of brick or volcanic stone and into weak alkali solution, forming nitrates useful as fertilizers. Another plan is to eliminate the oxides by gentle heating of the mixed acid, but nitric acid is also volatilized. Aspirating cold air through the spent acid is tedious and not always successful, and calls for previous drying of the aspirated air. Physical absorption with pumice stone has been disappointing. A system of aëration in which the spent acid in a thin stream is allowed to meet a heavy blast of air has apparently not fulfilled the claims of the inventor, due to the weakening of the spent acid, if the volume of air was increased sufficiently to eliminate all the oxides. The amount of nitrogen oxides present, in the majority of instances, is less than 1%, and in many nitrating houses is not eliminated.

To guard against accidents from leaking valves or corroded pipes, the spent acid is usually left in the storage tanks until shortly before use, these tanks being located by gravity so that in event of leaks from valves or pipes no acid will run out.

The degree which the nitrating acid has been weakened in nitric acid by the process of nitration will depend upon (*a*) the amount of nitrogen introduced into the cellulose, the higher cellulose nitrates abstracting more nitric acid per unit weight of cellulose; (*b*) the method of nitration used, there being less loss of nitric acid and oxides in the air with the displacement method than with the processes of hand, pot, or centrifugal nitration; (*c*) the extent of "fuming" in the individual nitrations, the greater the fuming (i.e., liberation of nitric oxides) the weaker the spent acid in nitrogen.

The method of fortifying by the addition of a crystalline nitrate (usually potassium nitrate) and depending on the sulphuric acid to liberate nitric acid *in statu nascendi*,[1] has been discarded on account of interference by the large amount of potassium sulphate formed by the interaction of the sulphuric acid on the nitrate. The use of nitrates soluble in water, the sulphate of which is insoluble (calcium, strontium, or barium nitrates) proved unsatisfactory, as it introduced another operation, that of filtering off the precipitated sulphate, and another expense is introduced into the process from the additional amount of sulphuric acid required to unite with the base.[2] A fortified

1. F. Pool, U.S.P. 306519, 1884; 336822, 1886.
2. F. Pool, U.S.P. 343850, 1886. The most elaborate and expensive system

acid usually consists of (*a*) the maximum of used acid which, when combined with (*b*) sulphuric acid either 98%, or sulphuric acid 98% containing amounts up to 30% sulphur trioxide (oleum),[1] and (*c*) a mixture of nitric acid 50–60% with sulphuric acid 45–35%, or less often (in the United States) nitric acid 98%.[2] The composition of the spent and fortifying acids having been obtained analytically, they are mixed in certain proportions to produce the desired mixture, one method of mixing which has been found satisfactory for large-scale nitration being as follows:

Three tanks are arranged at such a height that their contents will flow by gravity into the weighing-tank scales, and thence into the nitrating house. The spent acid is pumped into one of the storage tanks (see Fig. 26), the other two containing the sulphuric acid and the nitric acids respectively. Of the various mixing scales in use, in the United States those of the Fairbanks Co. of New York shown in Figs. 33 and 34, has proven satisfactory, both in delicacy, freedom from attack by acids, and length of life, but also on account of their simplicity of action. By means of pipes connecting the weighing scales with each tank, the required amounts of each acid are weighed in separately, and by means of a stirring arrangement connected with the interior of the scales the contents is slowly but thoroughly stirred for a considerable time (about three-quarters of an hour) to insure complete mixing. A sample is then withdrawn and subjected to analysis, any further adjustment of strength being made in the manner just described. From the scale tank the acid is run into the nitrating centrifugals or pans by gravity as required, or another storage tank may be provided, in which instance a day's supply ahead can always be kept. Nitrating houses and fortifying houses are usually arranged on a hillside if possible, in order to take advantage of varying heights for gravity flow of acids. The acid tanks ("eggs") are usually constructed of high carbon iron, the Bessemer steel tanks of G. Mowbray having apparently not come into use.

In F. DuPont's apparatus for making mixtures of nitric and sulphuric acids[3] the retort in which the nitric acid is generated is connected to an absorber containing sulphuric acid by circulating

of nitrating acid fortification is probably that of J. Hyatt, F. Pool, J. Everding, J. Stevens, and W. Wood (U.S.P. 299388, 1884), designed for handling large quantities. It has been estimated that its equipment and installation would cost at least one hundred thousand dollars.

1. R. Schüpphaus (U.S.P. 526752, 1894; E.P. 18683, 1894; abst. J.S.C.I., 1894, **13**, 1220) was the first to patent the strengthening of nitrating acids by the use of sulphuric anhydride. It is a question to be ascertained whether the use of the anhydride is prejudicial in any way to the nitrated cotton.
2. U.S.P. 350498, 1886.
3. U.S.P. 743922, 1903.

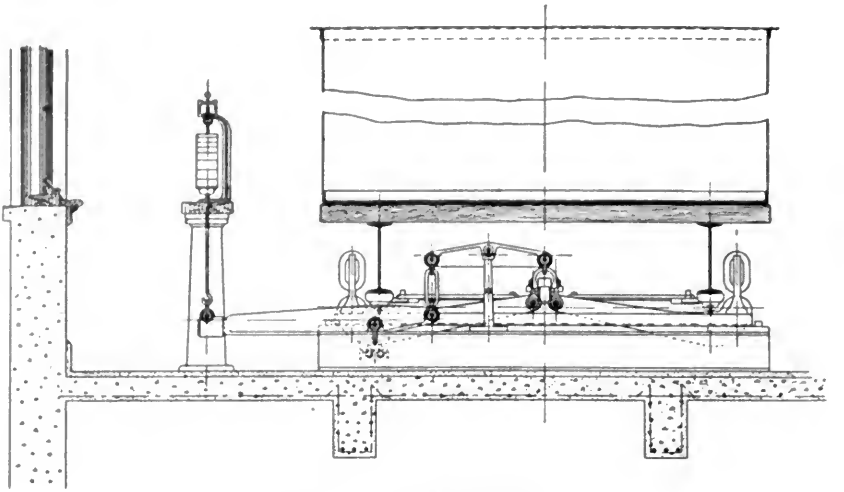

FIG. 33.—Fairbanks Scale.

These scales, shown in Figs. 33, 34, are designed especially for the weighing of corrosive fluids, as nitrating acid. The scales can be constructed so as to admit of mechanical stirring devices in the mixing tank, without impairing the accuracy—which is usually about 5 lb. in a 60000 lb. charge.

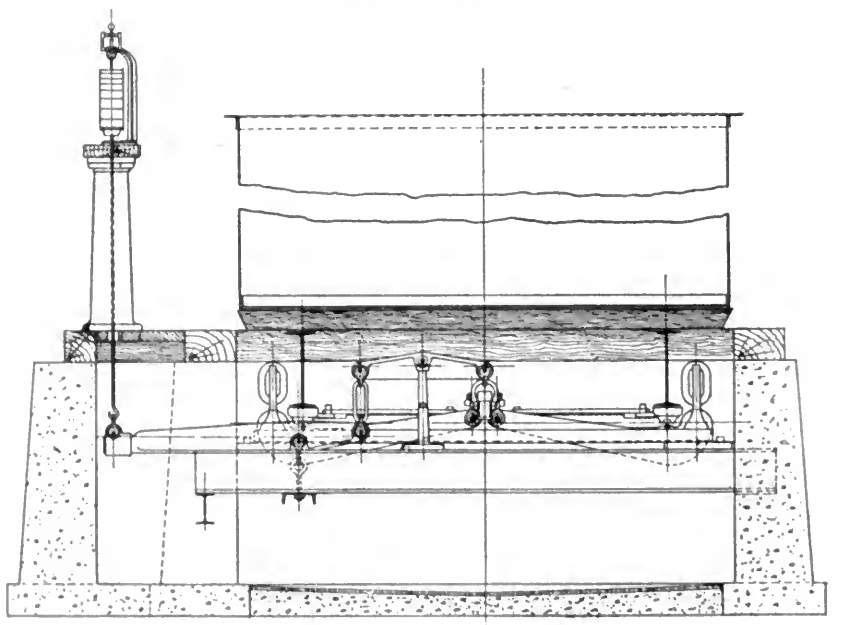

FIG. 34.—Fairbanks Scale.

conduits, one of which conveys the nitric-acid vapor to the absorber, while the other conduit—by the aid of a blower—returns the unabsorbed gases, the absorber being fitted with an agitator. The method of dehydrating sulphuric acid of C. Wilmhelm [1] is characterized by tangentially introducing over the surface of the acid, contained in a round vessel, hot gas or air, in such a manner that the concentrating acid takes up a spiral motion toward the center of the vessel, where it is withdrawn, the apparatus comprising a series of such vessels, and provision being made for the escape of the hot gas or air, after taking up the moisture from the acid, directly out without coming into contact with the charges in the other vessels. V. Vender [2] utilizes atmospheric nitrogen in his process of denitrating and recovering acid mixtures suitable for nitration, the oxides of nitrogen being subsequently condensed. A system of two towers may be used, the first of which is heated externally by the hot gases; these then pass through the second tower, which is fed by the acid mixture to be treated, and from the bottom of which strong sulphuric acid is withdrawn. The nitrous gases from the second tower are condensed, and furnish nitric acid of about 60% strength; this is admitted to the first tower, together with a part of the strong sulphuric acid previously obtained, and strong nitric acid (98%) is thus obtained by distillation, the sulphuric acid, reduced to about 75% strength, being sent back to the second tower. All the sulphuric acid and nitric acid are thus recovered in a concentrated form, and synthetic nitric acid is prepared at a reduced cost.

The Evers Denitration Tower. When the mixed nitrating acids have become so spent as to make additional fortification unprofitable, or the acid has too much dissolved cellulose and nitrated products in solution, the mixed sulphuric and nitric acids may be separated as by the Evers [3] system of denitration.[4] This comprises a denitration tower divided into three compartments increasing in size from below

1. D.R.P. 176370, 1905.

2. F.P. 405819, 1909; abst. J.S.C.I., 1909, **28**, 423. For electrolytic method for renewing waste acids from nitration see Saltpetersaure-Industrie-Gesellschaft, D.R.P. 180052, 1905, and First Addition thereto, D.R.P. 180587, 1906; abst. Chem. Centr., 1907, **1**, 1083. E. Neumann (Sprengstoffe, Waffen u. Munition, 1908, **4**, Oct. 15) has given a description of the various systems for fortifying and denitrating spent acids and recovery of nitrous gases.

3. D.R.P. 145743, 1903; 182216, 1902. In D.R.P. 176369, 1904, R. Evers describes a method comprising a vessel upon whose bottom are two coils, one within the other, through which the fluid to be heated is passed, alternately, so that the heat of the concentrated acid, which passes directly from the apparatus through a short tube set into the wall of the vessel, is given up to the dilute acid to be next introduced into the midst of the vessel.

4. J. Rüdeloff, Z. ges. Schiess- und Sprengst., 1907, **2**, 144. This article describes the usual methods and apparatus for denitrating mixed acids.

upward. Each compartment is filled at its upper portion with pieces of earthenware or other filling material, space being left at the bottom, in each case, for collecting the acid, which is then passed on to the next compartment below by an acid distributor. A hot air and steam injector is also fixed at the base of each compartment. At the top of the tower is the supply chamber, similarly fitted with injector and distributor. Air and steam are introduced at a temperature of not less than 400°, and the rate of flow is so regulated that they travel with the greatest speed in the lowest compartment and slowest in the top chamber. All organic compounds in the acid are oxidized and a water-white sulphuric acid of 60° Bé. obtained, containing only a trace of nitrogen compounds. The condensed nitric acid consists of 80% of an acid of 40° Bé. and 20% of 36° Bé. containing only 0.2–0.3% of nitrous acid. A special apparatus, containing bundles of small tubes, precedes the main condensing apparatus, and is said to yield good results in preliminary condensation.[1]

The Redpath Method of Acid Calculation. The following graphical method for the determination of the quantity of fortifying and sulphuric acids to be added to preliminary mixings was communicated to the author by the late Leon W. Redpath, and has never before been published. As devised by him it assumes that the concentration of the various components in the fortifying acid, the percentage composition desired in the final mixing, and the total number of pounds of acid in the preliminary mixing are constant. If the conditions conform to these specifications, the results will be mathematically correct; but should the conditions deviate from these specifications a proportional error will be introduced. However, under working conditions the error so introduced will be within the limits of error allowed for the chemical determination.

The method requires the preparation of two charts. Fig. A determines the effect upon the composition of the preliminary mixing caused by the further addition of fortifying acid.

It is first necessary to make a calculation to determine the effect produced upon the components of the preliminary mixing by the further addition of 1,000 pounds of fortifying acid.

Let a = the per cent of one component of the fortifying acid.

b = the per cent of that same component as desired in the final mixing.

c = the total number of pounds to be adjusted.

1. In the case of denitrating the acids received from the manufacture of nitrotoluene, a special vessel, U-shaped in cross-section, is placed in the system immediately after the tower, to condense any nitrotoluene carried over, and thus prevent a block in the condensing pipes.

Then

$\frac{a-b}{c}$ = the effect produced upon that component in the preliminary mixing by the addition of one pound of fortifying acid.

For example: If the sulphuric in the fortifying acid has a concentration of 41.8%, and if the concentration of the sulphuric acid desired in the final mixing is 56.50%, and if the total quantity of acid used in the preliminary mixing is 54,000 pounds, then

$$\frac{41.80-56.50}{54,000} = -.000272.$$

Or, the addition of 1,000 lb. of fortifying acid would have altered the strength of the sulphuric acid .27%.

The second calculation is made by the same method to determine the effect upon the nitric by the addition of 1,000 lb. of fortifying acid to the preliminary mixing.

Assuming that the nitric in the fortifying acid is 52.40%, and that 28.2 is desired in the final mixing, then $\frac{52.40-28.20}{54,000} = .000446$, which will be the effect upon the nitric of the preliminary mixing by adding 1 lb. of fortifying acid to it. The addition of 1,000 lb. of fortifying acid would, therefore, alter the composition by .45%.

It will be noted that the effect indicated upon the sulphuric acid is a minus quantity. This indicates that in the addition of fortifying acid, the sulphuric component is decreased, which we know to be the case.

Chart *A* is now plotted with these figures as a basis. Selecting a point near the center of a sheet of cross-section paper, and taking the origin at the top, the quantities representing the number of pounds of fortifying acid to be used are set off downward, according to some convenient scale.

Quantities indicating the desired change in composition of the preliminary mixing are set off to the right and to the left. The decreasing composition of the component will be taken as indicated by the direction to the left, while increasing composition is indicated by the direction to the right. A point set off upon the 1,000-lb. line and to the left, according to a change equal to .27% (calculated above) is connected by a straight line with the origin. A point upon the 1,000-lb. line to the right, equivalent to a change of .45%, is also connected with the origin by a straight line. The right-hand

line now indicates for all positions the relative alteration of the nitric acid in the preliminary mixing for the addition of a corresponding number of pounds of fortifying acid. The left-hand line indicates the change in the composition of sulphuric acid of the preliminary mixing for a corresponding addition of fortifying acid.

Chart *B* is made in a similar manner, but is drawn upon tracing cloth. The origin in this case is taken at the bottom of the paper, and the minus quantities are plotted upward to the right, while the positive quantities are plotted upward to the left.

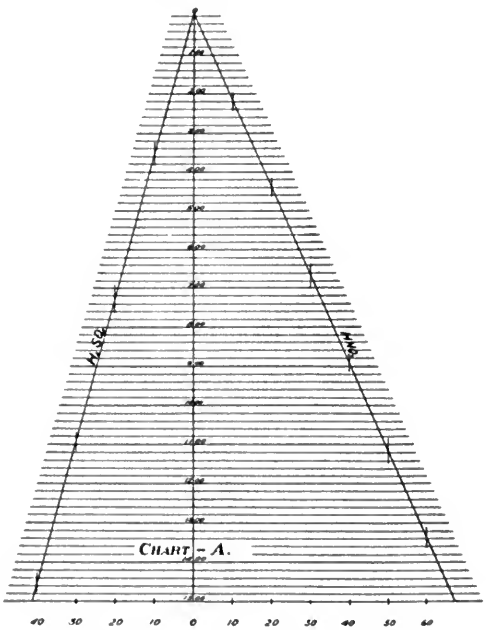

FIG. 35.—Chart *A* for the Redpath Graphic Method of Nitrating Acid Calculation.

Assuming the straight sulphuric to have been 97.3% H_2SO_4, by similar calculation the addition of 1,000 lb. of sulphuric acid would raise the sulphuric component .76%, while it would have lowered the nitric .52%.

By superimposing chart *B* upon chart *A*, it is possible to read by inspection the number of pounds of fortifying acid and of straight sulphuric acid which should be added in order to produce the required adjustment of the preliminary mixing.

The action of the two charts is perhaps best seen by assuming a case of the addition, for instance, of 400 lb. of fortifying acid and

200 lb. of sulphuric acid, and observing the relation between the two charts. Place the 200 lb. line of chart *B* directly over the 400 lb. line of chart *A*, and in such a position that the intersection of the left-hand diagonal with the respective pound lines coincide. It will be observed that during the addition of the 400 lb. of the fortifying acid the sulphuric acid has fallen in concentration .11%, and that from the addition of 200 lb. of sulphuric the sulphuric component is raised .15%. The algebraic sum of these two quantities, an increase of .04, will be found to be indicated by the position of the origin on chart *B*, its position now lying .04 to the right of the neutral line of chart *A*. Simultaneously, it will be found that during the

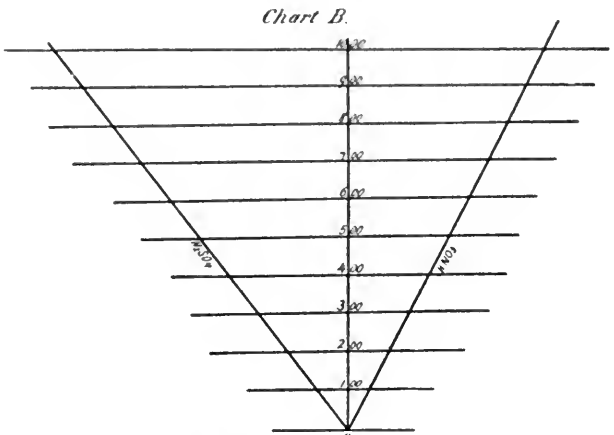

FIG. 36.—Chart *B* for the Redpath Graphic Method of Nitrating Acid Calculation.

addition of 400 lb. of fortifying acid, the nitric component was raised .18%, but that during the addition of the 200 lb. of sulphuric this component diminished .11%, a net decrease of .07%. This position on *A* will be found at a distance of .03 to the right of the position of the origin of chart *B* as it is now situated. It will also be found that there is the same distance of .03 at the level of the 200 lb. line on chart *B* between the right-hand diagonals on charts *A* and *B*. Had the diagonal on chart *B* been continued from the intersections of the diagonal on *A* with its 400 lb. line, and had it been continued downward with its own "slope" from this point, the line thus assumed, parallel to the diagonal on *B*, would have intercepted the base line at a position .03 to the left of the origin on *B* or .07 to the right of the neutral line of *A*: .07 being the algebraic sum of the alteration caused in the HNO_3 component by the addition of 400 lb. of fortifying and

200 lb. of sulphuric, while the .03 is the algebraic difference between the resultant effect upon the sulphuric and nitric and components by the additions so made.

This example which we have just considered is, of course, the reverse of the usual operation. Ordinarily, from the analysis of the preliminary mixing, the required change which must be made is determined. The usual operation would then have been performed by placing the neutral line on *B* directly over that ordinate which shall represent the desired increase in the sulphuric acid component. With chart *B* in this position, raise it and lower it perpendicularly across the surface of the chart until it shall so occur that at the level of the intersection of the two left-hand diagonals there shall be a distance between the two right-hand diagonals equal to the algebraic difference of the change desired in the two components. Thus, if it were desired to raise the sulphuric acid .04, and to raise the nitric acid .07, the algebraic difference between these two quantities would be .03, and the chart *B* should be so placed that with the neutral line of *B* over +.04 on *A* there shall be a distance equal to .03 between the two right-hand diagonals at the altitude of the intersection of the left diagonals.

When such a position has been found, the quantities of fortifying acid and of sulphuric acid required will be read by inspection upon charts *A* and *B* at this same altitude.

The process of adjusting the chart *B* to its correct position will probably require about one minute, if the chart is thoroughly understood, and it will be found convenient to make use of a pair of dividers in setting off the distances required between the diagonals. It will also be found convenient to place chart *A* upon a drawing board and to insert chart *B* in a light frame, and to arrange some suitable guide for directing the perpendicular motion of this latter chart, then when the correct lateral position has been determined, clamp the guide, and maintaining this position, it is a simple matter to raise or lower the frame until the correct position is discovered.

It may be added that while the scope of this graphical method is somewhat limited by the size of the charts, it is a simple matter to reduce these quantities to a mathematical formula; so simple that the result can be obtained almost mentally in a moment. This formula will enable mixings to be made up directly from known spent if this is desired, except for the fact that variation of the composition of the fortifying would introduce greater error.

Dangers in Connection with the Nitration of Cellulose. With the exception of the nitration process and the possible drying of the

nitrocotton instead of solvent displacement by centrifuge or hydraulic press, the entire process is worked with a large excess of water, and the probability of explosion thus reduced to the minimum. Among the more important precautions which should be observed may be mentioned: the careful extraction of the resinous and waxy matters from the cotton previous to nitration, or their thorough elimination in the boiling and poaching processes. In the actual nitration process, the danger, except from acid burns, does not commence until the operation of wringing out in the centrifugals, and also in plunging the acid-extracted cotton into the first wash water. Great care is necessary that the wrung-out nitrocotton at once comes in contact with a large volume of water, and that it is thoroughly disintegrated so that the cold water entirely permeates the mass. If decomposition once starts, it is difficult to stop before loss of product results. The warmer the nitrated mass and the less the volume of water, the more liable is it to decompose; hence on warm and damp days the centrifugals are more apt to fire.

The patented process of neutralization with ammonia is a source of danger, as the ammonia possibly forms ammonium nitrate with traces of free acid on the fiber, and this may explode with great violence at temperatures below 40°. The increasing practice of displacement of water by propyl and ethyl alcohols, the latter made possible by the use of denatured alcohol, has almost entirely done away with the practice of drying the nitrocotton, and thus removed a great source of danger, even when the temperature of the dry-house was kept down within supposedly safe limits.

CHAPTER IV

SOLVENTS AND NONSOLVENTS

For several years after the discovery of the cellulose nitrates investigators confined their efforts in this field entirely to the perfection of this product in a dry form, and it was not until after the introduction of collodion in medicine by Maynard in 1848, and its use in photography by Scott Archer in 1851, that the possibilities of solutions of the cellulose nitrates became apparent. The "ether glue" or collodion of Maynard "puckered" and his "sticking plaster peeled;" Scott Archer could not produce films without great wrinkling and distortion; Parkes and Spill found in attempting to develop their plastic arts that it was impossible to obtain satisfactory results, being hampered and limited by too few and too hygroscopic solvents. Then, as now, the pyroxylin arts only expanded at those periods when someone added to the list of solvents or devised improved ways of combining them. In general, therefore, it can be safely said that the main factor in the development of the industrial uses of the cellulose nitrates has been due mainly to discoveries and extensions of solvents. While mechanics enters largely into modern plastics and artificial filaments, in a final analysis its success is due primarily to appropriate solvents. Camphor in the hands of Hyatt developed celluloid. Amyl acetate in the hands of Stevens laid the foundation for modern pyroxylin lacquers and imitation leathers. It was acetylene tetrachloride that enabled Lederer to produce an uninflammable plastic from cellulose acetate. Nowhere when investigators attempted to expand the art were they able to attain the desired results on account of unsuitability of solvents. At the present time the world-wide endeavor to produce satisfactory non-inflammable continuous photographic films has resolved itself into a search for suitable solvents. The desirable commercial properties of pyroxylin compounds are to be obtained mainly by an adjustment of simple or compound solvents, and the superiority of the product of one manufacturer over that of another is primarily the result of the application of the knowledge and ability to manipulate solvents. A study of the historical development of the various arts comprised in these

pages will show that the failures of scientists who contributed to that progress, as viewed in the perspective of present knowledge, has been due mainly to a lack of appreciation of the fundamental importance attached to the solvent as distinguished from the pyroxylin—so many investigators erroneously regarded the cellulose nitrate as the essential factor, and the dissolving liquids or converting solids of minor importance. For this reason, the solvents of the cellulose nitrates are treated somewhat in detail; historically, because as new fields of usefulness develop, it is found that formerly discarded solvents give the properties desired, and hence a liquid abandoned as inappropriate for existing uses to-day may become of immense value in the future as the uses of the pyroxylins are industrially extended; from a manufacturing point, as satisfactory and accurate methods for the preparation of amyl alcohol and acetate are difficult to obtain, if indeed they are to be found in the usual repositories of science.

A. Parkes early found, in attempting to evaporate alcohol-ether solutions to dryness, that the film became opaque and crumbled. This he finally attributed (and truly) to water in the alcohol used, hence his process of "rendering wood spirit free from water by distillation with calcium chloride"[1] or "chloride of lime."[2] The question of moisture was not overcome in this manner entirely, for even working with anhydrous solvents, the speed of evaporation was so great that the temperature of the atmosphere in the immediate neighborhood of the film was reduced below the dew point, and so much moisture was absorbed in evaporating to dryness as to still make a white and worthless film. Parkes recognized the principle that a heavy, high-boiling but volatile solvent was necessary, and nitrobenzene[3] was patented. This, however, was too slow in evaporating, was poisonous, and imparted a pronounced and objectionable odor.[4] Aniline was found to be too weak in dissolving power, and acetic acid attacked the vessels in which the materials were manipulated and affected the eyes of the workmen. He found, however,[5] that by combining camphor either with sulphurous acid, turpentine or wood alcohol excellent latent solvents result, and in this respect was the pioneer in recognizing the value of camphor as an ingredient of pyroxylin mixtures.

1. E.P. 2359, 1855.
2. E.P. 1123, 1856; he distilled the wood spirit with 1–2 parts chloride of lime or ½ part of sulphuric acid.
3. E.P. 1313, 1865; he took 100 parts pyroxylin and added wood naphtha "distilled off chloride of calcium" and then added 10–50 parts nitrobenzol.
4. See A. Parkes, E.P. 3163, 1865; 2709, 1866.
5. E.P. 2675, 1864. Acetone was known to be an excellent solvent prior to 1864 (W. Field, J.A.C.S. 1894, 16, 544).

Daniel Spill, a co-worker with Parkes, discovered that an ethyl alcohol solution of camphor, camphor oil, or acetaldehyde [1] made excellent solvents.[2] D. H. L. Hallium formed "etherized oil" by distilling various essential oils with alcohol or ether and sulphuric acid, intended as latent solvents. C. S. Lockwood [3] endeavored to increase the efficiency of camphor as a latent solvent by adding a small amount of chloral or chloral hydrate to lower its fusing point. According to W. McCaine [4] the essential oils of cassia and cinnamon combined with alcohol or in conjunction with hydrocarbons in the proportion of 1 part to 8 of alcohol, produce a latent solvent with a wide range of usefulness. Parkes later[5] brought out the fact that if camphor is combined with either carbon tetrachloride, carbon bisulphide or sulphurous acid, there results a latent solvent of higher dissolving power than where camphor is used alone.

On December 19, 1882, John H. Stevens obtained six United States patents for the following direct and latent solvents, in which were summarized nearly all of the previously proposed bodies which experiment had proven would gelatinize or dissolve the various cellulose nitrates. Patent 269340 comprised oil of spearmint, nitrate of methyl,[6] butyric

1. E.P. 3651, 3984, 1868; 1603, 2510, 3102, 1869; U.S.P. 91377, 97454, 1869; 101175, 1870 (most important). In E.P. 1739, 1875, Spill clearly recognizes the value of hydrocarbons (by which he had in mind benzene), and was the first to point out that a pyroxylin which will not dissolve in alcohol may be made to do so by the action of benzene. It is a combined solution and gelatinization in which the benzene acts as an "exhilarative solvent." In this connection it may be mentioned that a pyroxylin which is insoluble in ethyl alcohol may sometimes be induced to go into solution by the addition of a small amount of castor oil, the latter alone having no solvent effect. Methyl alcohol with castor oil is not as efficient in this respect. Spill's favorite formula was alcohol 250, ether 150, nitrobenzol, 10, camphor 33, and benzol 250 (all parts by weight), and with aldehyde: xyloidine 27, castor oil 27, camphor 6, solvents (containing 30–50% acetaldehyde) 40 parts.

2. Spill, an assistant to Parkes, took up the work at the point where the latter failed, and achieved success. It is significant in this connection that Spill used solvents of lower volatility, less hygroscopicity and greater solvent power than did his former employer.

3. U.S.P. 246891, 1881; chloral hydrate and camphor, both solids, form a liquid when brought together. And Lockwood found that the latent solvent point of camphor could by this means be lowered in the presence of 5–20% chloral.

4. U.S.P. 262077, 1882; the advantages in the use of this oil are (1) a portion of the oil always remains in the compound to act as solvent of the solidified collodion if again exposed to heat; (2) the solvent powers are sufficiently developed to dissolve the pyroxylin at so low a temperature that sufficient heat may be obtained by the use of hot water.

5. Henry (not Alexander) Parkes, U.S.P. 265837, 1882; E.P. 1865, 1866, 1879; F.P. 132195, 1879; Belg. P. 56230, 1881; as direct solvents are introduced camphor and carbon tetrachloride; camphor and carbon bisulphide; turpentine, sulphurous acid, benzine or gasoline, but always in conjunction with camphor. Shellac is also specified as a pyroxylin solvent in connection with camphor. See also, H. Parkes, E.P. 974, 1861.

6. Methyl nitrate, CH_3NO_3, a liquid of ethereal odor resembling somewhat that of nitrous ether, boils at 66°, and has a *sp* gr. of 1.2167 at 15°/15°. At one time it was used considerably in the manufacture of certain organic dyestuffs (iodine green and iodine violet) but owing to a series of fatal explosions which followed

ether, valeric ether,[1] benzoic ether,[2] formic ether,[3] salicylate of methyl,[4] formate of amyl,[5] acetate of amyl, butyrate of amyl,[6] valer-

its employment, its high volatility and expense of production, it is no longer used. It explodes when struck or when its vapor is heated, and is an excellent solvent of resins and the cellulose nitrates.

1. Ethyl *iso*valerate, $C_2H_5 \cdot C_5H_9O_2$, a colorless, mobile oil, readily soluble in alcohol, ether and chloroform, boils at 134-135°, and has a sp.gr. of 0.8714, at 15°/15°. Its ethyl alcohol solution finds extensive use as an ingredient in artificial fruit essences, principally those of strawberry and raspberry. It is 6 or 8 times more expensive than amyl acetate, and has never been used as a direct solvent on account of the cost of production. The bouquet developed in crude fusel oil which has been partially oxidized into valeric acid with potassium bichromate and then converted into acetate contains small amounts of ethyl as well as amyl valerate.

2. Ethyl benzoate, $C_2H_5 \cdot C_7H_5O_2$, a colorless liquid of characteristic and aromatic smell, and having a boiling point of 213° and a sp.gr. of 1.047 at 20° 4°, may be readily prepared by the action of ethyl alcohol on benzoic acid in the presence of a strong dehydrating agent. It is an excellent solvent of copal, dammar, and sandarac as well as the cellulose nitrates, the cost of benzoic acid and relatively high boiling point being the principal drawbacks to its use in large quantities. Benzyl benzoate, a constituent of Peru and tolu balsams, is of interest, from the use of the latter two products in pyroxylin lacquers to impart toughness to the film. Propyl, butyl, and amyl benzoates, with boiling points of 229°, 247° and 261° respectively, have a too low volatility to be acceptable solvents. Methyl benzoate is too costly.

3. Ethyl formate, $C_2H_5 \cdot CO_2$, a thin, mobile liquid, possessing a rather pleasant penetrating smell and cooling taste, boils at 55° and has a sp.gr. of 0.9064 at 20°/4°. One part is said to dissolve in 9 parts of water at ordinary temperature. It is readily soluble in alcohol and ether, and possesses an odor of peach kernels. It is not only exceedingly hygroscopic, but decomposes in contact with moisture, liberating formic acid. This property alone would render it unfit as a solvent for lacquers, artificial leathers and photographic films, the free acid tending to induce decomposition of the pyroxylin. This is not to be confounded with ethyl orthoformate, which boils at 145-146°. The corresponding methyl formate is said (Mayberry, J.A.C.S., 1883, **5**, 259) to be present in crude wood spirits, and to account in a measure for the excellent solvent properties of the latter. Commercial ethyl formate is usually contaminated with the methyl ester, due to its manufacture from crude wood spirit. Methyl and ethyl formates find use in the formation of artificial arrack and rum essences.

4. Methyl salicylate, $CH_3 \cdot C_7H_5O_3$, the principal constituent of oils of wintergreen and sweet birch, is a colorless, strongly refracting liquid which boils at 224°, and has a sp.gr. of 1.197 at 0°/?°. It is made indirectly from toluene, but as yet not at a sufficiently low price which will enable it to compete with amyl acetate. This ester is an excellent solvent of pyroxylin, and is used to a very limited extent to correct objectionable odors in other solvents, principally acetone oils and wood oils. Ethyl salicylate is the equal of the methyl ester as a pyroxylin solvent. The phenyl ester, known also as salol, forms an excellent latent solvent, and is readily soluble in alcohol and fusel oil.

5. Amyl formate, $C_5H_{11} \cdot CO_2H$, a colorless liquid of penetrative odor, boils at 116°, and has been advocated as a desirable pyroxylin solvent. In volatility, stability and great dissolving power it appears to be the equal of the corresponding acetate, and only the high cost of formic as compared with acetic acids prevents its commercial use in large amounts. A. Bedal (E.P. 12157, 1899) has obtained protection for the manufacture of amyl formate. Both propyl and butyl formates are also stated to be excellent solvents, and have boiling points between ethyl and amyl alcohols. Ethyl formate decomposes upon long contact with moisture.

6. Amyl butyrate, $C_5H_{11} \cdot C_4H_9O_2$. The *iso*amyl ester boils at 176°, and has a sp.gr. of 0.8823 at 0°/4°. A mixture of methyl butyrate (b. pt. 101°) with amyl butyrate is stated to produce a solvent, which in all its physical deportment more closely resembles amyl acetate than any other simple or mixed solvent. These two, as well as propyl, *iso*propyl and butyl butyrates, which boil at 143°, 128°, and 165° and have gravities at 0° of 0.8872, 0.8787, 0.8885, are all excellent solvents of

ianate of amyl,[1] sebacylic ether,[2] oxalic ether,[3] amylic ether,[4] amylic oxide,[5] oxidized wood alcohol,[6] oil of cassia,[7] oil of cherry laurel,[8] heavy cinnamon oil,[9] oil of melissa,[10] rectified oil of birch tar,[11] and oil of pennyroyal.[12] Patent 269341 included as latent solvents oils of car-

pyroxylin, besides dissolving many resins including copal, sandarac, mastic and elemi, and in addition to this are practically insoluble in water, so that they may be obtained in an anhydrous state without difficulty. The only obstacle to their extensive use is the cost of butyric acid or butyrates to produce them. They are all colorless, mobile liquids, with characteristic odors.

1. Amyl valerianate, $C_5H_{11}\cdot C_5H_{11}O_2$, boils at 188° (Kopp and R. Schiff, Ann., 1886, **234**, 344) and has a sp.gr. of 0.87 at 0°/?°. It smells like apples when dissolved in 7 parts alcohol. It is used principally in artificial flavors, being too slow in evaporation to make a desirable pyroxylin solvent, although it dissolves the latter with avidity. The methyl, *n*-propyl, and *iso*butyl valerates, which boil at 116°, 156°, and 169°, would be more satisfactory. Butyl valerate is said to dissolve the harder copals and ambers without a preliminary heating of the latter, at the same time dissolving a wide range of nitrocelluloses. The valerianates are several times more costly than the corresponding acetates.

2. Commercial sebacic ether is a mixture of methyl-, monoethyl- and diethyl-sebacates, all of which have high boiling-points (above 250°). Sebacic acid results from the dry distillation of fats under partial vacuum, and the sebacates are made by treatment of the acid with the desired alcohol and a dehydrating agent. Although energetic solvents, they are not used on account of their cost. A number of wine, brandy and bitters flavors contains this ester in small amounts as a "fixative," to render the other odors more permanent and distinctive.

3. Principally diethyl oxalate, with small amounts of monoethyl oxalate (ethyl oxalic acid). This ester is usually prepared by heating ethyl alcohol with oxalic acid. A portion of the oxalic acid is reduced to formic acid, so that the commercial ester usually contains ethyl formate as well. It is a colorless oil with slight odor, decomposed by water and easily soluble in alcohol.

4. 5. Amyl ether or amyl oxide, $C_{10}H_{22}O$, exists in two forms, *iso*amyl oxide, $(C_5H_{11})_2O$, and *iso-sec*-amyl oxide. The former boils at 173°, and the latter at 163°. Both are formed upon treating crude fusel oil with a dehydrating agent (sulphuric acid) and distilling. They are ethers, not esters. Formerly several patents were obtained for the production of these simple and mixed ethers by the distillation of fusel or other alcohols alone with sulphuric acid or mixed alcohols, as methyl, ethyl, propyl and amyl alcohols with the same acid. It was found that their high boiling point and difficulty in obtaining in a neutral state were serious drawbacks to their extended commercial use.

6. A number of imperfectly characterized bodies results, including probably methylal.

7. The solvent power of this essential oil rests entirely upon the cinnamic aldehyde present. A good grade of cassia oil should assay 80-85% cinnamic aldehyde by means of the Hanus (Z.U.N.G., 1903, **6**, 817) gravimetric semioxamazone (J. pr. Chem., 1874, **10**, 196) method. (See Schimmel's Semiannual Report, 1904, 19.) Pure cinnamic aldehyde, produced synthetically is an excellent deodorizer in collodions and pharmaceutical preparations containing pyroxylin in solution.

8. The latent solvents present in this oil are considered to be pinene, cineol and geraniol. (It is geraniol and citronellal which give to oil of citronella its latent power as a cellulose nitrate solvent.)

9. This consists of not clearly defined sesquiterpenes and cinnamic aldehyde, with small amounts of benzyl benzoate. (The value of balsams tolu and Peru as solvents rests mainly upon the presence of benzyl benzoate, and less so upon the benzyl alcohol, and benzyl cinnamate normally present.)

10. Oil of balm.

11. A series of experiments made by the author, with a sample obtained from Schimmel & Co., were entirely negative as a solvent, the oil not even gelatinizing the pyroxylin.

12. Consists principally of pulegone as the solvent constituent.

away,[1] hyssop,[2] sage,[3] tansy,[4] cloves,[5] or wintergreen and mixtures of them. In patent 269342 there are embraced dinitrobenzene [6] and coumarin.[7] Number 269343 designated acetone, acetate of ethyl, acetate of methyl, fusel oil, amylic alcohol, oils of chamomile,[8] fennel seed,[9] palmarosa,[10] and worm seed, but always in conjunction with camphor. No. 269344 included oils of hyssop, sage, tansy, wormwood fennel seed, cloves, cinnamon, anise, sassafras, chamomile, wintergreen, caraway or dill, but in combination with fusel oil, acetal,[11 12] nitrate of amyl,[13] or mixtures of any of them. In the last patent—269345—Stevens enumerated ethyl or methyl alcohol with nitrate of amyl, nitrite of amyl,[14] oils of chamomile, valerian, golden rod, sassafras, cinnamon, cumin, cynae ether, dill, elecampane, fennel seed, heavy wine,[15] wormseed, myrtle, laurel, marjorem, peppermint,

1. Contains a terpene, $C_{10}H_{16}$, identical with citrene and carvol.

2. See Schimmel's Semiannual Report, 1906, 41.

3. The solvent power is said to be due to salviol, the latter increasing with the age of the oil; hence old and partially resinified oils of sage are more energetic solvents than when freshly distilled.

4. According to Bruylants (J. Ph., 1877, (4), **26**, 393; Ber., 1878, **11**, 449; Persoz, C.R., 1839, **8**, 433) the cellulose nitrate solvent constituent is tanacetyl hydride, which is present to the extent of about 70%.

5. The latent solvent is eugenol and *iso*eugenol, caryophyllene being a strict non-solvent. Therefore the solvent value of this oil is in direct proportion to the amount of eugenol present.

6. Exists in three (*o*-, *m*-, and *p*-) modifications. The commercial product consists mainly of meta-dinitrobenzene, colorless needles, melting at 90°, and readily soluble in boiling alcohol. The trinitrobenzenes, of which the symmetrical derivative is the most important, have also been patented as latent solvents, and on account of higher boiling point, are less volatile and possess a less pronounced odor than the di- or mono-nitrobenzenes.

7. The odoriferous principle of the tonka bean, and used in combination with vanillin, for "compound" extracts of vanilla. The cost of coumarin has never caused it to be used. The same may be said of vanillin, heliotropin, menthol, thymol, eucalyptol—somewhat similar bodies.

8. This oil consists of *iso*butyl *iso*butyrate, *iso*butyl angelate, amyl angelate, amyl tiglate, hexyl angelate, hexyl tiglate, and anthemol. (Fittig and Kobig, Ann., 1879, **195**, 106; van Romburgh, Rec. Trav. Chim., 1886, **5**, 220; Demarçay, C.R., 1873, **77**, 360), all of which, with the possible exception of the last-named constituent, are direct active solvents.

9. Solvent effect due to anethol and phellandrene (Cahours, Ann., 1842, **41**, 75).

10. At present very expensive.

11. A peculiar, agreeable-smelling colorless liquid, difficultly soluble in water, readily in alcohol and ether. Present in crude spirit, and in imperfectly oxidized alcohol. Acetal is said to be an energetic, direct solvent with the proper boiling-point (104°) for satisfactory volatilization, the cost of production only precluding its extended use.

12. The apparently abnormally high solvent action of certain wood spirits have been traced to large amounts of acetal contained therein.

13. This explosive liquid has been exploited as an efficient solvent for refractory amber and copals. E. Liebert (D.R.P. 51022, 1889) proposes to add it to nitroglycerol to decrease its sensitiveness to shock.

14. A yellowish liquid smelling like nitrous ether; becomes acid on exposure to air.

15. Light oil of wine is obtained in the preparation of ether by distilling alcohol with sulphuric acid. (For composition see Hartwig, J. pr. C., 1881, (2), **23**, 449). Heavy oil of wine, which passes over when the temperature is raised above the

rue, cinnamon, palmarosa, rosemary or erigeron. In patent 269340,[1] by mentioning amyl acetate, Stevens laid the foundation upon which the modern pyroxylin industry has arisen. It was found that the essential oils, while excellent solvents, were too costly for general use, and with the exception of a few, have never passed beyond the experimental stage.

J. Jarvis[2] in extending the latent solvents found dammar, guaiac and mastic useful in the proportion of pyroxylin 100, gum resin 40, with alcohol (wood or grain) 50 parts, adding a small amount of camphor to decrease brittleness, if desired. In conjunction with camphor, O. Amend[3] has obtained protection for the use of amyl chloracetates as a direct solvent,[4] while the next year A. Orr[5] was granted a patent for a liquid which he calls "chloracetate of chloramyl," which appears to be a physical mixture of amyl acetate and chloride.

C. R. Schüpphaus, in behalf of the American Zylonite Company of New York, was granted in 1889 a series of United States Patents embracing latent cellulose nitrate solvents, and comprising[6] propyl and *iso*butyl alcohols,[7] anthraquinone in alcohol,[8] *iso*valeric aldehyde or its derivatives,[9] amylidendimethyl- and amylidendiethyl-ether,[10]

boiling point of ether, consists of ethyl sulphate, mixed with olefines (Claesson, J. pr. C., 1880, (2) **19**, 259; Serullas, Ann. Chim. Phys., 1828, (2), **39**, 152). Both are excellent pyroxylin solvents, but too costly for commercial use.

1. A disclaimer filed Feb. 18, 1896, to U.S.P. 269340, disclaims photographic sensitized solutions, pyroxylin compounds or solutions used pharmaceutically or for surgical purposes, oil of spearmint, methyl nitrate, methyl salicylate, amylic ether, and oils of melissa, birch tar and pennyroyal. Recites E.P. 2359, 1855; 2675, 1864; 3651, 1868; 1603, 2510, 3102, 1869, U.S.P. 105338, 156358. Disclaimer to U.S.P. 269344, filed same day, includes, "any pyroxylin compound other than those used for manufacturing purposes as distinguished from such pyroxylin compounds as sensitized photographic solutions and pyroxylin solutions used for pharmaceutical and surgical purposes." Disclaims use of fusel oil in pyroxylin combinations which are not used for manufacturing purposes, and fusel oil in conjunction with oils of hyssop, tansy, wormseed, cinnamon (light), sassafras, and chamomile; acetal and amyl nitrite and nitrate.

2. U.S.P. 329313, 1885.

3. U.S.P. 371021, 1887; reissue 10879, 1887; chloracetates of amyl include the three chlorine substituted acetic acid esters, i.e., amyl monochloracetate, dichloracetate and trichloracetate. The amyl chloracetates boil at much higher temperatures than amyl acetate.

4. U.S.P. 372100, 1887, O. Amend, comprises amyl chloral, monochlorvaleraldehyde, dichlorvaleraldehyde and amyl chloride. Of the eight known isomeric amyl chlorides, the *iso*chloride boiling at 90.5° is the best known and most readily prepared. It is a feeble direct solvent.

5. E.P. 487, 1888; abst. J.S.C.I., 1889, 8, 204.

6. U.S.P. 410204, 1889.

7. U.S.P. 410205, 1889.

8. U.S.P. 410206, 1889.

9. *Iso*valeric aldehyde (valeral), formed by the oxidation of amyl alcohol, is a neutral oil, with pungent fruity odor, readily polymerizes on keeping, and mixes with alcohol and ether. It boils at 92.5°, and is difficultly soluble in water. Valeral, like acetaldehyde, and the other lower members, does not dissolve the cellulose nitrates directly, but only when in a "mixed solvent."

10. *Iso*amylideneacetonecetic ether, and *iso*amylidene-*m*-amidobenzoic acid are both stated to be direct solvents.

α- or β-naphthol in alcoholic solution [1] glycerol acetate,[2] especially as a base for a pyroxylin plastic printing ink,[3] and palmatin [4] and stearone [5] in alcoholic solution.

As resin lacquer solvents, Lamb and Boyd in 1889 patented the use of combinations of fusel oil and benzene, decreasing the amount of fusel oil to increase the speed of evaporation of the lacquer. The late August Seher followed three years later [6] with a series of ketones as direct solvents, and which included propion,[7] butyron,[8] capron,[9] methylethyl ketone, methylpropyl ketone, methylbutyl ketone,

1. U.S.P. 410207, 1889.

2. U.S.P. 410208, 1889. Glycerol forms a mono-, di-, and tri-acetate, known respectively as monoformin, diformin and triformin. They are heavy oily liquids, resembling in physical appearance glycerol, and like the latter, dry very slowly. This property Schüpphaus proposes to utilize in his process as described in the above patent, for the production of printing inks, which would have as a basis a cellulose nitrate solvent, so that the impression from the press would actually dissolve the superficial pyroxylin coat, and thus form a firm anchorage.

3. U.S.P. 410209, 1889.

4. Glycerol, being a tri-hydric alcohol, can form esters with one, two, or three monovalent acid radicals. Similarly to the three nitroglycerols, or acetoglycerols, combination with palmitic acid, resulting in the formation of mono-, di-, or tri-palmatin is possible. The latter constitutes some of the natural fats. Great pressure is required to cause pyroxylin and the palmatins to dissolve. In U.S.P. 598648, 1898, Schüpphaus records discoveries made with similar bodies, and produced by introducing another acid radical into the acetins and allied substances, whereby the objectionable hygroscopic qualities are absent without serious impairment of the solvent power. When a current of HCl is passed through a mixture of equal volumes of glacial acetic acid and glycerol heated to 100°, acetodichlorhydrin (isomers) is formed, which is saponified and a dichlorhydrin results. Hence the technical product consists of both. Acetochlorhydrin is not hygroscopic and is more particularly valuable in its application in printing inks for pyroxylin surfaces. By introducing the acid radicals of benzoic, oleic and nitric acids into the acetins, it is claimed closely allied glycerol esters of distinct value, are formed. Glycerol monobenzoate (monobenzoin), benzomonoacetin, benzodiacetin, benzochlorhydrin, monoölein (glycerol monoöleate), oleoacetin, oleodiacetin, oleoacetates or acetoöleates of glycerol, dinitromonacetins and mononitrodiacetins are combinations named which appear to be of more or less value.

5. This is a ketone of the same class as acetone. It is di-heptadecyl ketone, an oily liquid, obtained by heating stearic acid to 210°. Its solvent action is only apparent upon pressure.

6. U.S.P. 470451, 1892; J. H. Stevens (U.S.P. 595355, 1897), adds ethylpropyl, ethylpentyl, ethylhexyl, propylbutyl, propylpentyl, propylhexyl and butylpentyl ketones.

7. Diethyl ketone (metacetone) is a mobile oil lighter than water, and very soluble in alcohol and ether. It boils at 101°, smells like acetone, is an excellent pyroxylin solvent, and is present in an impure form in the commercial acetone oils in combination with methylethyl, methylpropyl and dipropyl ketones. As a general solvent, diethylketone is superior to ordinary (dimethyl) acetone.

8. Dipropyl ketone boils at 145°, and di*iso*propyl ketone at 124°. Both resemble acetone in general properties, being superior to the latter on account of lower volatility and less hygroscopicity. A mixture of these two ketones in equal proportions is said to produce a solvent which nearly simulates amyl acetate in physical behavior, and is superior in that it is a much more energetic solvent of resins and essential and fixed oils. Also valerone (dibutyl ketone).

9. Di-*n*-amyl ketone, boiling at 226° and prepared by distilling calcium caproate, is said to be the principal constituent in commercial heavy acetone oil (which see). It is a solid, melting at 15°, but readily soluble in other ketones.

methylamyl ketone, methyl valeral [1] and ethylbutyl ketone. These bodies are contained in the various fractions of commercial "light" and "heavy" "acetone oils," and are excellent solvents of both pyroxylin and resins.[2] The next year Leonard Paget [3] registered five U.S. patents in which he claims the discovery that mixed ethers obtained by the etherification of methyl, ethyl, propyl, butyl and amyl alcohols in the presence of a dehydrating agent as sulphuric acid, result in the formation of direct and indirect solvents of distinct value. Direct solvents are claimed to result when ethyl alcohol in excess is combined with fusel oil, and indirect solvents with butyl and amyl

1. Methylacetone (methylethyl ketone) resembles acetone very closely. It is an agreeable-smelling liquid, boiling at 81° (same temperature as ethyl alcohol). It is superior to acetone as a solvent in every respect, possessing all the desirable properties of the latter, and in addition is less volatile and hygroscopic. A mixture of methylacetone and ethyl alcohol forms a solvent boiling at the same temperature, and much superior to the ether-alcohol combination, the methylacetone allowing of greater attenuation than ether without destroying the solvent effect due to the increasing increment of alcohol. Methylpropyl ketone (ethylacetone), boiling at 102°, is a liquid but slightly soluble in water, methyl*iso*propyl ketone, (dimethyl *l*-acetone, amylene oxide), a liquid boiling at 94°; methylbutyl ketone, and other mixed ketones, are constituents of commercial "acetone oils."

2. In the usual process of manufacture of acetone (U.S.P. 385777, 393079, 1888; 535552, 1895; 608019, 1898; 648389, 1900; 835501, 1906; E.P. 2816, 1898; 25994, 1901; 9936, 1902) the pyroligneous acid consisting of acetic and higher homologous acids is neutralized with milk of lime, the calcium salt dried and subjected to destructive distillation, ketones resulting. When the distillate reaches the neighborhood of 62° (acetone boiling at 56.5°) the receiver is changed, the fraction from that temperature up to about 125° being retained separately as "light acetone oil," and above 125° as "heavy acetone oil." But little has been done in the use of the heavy oil as a pyroxylin solvent on account of difficulty in purification, characteristic pungent odor and low volatility. The lighter oil is a valuable solvent and finds ready market in the lacquer and imitation-leather industries. It is necessary to further purify it before use and this is done by first distilling with a small amount of ferric, cupric, stannous, manganous, nickelous or cobaltous chloride (not calcium or magnesium chlorides), after which is is given a final distillation with sodium thiosulphate, phosphoric acid, acidified oxalic acid, barium peroxide or perborate. Thus prepared it is a colorless limpid liquid, not hygroscopic, difficultly miscible with water, miscible with alcohol, chloroform, ether, fusel oil and amyl acetate, and an excellent solvent for pyroxylin and resins. The "heavy acetone oil" should prove a useful ingredient in solvent paint removers on account of its low volatility and deep penetration. (For full descriptions, manufacture, etc., see P. Baechland, Rev. Chim., Ind., **15**, 133, 240; G. Michaelis and W. Mayer, E.P. 8523, 1885; F. Crane, E.P. 6543, 1892; J.S.C.I., 1898, **17**, 266, 485; 1899, **18**, 292, 405; 1902, **21**, 164, 1271).

3. U.S.P. 494790, 494791, 494792, 494793, 507749, 1893; a mixture of sulphuric acid 25, fusel oil 25, wood alcohol 15, grain alcohol 10 (all parts by weight) are distilled together and the distillate redistilled with 15% of its volume of glacial acetic acid. Or to prepare acceptable mixed ethers, for 25 parts conc. sulphuric acid take (*a*) ethyl alcohol 15, methyl alcohol 10, fusel oil 50; or (*b*) methyl alcohol 25, fusel oil 50 (all parts by weight). The solvency of the latter combination is greater than the former, whereas, as is well known, a mixture of the above named alcohols in the quantities stated would exert little, if any, dissolving effect on pyroxylin. These simple and mixed ethers were found difficult to obtain neutral, and offered but little advantages over amyl alcohol and ether in simple mixture. Moreover if the etherification was not very carefully conducted the same ethers were not always produced in equal amounts, and the solvents resulting lacked in uniformity of action.

alcohols.[1] J. Perl[2] extended this idea of chemical combination of two or more simple solvents, and evolved ethyl aceto-acetate (aceto-acetic ester) to dissolve pyroxylin directly, methylated ether[3] being claimed to possess similar properties. C. Borgmeyer extended the list of active solvents and combinations containing them, by the introduction of certain essential oils as oil of lemongrass,[4] oils of cedar leaf, bitter almonds, rue, pimento,[5] synthetic oil of cassia (cinnamic aldehyde,)[6] Chinese cinnamon, hemlock, wormwood, caraway chaff, savin, cajeput, spruce,[7] sandalwood, cubebs, ginger, bay, clove buds and citronella,[8] synthetic oils of sassafras, red thyme, tansy and peppermint,[9] or a combination of ozonized oils with chloracetates.[10]

G. Zeller in 1894 described a series of indefinite bodies[11] obtained by subjecting an alcohol to the action of an oxidizing agent in the presence of a compound organic acid, combining the aldehyde and acid radical to a series of "aldesters," benzine[12] and hydrochloric

1. In U.S.P. 507749, improvement in the solvent power of weak solvents is claimed by the addition of an ozonizing process by ozone prepared by the electrolysis of air, the ozone being freed from moisture before use. The solvent action of oil of camphor becomes greatly increased, it is claimed, by being sprayed into a chamber containing ozone; oil of turpentine, practically a nonsolvent of pyroxylin, treated with ozone to saturation, becomes an active solvent; oil of caraway seed, which is practically non-drying, although a good pyroxylin solvent, becomes possessed of drying properties upon being ozonized; improvement in solvent power of methyl alcohol, acetone, acetal, ethylamyl ether, fusel oil and camphene is claimed to result when acted upon by ozone.

2. F.P. 233727, 1893, abst. J.S.C.I., 1896, **15**, 729.

3. A physical mixture of methyl alcohol and ethyl (ordinary) ether.

4. U.S.P. 502546, 1893; known scientifically as Oleum andropogan citrati, is a powerful, active solvent of pyroxylin, yielding clear, thin solutions, the drawbacks being slowness of evaporation and cost.

5. U.S.P. 502547, 1893; oil of cedar leaf, being the cheaper, would be preferable.

6. U.S.P. 502921, 1893; an excellent solvent, but of powerful odor and too costly.

7. U.S.P. 503401, 1893; they are not active solvents individually, but only when in combination with ethyl alcohol; oil of caraway chaff is much less expensive than oil of caraway seed (U.S.P. 269344). The alcoholic solutions are all miscible with each other.

8. U.S.P. 503402, 1893; the solvent action of the above named six essential oils is retarded by the addition of fusel oil to any on either of them, while oils of ginger, bay, clove buds and citronella with grain alcohol are active solvents, oil of sandalwood or cubebs with ethyl alcohol has no dissolving effect. Oil of cloves (U.S.P. 269340) separates out from many pyroxylin solutions, while oil of clove buds does not do so, and requires no heat to develop its active solvent power.

9. U.S.P. 504905, 1893; artificial sassafras oil consists mainly of safrol; artificial oil of red thyme of thymol; artificial oil of peppermint by distillation together of Mentha pulegium (European pennyroyal) and Mentha crispa (common curved leaf mint) with lemon peel.

10. U.S.P. 507964, 1893, C. Borgmeyer and L. Paget; to form a lacquer drying evenly at atmospheric temperatures the inventors take amyl acetoacetate 20, ozonized fusel oil 5, wood alcohol 5, benzine 15 (all gal.), and dissolve therein 20 lb. pyroxylin. The amyl acetoacetate may be substituted by one-half amyl acetate, the former combination being preferable.

11. U.S.P. 518386, 518387, 518388, 1894; 555596, 1896.

12. A method of preparation of these bodies would be to take amyl alcohol 4, butyl alcohol 2, acetic and formic acids each 1, and subject this mixture to the

acid [1] being added before distillation. While solvents may be produced in this manner, their composition is so varied that it is difficult to obtain dependable results by their use, and are not employed at the present day. Emile Bronnert, in 1896, experimenting along lines of artificial silk production, obtained satisfactory results with certain nitroderivatives, and patented [2] methylated spirits, nitroglycerol, nitrobenzene, binitrobenzene in alcoholic, ethereal or chloroformic solutions, and nitronaphthalin [3] and benzanilid,[4] priority of discovery of the latent solvent action of the latter two being claimed. Bronnert appears to be the first to endeavor to decrease the well-known inflammability of the usual solvent combinations, using for this purpose an ethyl alcoholic solution of calcium chloride, this combination being but slightly inflammable, not liable to spontaneous combustion or explosion on concussion, and at the same time possessing active direct solvent properties.[5] It should be noted that the ready solubility of calcium chloride in water and its hygroscopic nature would not render a lacquer comprising this combination impervious to moisture or to the gases of the atmosphere. Although Spill described the use of acetaldehyde, R. Strehlenert extended its uses,[6] both alone and combined with ethyl and other alcohols, and Hellberg and Pertsch developed methyl and ethyl chlorides for the same purpose.[7] Upon oxidizing mixtures of the paraffin alcohols, as commercial fusel oil unrectified, with sulphuric acid and chromate,

action of sulphuric acid 2 (all parts by weight), with manganese dioxide 1, separating, neutralizing and redistilling the mixed solvent formed.

1. Benzine 2, is added to above formula before esterification.

2. A mixture of 8 parts ethyl alcohol and 1 part methyl alcohol, but a term now including any combination of ethyl alcohol denatured with methyl alcohol. See U.S.P. 573132.

3. Mononitronaphthalin, a deep yellow crystalline mass, existing in several isomeric forms, is a latent solvent, either in solution, or alone with pressure. The di-, tri- and tetra-nitronaphthalins are said to possess similar latent solvent properties, but their intense yellow color, which increases with the number of nitro groups introduced, is a serious drawback to their use, especially in light-colored combinations.

4. Benzoyl aniline, a crystalline body insoluble in water, but easily soluble in ethyl alcohol, chloroform or ether. It has a melting point of 160° and its solvent action is only active in the liquid state, it is claimed.

5. Other chlorides, bromides, iodides or fluorides of calcium, magnesium, iron, tin, copper, zinc, cobalt, manganese, nickel and some other metals, are soluble in alcohol, non-inflammable, and are efficient in this respect, but like calcium chloride all are soluble in water, and hence not impervious to the atmosphere.

6. Acetaldehyde is a colorless, pungent-smelling liquid, difficultly soluble in water, more soluble in alcohol and ether. It is found in the first portions obtained by rectifying spirit that has been filtered through charcoal, the latter oxidizing the alcohol to aldehyde. This fluid is not a direct solvent, exerting its dissolving power only in combination. The aldehydes of propionic and the higher homologous acids have no commercial importance in this connection. The polymers of acetaldehyde—paraldehyde and metaldehyde—have been used little, if at all.

7. Methyl chloride is a gas at ordinary temperatures, ethyl chloride boiling at 12°. The volatility of either is so great as to preclude their extended use as solvents.

bichromate or permanganate, there results a series of compounds of obscure and varying composition, which, however, are excellent direct pyroxylin solvents.[1] If these alcohols be distilled with a dehydrating agent and benzoic or salicylic acids,[2] methyl-, ethyl-, propyl-, etc., benzoates and salicylates are formed, all of which are active solvents, the lower boiling point members being direct and those of higher molecular weight indirect in their solvent action. They possess the additional advantage of a pleasant and ethereal odor, and would undoubtedly find extensive commercial use if the cost of benzoic or salicylic acids could be lowered to a point where it might favorably compete with acetic acid.

The use of liquid solvents composed of physical mixtures of simple substances has been attended with more or less difficulty, due especially to the varying volatilities, or lack of harmony or chemical incompatibility between the various constituent ingredients of the mixed solvent. This is often apparent in evaporating a thin solution to dryness, where the speed of evaporation varies due to the diversed solvent volatility, there appears considerable variation in surface appearance and homogeneity of the film. J. H. Stevens has sought to overcome this[3] by forming mixed esters of formic acid and adjusting the alcohols, in such proportions that a continuous definite speed of evaporation is possible. In order to approach in other solvents the valuable properties of amyl acetate—its slow volatility and immiscibility with water—this inventor has devised a series of carbonic esters,[4] diethyl and diamyl carbonate being preferred—and they are said to possess the advantage over amyl acetate in being

1. U.S.P. 559823, 1896, J. H. Stevens. A suitable compound may be prepared, according to the inventor, by taking crude fusel oil 2, manganese dioxide 3, sulphuric acid 3, water 2 (all parts by weight), mix, place in a still and carefully fractionate. Dehydrate over calcium chloride and neutralize. For the lower alcohols as methyl or ethyl, a limited oxidation is considered preferable, equal parts of wood, grain and amyl alcohols being distilled with manganese dioxide ½, sulphuric acid ½ and water 1 (parts by weight). The solvents are said to be better adapted for use with amyl acetate and acetone.

2. U.S.P. 559824, 1896; J. H. Stevens combined wood spirit, grain alcohol, crude fusel oil each 4, potassium benzoate 9, sulphuric acid 6 (all parts by weight), which are mixed together and heated for about 30 minutes at 100°, water being then added, when the esters float on top. They are then removed, neutralized, dehydrated and rectified.

3. U.S.P. 561624, 1896; in which methyl and ethyl alcohol and crude fusel oil 1 part each, with potassium formate 3 parts (by weight) are distilled with sulphuric acid 2 parts. Amyl formate is a most excellent direct solvent of pyroxylin, superior in many ways to amyl acetate, two of which are less pronounced and disagreeable odor and lower boiling point, and hence quicker drying properties.

4. U.S.P. 610728, 1898; methyl carbonate is highly volatile, yet practically immiscible with water; the amyl ester is of low volatility, insoluble in water, and of but faint odor. In a pure condition they are stated to be nonsolvents, a small amount of alcohol rendering them active.

nearly odorless. G. Walker [1] has described a process of producing an active solvent both of pyroxylin and resins, by fractionating the tar from hard woods and rectifying the lighter portions. The liquid has a very pronounced odor so that it is used in small amounts only in pyroxylin formulas, but its dissolving property is so great that it is especially useful in combinations where the solvent power is especially low. These solvents are used commercially at the present day.

In 1903 Stevens [2] again added another series of mixed ethers of the paraffin series and obtainable by distilling methyl, ethyl, propyl, butyl and amyl alcohols interchangeably with a dehydrating agent as concentrated sulphuric acid, the products so formed being direct solvents.[3] E. Todd [4] has added to the possible number of useful solvents, and attempted to increase the volume without a corresponding decrease in activity of a given solvent, as amyl acetate, by adding benzine to the fusel oil before acetation, whereby the yield of finished product is increased, and according to the patentee, without serious impairment of the solvent action.[5] Schüpphaus adds [6] methyl*iso*-

1. U.S.P. 604181, 1898; by the term "hard woods" is understood the woods of the leaf-trees—beech, birch, maple, and oak, for example—as distinguished from the needle-trees, such as pine. When the tar of these woods is distilled in a suitable apparatus until one-half of its weight of the tar has been distilled at a temperature of 100° to 250°, the first half of the distillate will consist of pyroligneous acid containing methyl alcohol and an oil lighter than water, together with some oil heavier than water which has been carried over mechanically with the aqueous vapor. This mixture of light oil and pyroligneous acid is separated by settlement and decantation and the acid and a certain portion of creosote which it contains are completely removed from the separated light oil by agitation with caustic alkali, after which the oil is resubmitted to distillation at a temperature ranging from 100–170°, a residue consisting of the oil heavier than water remaining in the still. The distillate so obtained consists of a mixture of oils having boiling points from 65–170° and sp.gr. from 0.860–0.910, the mixture constituting the material of solvent value. When the composition is to be used as a varnish, the proportion of pyroxylin to the oil may be from 3–10% by weight, preferably about 5%. For a plastic composition to be molded into combs, balls, and other articles about 40–60% by weight of pyroxylin may be used. The tar of hard woods above referred to is obtained from the body of the tree or from both body and bark, as distinguished from the bark alone. The odor may be partially masked, and the color—ordinarily light yellow—entirely removed, by distillation with ferric, stannous or cupric chlorides, in from 0.1–0.3% amounts by weight, followed by a final rectification in the presence of a small amount of permanganate and phosphoric acid. This product before final purification is sold in the United States under the name of "solvol" or "light solvol," and in France under the name of "lignone." A "heavy solvol," consisting of a fraction boiling above 170°, is to be obtained, but the difficulties in deodorizing and rectifying it are much greater than with the lower boiling point fraction. 2. U.S.P. 718670, 1903.

3. Covering practically the same ground as the patent of A. Seher.

4. U.S.P. 384005, 1888; 428654, 1890; 450264, 1891; 483701, 1892.

5. To the author's knowledge this method has been repeatedly tried and under varying conditions upon a manufacturing scale, and the same proportion of benzine introduced could always be readily determined in the distillate. Furthermore, the distilled product apparently exerted no greater dissolving power than a simple mixture of amyl acetate and benzine.

6. U.S.P. 741554, 1903; see also U.S.P. 410204, 410205, 410206, 410207, 410208, 410209, 1889.

butyl ether,[1] ethyl*iso*butyl ether,[2] methyl*iso*amyl ether,[3] and ethyl-*iso*amyl ether.[4] These solvents possess the well-known capacity of ether in an ether-alcohol mixture, with a greatly decreased volatility and which are much less miscible with water, hence readily obtained in the anhydrous state. I. Kitsee [5] suggests dissolving the moist cellulose nitrate by exposure to fumes of the solvent, specifically acetic acid.[6] R. Riddle [7] employs an uninflammable solvent directly, phenyl acetate being specified. It, however, is difficult to purify this ester from the phenol usually taken as the source for manufacture. H. Chute [8] fractionates wood spirit, reserves the lower boiling-point portion, esterifies the residue into methyl and ethyl acetates, and mixes with the methyl acetone first reserved. L. Paget,[9] following the idea of Todd, mixes fusel oil (5–8 parts), wood spirit (2–3), and benzine (1–2), dehydrates with calcium chloride and distills with acetic acid, while F. Greening [10] obtains a satisfactory mixed solvent by distilling together ethyl and amyl alcohol with an acetate, laying claim to a higher solvent power than is obtainable by a single mixture of ethyl and amyl acetates. G. Michaelis [11] leads gaseous methyl ether into methyl alcohol, or ethyl ether into ethyl alcohol, or interchangeably a methyl into an ethyl derivative, in the presence of a moderate heat and sulphuric acid, rectifying in the usual manner.[12] [13]

1. A pungent smelling liquid boiling at 59° (under 741 mm. pressure). Methyl-*n*-butyl ether boils at 70°.

2. Can be formed (Norton and Prescott, Am. Chem. J., 1884, **6**, 246), by heating molecular amounts of ethyl and *iso*butyl alcohols. It boils at 78–80°.

3. An ethereal smelling liquid, boiling at 91°. The above three ethers are not direct solvents, resembling in this respect ordinary (diethyl) ether. They are intended to be used in conjunction with an alcohol; those of higher boiling points, with the higher boiling point alcohols separated in fusel oil rectifications.

4. Boils at 112°, and otherwise resembles the above.

5. U.S.P. 767944, 1904.

6. Such an acid compound would be of no value in a lacquer, waterproofing, or artificial silk solution, and would be most applicable in the coating of incandescent gas mantles.

7. U.S.P. 797373, 1905.

8. U.S.P. 845616, 1907; also D. Sutherland and W. McLaren, E.P. 28613, 1896.

9. U.S.P. 494790, 494791, 494792, 494793, 1893; E.P. 7784, 1893. According to the patentee, the liquid is a stronger and more active solvent of both pyroxylin and resins than is a mere mixture of methyl acetate, amyl acetate and benzine. Equally good results, it is claimed, are obtained where ethyl alcohol is substituted for the fusel oil, or benzene or oil of turpetine for the benzine.

10. E.P. 5344, 1889.

11. Phot. Wochenbl., 1896, **22**, 185.

12. The author states that collodion prepared by this solvent is extensively used in America in the manufacture of collodion emulsion paper, and is also recommended for the wet collodion process. The collodion from this methyl alcohol process does not set so rapidly as that prepared with methyl alcohol, it is said, and the plate being coated must therefore be laid in a horizontal position to harden after pouring, otherwise an extremely thin layer will be formed.

13. According to V. Vendar (F.P. 372267, 1906) the cellulose nitrates can be gelatinized by the nitroacetins and nitroformins without the aid of a solvent, and

Cellulose nitrate solutions are either solid, fluid or of an intermediate stage. Where a solid compound results by acting upon the nitrate with a latent solid solvent as camphor, the pyroxylin loses all structural and cellular form and passes into a homogeneous colloidal mass. This solvent disintegration is termed "conversion." A liquid compound may result upon immersion in a suitable solvent, in which state the conversion, although invisible, is nevertheless implied and recognized. This may be experimentally demonstrated by evaporation of the dissolving liquid, leaving a structureless mass, which by no known treatment can be transformed to the physical state preceding conversion. The two terms conversion and solution are therefore synonymously applied to the phenomenon of dissolution of a solid by a liquid. All simple active solvents produce both conversion and solution, that is, a liquid, after having first dissolved a cellulose nitrate, may be indefinitely diluted with the same solvent without throwing the solids out of solution. The solution still continues, irrespective of the attenuation of the solids by continued dilution. There are some essential oils, however, that produce conversion of the pyroxylin, and then throw out their own excess, i.e., no more oil is assimilated than is required for the conversion process, that of solution in the same oil being refused. Both may be induced by mixed solvents (alcohol and ether) neither of which taken separately have dissolving power. There is possible in this instance the phenomenon of dilution of the solution with one of the solvents indefinitely without granulation or appearance of precipitation. Dilution with the alcohol, however, soon reaches an observable limit. In addition to conversion and solution, the factor of dilution enters into consideration in the production of commercial cellulose nitrate mixtures, especially where attenuation is desired. Neither methyl (ordinarily) nor amyl alcohol are solvents of pyroxylin. Statements

this property is made use of for the production of a plastic or a gelatinized explosive. The method of preparation is as follows: Glycerol 100 k. and anhydrous oxalic acid 50 k. are heated together at 140–150° for 20 hours. The product, consisting of 125 k. of a mixture of glycerol and monoformin, is nitrated at 25° with a mixture of 275 k. of strong nitric acid and 90 k. of fuming sulphuric acid containing 25% sulphuric anhydride. The oil which separates is washed with water and a dilute solution of sodium carbonate. It is pale yellow in color, has a sp.gr. of 1.57 and contains 15.7% of nitrogen. This corresponds to a mixture of nitroformin 33%, and nitroglycerol 67%; 100 k. of this mixture will gelatinize from 100 to 400 k. of nitrocellulose, and an explosive of any required degree of plasticity or hardness can thus be obtained. The dinitroacetin compound is obtained in a similar manner to that already described. It has a sp.gr. of 1.45 and contains 12.5% of nitrogen. Gelatinization of nitrocellulose can also be effected by the addition to moist nitrocellulose of a basic acetin soluble in water. If the water is then evaporated, gelatinization of the nitrocellulose takes place, and the resulting plastic mass can be formed into grains or flakes as desired.

appear in the literature where nitrated cellulose has been found soluble in ethyl alcohol and anhydrous ether, but examination of these isolated instances have usually brought out the fact that the products were rather nitrohydrocelluloses, nitrooxycelluloses, or products formed by the nitration of the degraded cellulose molecule, or the purity of the solvents used was open to question. There are isolated solubility anomalies of the cellulose nitrates which are so inexplicable, and results recorded by investigators of unimpeachable veracity so conflicting, that solubility statements of these esters should be accepted with a slight latitude. The author has proven that with a cellulose nitrate of 11.18% nitrogen and entirely insoluble in anhydrous (from metallic sodium) ether, the addition of 1% absolute ethyl alcohol induces 2.6% pyroxylin present to pass into solution, the formula used being 5% by weight of pyroxylin in 100 cc. ether. However, a methyl alcohol containing 5% acetone is a ready solvent, whereas 5% acetone mixed with amyl alcohol, both being equally anhydrous, has no appreciable dissolving effect. Conversely, a pyroxylin solution at the point of precipitation may be indefinitely diluted with amyl alcohol containing 5% amyl acetate without throwing the solids out of solution, whereas the same amount of amyl acetate in a methyl alcohol, acetone-free solution, will soon cause the pyroxylin to be precipitated. If a pyroxylin be dissolved in acetone, the solution may be diluted to any extent with absolute ethyl alcohol without precipitation ensuing, but with anhydrous amyl alcohol antagonistic evidence soon shows itself in a clouding of the mixture. In technical solutions of the cellulose nitrates the solvents are seldom recovered, therefore the limits of safety are usually approached in the various formulas made, on account of the fact that in general, the non-solvents are much less expensive than the solvents. Therefore it is evident that statements of the solubility of a specific cellulose nitrate in mixed solvents only have a distinct significance when the degree of absoluteness of the individual solvents are specified and the proportions in which they are present stated.

Classes of Solvents. The solvents of pyroxylin may be rationally divided into (1) those which dissolve directly without pressure of the application of heat as acetone and amyl acetate; (2) those which require heat or pressure or both as camphor or naphthol, and which are usually spoken of as latent solvents; (3) combinations of two or more bodies, either of which separately exert no solvent action; e.g., alcohol and ether, calcium chloride and ethyl alcohol; and (4) combination of a solvent with undesirable physical properties (hygroscopicity of acetone) with a nonsolvent which will overcome the same (amyl

alcohol) and produce a desirable whole. To the third class, the term indirect solvents has been applied.

Subdividing solvents according to their chemical composition, it will be noted that all the liquids which have stood the test of time are members of the aliphatic (paraffin) series of organic derivatives. Those carbocyclic (benzene) derivatives are, with the possible exception of nitrobenzene, all solids (phenol, dinitrobenzene, coumarin, naphthols, naphthylamines, benzanilid, etc.). The alcohols, ethers, ketones and esters of the hydrocarbons methane, ethane, propane, butane and pentane, comprise all the solvents of practical value. Certain halogen-substituted hydrocarbons (chloroform, carbon-tetrachloride, pentachlorethane, etc.) are useful in connection with the cellulose acetates, but do not dissolve the nitrates.

None of the alcohols or simple or compound ethers in their pure state are solvents. Any simple alcohol mixed with any ether exerts a decided solvent action. The acids are all solvents, the avidity of solution rapidly diminishing with increased molecular weight. Formic acid is an example of the general observation that the first member of a homologous series does not deport itself like the succeeding members, and in this it is no exception to the rule. The acids are enabled to dissolve pyroxylin and to retain it in solution upon dilution with a larger amount of water than any class of compounds, acetic acid being conspicuous in this respect, and holding pyroxylin in solution when as much as 18% water is added. The alkyl esters (methyl, ethyl, propyl, etc., formates, acetates, propionates, etc.) are all active direct solvents, their activity, instability and commercial value and cost of production decreasing with increased molecular weight (from methyl acetate to amyl acetate) of alkyl, and activity, desirability and cost increasing each way from the acetate with the same alkyl. The normal esters are apparently more energetic solvents, normal propyl acetate being a better nitrocellulose solvent than the *iso*acetate, while ethyl *iso*valerate is stated to be more efficient in this respect than ethyl valerate. The formates or propionates, although excellent solvents and which would be used in immense quantities annually, have received only scientific interest on account of cost of the raw material required in their formation. The simple and mixed ethers higher than ordinary sulphuric ether (diethyl oxide) have never been used to any considerable extent. This is not true of the higher ketones, which in their partially purified form enter into commerce as the acetone oils, and find extensive use. No aldehyde with the possible exception of benzaldehyde has gone beyond the experimental stage as a pyroxylin solvent.

Although there is a wide difference between the nature and applications of the liquid and solid compounds, the preferred liquid compounds being of an extremely fluid nature and the desirable solid compounds comparatively hard and dense, in certain limited applications the distinction between the two classes of compounds is not marked. Leaving out of consideration minor distinctions, the fluid compounds are those in which the proportion of fluid is sufficiently large to permit the solution to flow readily from one vessel to another, and without the aid of mechanical means or elevated temperatures. Conversely the solid compounds are those in which the proportion of solvent is so small that the solution will not flow, but appears as a solid, or thick, pasty mass, requiring the aid of rollers or other masticating apparatus, with or without the additional influence of elevated temperatures, to render it capable of being altered in shape, mixed or otherwise manipulated. The latent solvents belong to the general class of pyroxylin plastics, a plastic being a combination with pyroxylin which, after being once solid, may be again softened by means of heat and pressure or both. A cellulose nitrate solution in alcohol and ether when evaporated to dryness cannot be made into a yielding or plastic mass by the application of heat and pressure alone, whereas if camphor in certain proportions be present, after the mass has hardened from evaporation of the solvent, heat and pressure either alone or combined will alter the mass to a readily moldable compound.[1]

The liquid compounds are almost exclusively employed in simple transparent solutions to be spread or flowed upon surfaces, with the result of depositing thin films, as artificial cuticle, for protective coatings for metal, wood or cloth, photographic films, or similar purposes. On the other hand the solid compounds are made in large masses of dense, opaque, homogeneous material, colored and formed to closely imitate natural products, marble, tortoise, ivory, coral and amber. Further, they are so formed and of such a nature as to be readily moldable or otherwise shaped, the plasticity being so complete as to admit of their assuming any configuration. They are

1. Also the plastic compounds comprise those in which the solvents employed give the seasoned or cured product, in addition to the susceptibility of being remolded into any desired shape by simple heat and pressure. The non-plastic compounds comprise those in which the solvents employed give a product susceptible of being molded in blocks or masses, and seasoned or cured, and afterward cut, turned, or carved into any desired form, but not adapted to being remolded. Such plastic compounds generally can of themselves be cut, carved, or turned into sheets or shapes, as desired, as well as the non-plastic compounds; but the converse is not equally true—that is to say, the non-plastic compounds of themselves are not well adapted to being remolded; but it is also proper to state that the non-plastic compounds will become susceptible of being remolded by simply incorporating camphor with them, or employing them in conjunction with camphor.

shaped into sheets, rolled into tubes, rods or wire, or molded into endless shapes and forms. These again, by reason of their peculiar composition and homogeneous solidity, are transformed into jewelry, toilet articles, piano keys, collars and cuffs, etc.

It is not so much the application of mechanical methods or ingeneous processes of mixing which is responsible for the present comparative state of perfection of this manufacture, but, as has been stated, in common with the liquid compounds, the progress of the art has depended largely upon the discovery and application of new liquid or solid solvents, or menstrua commercially valuable.

There is a wide difference between the action and applicability of the liquid and solid solvents.[1] The former, being fluid, which, whenever used with pyroxylin, dissolve in and render the compound fluid according to the proportion employed and other conditions, are not dependent upon artificial heat, while the solid solvents of pyroxylin are only useful at elevated temperatures, solid compounds resulting irrespective of the proportion of either pyroxylin or solvent present. This confines this class of solvents, when used alone, to solid pyroxylin compounds, and as these compounds usually soften again upon the application of heat, to pyroxylin plastic compounds. With solid solvents like camphor, when combined with pyroxylin, the former loses its distinguishing characteristics as a solvent in proportion as the liquids are increased in amount, although it still retains sufficient of its peculiar nature to markedly modify the nature of the compound by its presence. J. H. Stevens, the patentee of amyl acetate, has discovered[2] that some solvents are so different in their nature from camphor that even this property disappears, and unless they are combined with camphor, their usefulness is exclusively confined to the solid compounds—or at least, whatever there is of utility in applying them to this manufacture manifests itself so differently in the various compounds as to make a broad distinction between their application to liquids, as distinguished from solid compounds. That is, liquid solvents are generally useful in all compounds of pyroxylin, some solvents are more especially adapted to liquid than to solid compounds, while bodies like camphor, which are more or less in universal application, are almost exclusively confined to the solid

1. As an example of the peculiarity of solvents, it may be mentioned that the addition of the maximum of methyl or ethyl alcohol, and evaporation of the solution to dryness, produces a white film. Upon removal of moisture from the air by refrigeration until the humidity but slightly clouds the film, the addition then of a small amount of camphor will clear it up at once. See J. H. Stevens, U.S.P. 269343, 1882. The observations of three dissimilar solvents acting simultaneously, are of interest to a too limited number to admit of insertion here.

2. U.S.P. 517987, 1894.

modifications. Hence the action of liquid solvents is more apparent and simple, while the discovery and application of solid solvents—the manifestations of which are only apparent under peculiar conditions and by the results which they produce—are more difficult to interpret.

It follows, therefore, that the number of known solid solvents is fewer than the liquid ones, whose simple action has tended to render their discovery comparatively easy, although doubtless, as in the case of camphor, solvents of great practical utility have been employed in pyroxylin solutions for the production of definite effects, but in such a manner that their maximum usefulness was masked, insufficiently developed, or in such a way that their usefulness had an inadequate opportunity for sufficiently instructive demonstration, and what might have proved valuable inventions, if followed up by a proper course of experimentation, have been lost to the art. Some of the previously enumerated solvents, having proved disappointing to their discoverers or patentees, may be simply awaiting fuller development, and in this possibility the value of their enumeration herein lies.

The simple use of a substance in connection with pyroxylin, or the mere discovery that certain menstrua will dissolve pyroxylin, does not necessarily involve the availability of such menstrua as useful solvents in the production of pyroxylin compounds, for some materials which dissolve in or combine with pyroxylin solutions, but their presence adds no new or useful feature, and therefore they may be regarded as harmless diluents, unless they are actually detrimental—when the solutions, of course, are better for their absence. Hence the mere discovery of solvent properties of a substance may be insufficient to convey any instructive idea to the art, and it is only after a practical illustration of its utility such as to enable the user to say that it is a useful solvent, that its applicability is proven beyond the necessity for further experiment. Thus while the use of ether and alcohol as the menstrua for the fluid compounds know as surgical and photographic collodion is perfectly practicable, it is well known that numerous attempts to utilize ether and alcohol in the production of solid compounds were attended by a large waste of capital and results so discouraging that these solvents were abandoned as inapplicable to such manufacture, or, at least, unprofitable to use by reason of the uncertain character of the result. In regard to solid solvents the same holds true, but to a greater extent, and the mere fact that the presence of a solid substance in liquid compounds results beneficially is no demonstration that it would also be useful in a solid

compound, although the converse might be true. Thus, Cutting, in 1854, added camphor to ether-alcohol collodion to obtain effects beneficial in the evaporated solution when applied to photographic purposes, but without the slightest intimation that camphor was to be the substance which, through the later experiments of Parkes and Hyatt, was demonstrated to be of extraordinary utility in manufacturing solid compounds; and which, as a result of Hyatt's discovery of its individual solvent powers when heated, became the foundation of the present method of manufacturing solid nitrocellulose compounds that has resulted in such a remarkable commercial and financial success.

The fact that a solid body is a solvent of pyroxylin when melted by heat so distinguishes it from all other substances, solid or liquid, that a proposed use of any such body in making solid compounds should invariably be based upon a knowledge of its solvent powers, or such description as would enable the operator in the art to use it understandingly. Nor does a simple description of the usefulness of a solid body in connection with liquid solvents, even in the manufacture of the solid compound, convey a sufficiently clear and exact idea of its usefulness alone, such as would enable the operator, without experimenting, to employ in it connections where its individual solvent powers would be demonstrated; for there are bodies soluble in pyroxylin solvents which, while enhancing the solvent action, exhibit a power to dissolve pyroxylin only when combined with other solvents, and when used alone are utterly valueless.

Solvents may be appropriately divided into two classes, according to their physical deportment upon evaporation, as to whether they are hygroscopic or do not absorb water on drying. To the first class belong those bodies of comparatively low boiling point and high speed of evaporation, the ready volatility inducing the dew point in the atmosphere in immediate contact with the evaporating surface, whereby moisture is precipitated, and the solvent takes on a milky appearance due to the precipitation of the dissolved cellulose nitrate from excess of water present. To the first class belong methyl and ethyl formates, acetone, ether, methyl, and ethyl acetates—all liquids of comparatively low boiling point and ready inflammability. Although the cloudiness is usually superficial and may be temporary, it sometimes permeates the entire film.

An ideal solvent would be a colorless, neutral, uninflammable and non-hygroscopic liquid, unaffected by light and air; a direct solvent of both pyroxylin and resins, and the solvent power not seriously attenuated by the presence of other solvents; miscible in

all proportions with benzine, benzene, ethyl and amyl alcohols and acetates, but insoluble in water, that it may readily be obtained anhydrous; of specific gravity less than one for ease in transportation; boiling above 100° but under 150°, thus not too quick drying for lacquers, nor too slow for rapid commercial work; free from acrid, disagreeable or poisonous fumes upon evaporation, and not prone to leave a residue of a characteristic or readily detected smell.

Laying aside the question of cost, certain solvents may be inadmissible for technical use on account of some peculiar physical property, as odor (nitrobenzene, phenol), toxicity of vapor when inhaled (amyl nitrite), explosibility of vapor (ethyl nitrate, methyl nitrate), too low (methyl or ethyl chloride), or too high boiling-point (phenyl acetate, nitrobenzene), or too slow evaporation (the nitrotoluols). The latter property of slow evaporation is of great importance in the commercial application of pyroxylin lacquers, the element of time in coating a given area being of great importance where large amounts are used continually.

Lastly, and of most importance, is the division due to cost of production, and this is the factor which really determines the value of a product for industrial use. If the cost of production be prohibitive, its application must of necessity be limited. The essential oils generally, vanillin, coumarin, and chloral; formates, propionates, butyrates, benzoates, salicylates, and oxalates of radicals forming fluid compounds; the higher boiling ethers, acetal, acetaldehyde, amyl and ethyl nitrites and nitrates all would be included in this catagory of solvents. What may be termed the individual or selective action of a solvent is quite remarkable. As is well known, camphor, added to the nonsolvent alcohol, produces a liquid of high dissolving power, while, on the other hand, camphor added to acetone and the ketones in general, diminish their solvent capacity, and it is possible to so mix acetone and alcohol that the addition of camphor, naphthols or naphthylamines will not affect the solubility, irrespective of the amount of the latter which may be added. The granular appearance of a solution of pyroxylin in nitrobenzene may be entirely removed by the addition of a small amount of camphor, as also the opacity of an ethyl acetate solution when evaporating to dryness.

It is intended to emphasize in the foregoing paragraphs that a thorough, practical experience in the manipulation of cellulose nitrate and acetate solvents is an essential to success in the arts embraced within this work, and to the recognition and development of that intimate and specific knowledge—more than to any other single

factor—is to be attributed the high degree of skill which these industries have attained at the present day.

Acetone (dimethyl ketone), is a colorless limpid liquid of peculiar but pleasant ethereal odor and burning taste. It is miscible in all proportions with water, alcohol, ether, amyl alcohol and amyl acetate, dissolves copal, shellac, dammar, sandarac, elemi and mastic readily, and is an excellent solvent for a wide range of cellulose nitrates and hydrocellulose acetates. The pyrocelluloses or explosive cellulose nitrates which are insoluble in ether-alcohol often entirely dissolve in acetone, while any pyroxylin which is soluble in ether-alcohol, will dissolve in acetone with facility. Acetone solutions of the same pyroxylin have a greater fluidity than if amyl acetate is the solvent. Although pyroxylins have been described as being soluble in methyl alcohols, the solubility of this ester in commercial methyl alcohol is due to the presence of small amounts of acetone present as a normal impurity. Perhaps the most important property of this solvent in connection with the cellulose nitrates is its power to increase the dissolving power of inert or comparatively weak solvents, specifically methyl and ethyl alcohols. However, acetone added to the paraffin alcohols decreases their solvent action for shellac and copal, but not for mastic. The value of acetone as a pyroxylin and resin solvent is in direct proportion to its freedom from moisture and amount of higher ketones present, the latter aiding materially in the ease of solution and the desirable characteristics of the resulting combination. The low boiling point (56.5°) ofthis ketone and its pronounced hygroscopicity are the two drawbacks to its use alone, for with pyroxylins the film is formed so rapidly as to be wrinkled and distorted, while the amount of moisture absorbed during the evaporation to dryness is usually sufficient to precipitate out the pyroxylin in a white friable form, practically worthless for technical uses. For this reason acetone is seldom, if ever, employed alone, usually entering into formulas containing higher boiling pyroxylin solvents. It is a very quickly penetrating and active solvent, and a small amount added to a refractory formula is often sufficient to cause the ingredients to readily unite, even when the ketone is present in such small amount as to exert no appreciable difference in the speed of evaporation of the finished preparation. Acetone, therefore, finds its greatest use as an adjunct to other and higher-boiling solvents, to increase their efficiency and speed of penetration; to accelerate the dissolving power of feeble solvents, or to produce a solvent combination with a nonsolvent; and to impart desirable properties to pyroxylin solutions which are on the verge of granulation or precipitation from the introduction

of an excess of nonsolvent, usually benzine. Acetone and amyl alcohol form an excellent nitrocellulose solvent, but this has no commercial value, for upon evaporation of such a solution to dryness, the acetone is first dissipated, leaving the nitrocellulose to be precipitated out by means of the slower-evaporating, nonsolvent amyl alcohol.

Ether (diethyl oxide) often called sulphuric ether from the fact that sulphuric acid is used in its manufacture from ethyl alcohol, formed together with alcohol probably the first solvent used to dissolve a cellulose nitrate. At the present day it is used in immense quantities in combination as a solvent in the preparation of nitrocellulose containing artificial filaments and photographic films. The higher nitrated celluloses used for military purposes are insoluble in ether-alcohol, this solvent mixture being used to determine their purity (i.e., absence of lower nitrates). The literature contains many statements of the solubility of cellulose nitrates in ether, but the author has never been able to dissolve a pyroxylin in ether free from alcohol. The lower nitrated celluloses gelatinize, but attempts to filter such a gelatinized mass does not give a filtrate with a nitrogen-containing residue. As is well known, ether containing as small amount as 2% of alcohol appreciably dissolves pyroxylin, and as alcohol is the usual impurity in commercial ether, from which it is entirely removed only with difficulty, all statements of the solvent action of ether on the cellulose nitrates, in the writer's judgment, should at least be accepted with some mental reservation. The phenomenon of two nonsolvents, alcohol and ether, combining to a pyroxylin solvent is not an isolated instance, aqueous calcium chloride and alcohol, aniline and ether, phenol and ethyl alcohol, furnishing additional instances of two non-solvents uniting to a fluid of solvent action. The hygroscopicity and low boiling point (35°) would preclude its use as a simple solvent, even if energetic. The cellulose acetates are insoluble in ether.

Glacial Acetic Acid is a term applied by the various Pharmacopœias to acetic acid of at least 98% strength. Such an acid is miscible in all proportions with alcohol, ether, chloroform, amyl acetate, amyl alcohol and acetone, and is miscible with an equal weight of fresh oil of lemon without turbidity. Acetic acid is the only fluid which will dissolve gelatin, glue, casein, and the cellulose nitrates and acetates, and through this solvent the many practical processes for combining these products with each other have been based. No liquid approaches acetic acid in the amount of water which may be added to it and still preserve its pyroxylin solvent power, it being

possible to add 12–13% of water directly to absolute acetic acid and still have an efficient solvent. In practice, as in the preparation of acetic collodions, the pyroxylin is first dissolved in concentrated acid, when the requisite amount of water is added gradually by means of 25–35% aqueous acetic acid. The viscosity of the solution increases with increased addition of water, although with the same cellulose nitrate, acetic acid gives a lesser fluidity than ether-alcohol, acetone, amyl acetate or mixtures of them. Acetic acid solutions of cellulose nitrate or acetate clarify easily and filter readily. It has been stated that a small amount of acetyl chloride added to glacial acetic increases its efficiency as a pyroxylin solvent.

Nitrobenzene, known commercially as nitrobenzol and oil of Mirbane, was first prepared by Mitscherlich in 1834 by the action of fuming nitric acid on benzene. The commercial manufacture is very simple, it being only necessary to act upon benzene with the molecular quantity of nitric acid in the presence of some energetic dehydrating agent, sulphuric acid being most efficient. One or more of the hydrogen atoms of the benzene are replaced by the nitro group, and where the reaction is arrested at the proper time, nearly pure nitrobenzene results. The oily layer which floats on the top is decanted, neutralized, and separated from water by direct distillation.

Nitrobenzene is an oily liquid, usually colorless, of specific gravity 1.20, boils at 210°, solidifies at 3° in long needles and is practically insoluble in water. It has a distinctive and powerful odor somewhat resembling oil of bitter almonds (benzaldehyde) and inhalation of the vapor is poisonous. It possesses a sweet, burning taste and is uninflammable. Its principal technical use is in the preparation of aniline and the production of magenta. "Light nitrobenzol," consisting of the pure compound, and "heavy nitrobenzol," comprising admixture with dinitrobenzenes and nitrotoluenes are the two products used in the aniline dyestuff industries. Formerly nitrobenzene was quite extensively used as a pyroxylin solvent on account of its immediate and penetrative action. It has been reported as possessing the property of inducing granulation without entirely dissolving the cellulose nitrate. On account of its odor—disagreeable to many—its very slow evaporation, and the poisonous nature of its vapors, it has gradually fallen into disuse until at the present time it finds but a restricted application as a vehicle for masking the smell of intended secret pyroxylin lacquer formulas, for which it is very effectual.

Wolff and Foerster[1] have invented a process for waterproofing

1. D.R.P. 23808, 1883.

guncotton consisting in dipping the granules in nitrobenzene which, acting upon the cellulose nitrate, hermetically surrounds it with a moisture-repellent skin.

Cellulose Nitrate Nonsolvents. In addition to those already stated, benzene and homologues, toluene and xylene, and the petroleum naphthas[1] comprise the nonsolvents of practical use. The interest in water as a nonsolvent lies in the assurance of its absence. The paraffin alcohols, methyl, ethyl, fusel oil and amyl, have a value in addition to their nonsolvent action, contributing valuable properties to solutions, as viscosity and regulation of the speed of drying or ease in filtration or clarification. Furthermore in any formula in which resins enter, methyl, ethyl and amyl alcohols are important ingredients from their solvent action on the resins. Benzine of 62° Bé.[2] is the most widely used petroleum naphtha on account of its freedom from moisture and low cost, and the fact that it readily evaporates without residue. It should not discolor concentrated sulphuric acid darker than a light straw color. In all technical pyroxylin solutions the limit of benzine is introduced in order to cheapen as far as possible the formula. Benzine is the cheapest fluid entering into a pyroxylin formula. One drawback to the use of benzine was found in the fact that it refuses to unite or mix with methyl or ethyl alcohols, although they be quite anhydrous. As the result of research on the part of J. H. Stevens there was formulated a principle[3] now known as Stevens' Law, which is to the effect that methyl or ethyl alcohol will always unite with petroleum naphtha "when brought in contact with any volatile liquid which is soluble in alcohol, but insoluble in water." Examples of such liquids are fusel oil, amyl alcohol, acetal, amylic ether, amyl nitrate, any of the amyl ethers, chloroform, carbon tetrachloride, tetrachlorethane, ethylidene chloride, methyl salicylate, ether, ethyl benzoate or oils of sassafras, wintergreen, birch or cassia. This discovery was of great importance, as it

1. For manufacture, properties, applications and methods of storing and transporting commercial benzine, see M. Rakusin, Caoutchouc et Gutta-percha, 1908, **5**, 2504.

2. Benzine 71° Bé. has a sp.gr. 0.6985, and weighs 5.80 lb. per U.S. gal., while 62° Bé. has a sp.gr. 0.729 and weighs 6.07 lb. per gal. In preparing coating compositions—and these are usually sold by weight—the heavier 62° Bé. benzine is of importance, as it costs several times less than the composition is sold for. For detection of benzene in alcohol by diazotizing, and combining with α-naphthol to an orange azo color, see G. Halphen, J. Pharm. Chim., 1900, **11**, 373. According to Barboni (F.P. 350313, 1904) a non-inflammable benzine may be prepared by acting with nascent chlorine, in the presence of iodine and carbon bisulphide upon benzine, then distilling over sulphur, washed with water, decanted, treated with 5% NaOH, dried over calcium chloride and filtered. For another process see Börner and Huss, F.P. 359044, 1905.

3. U.S.P. 478543, 1892.

enabled commercial wood alcohol to be used with benzine in the production of cheap and at the same time satisfactory liquid mixtures containing pyroxylin.[1]

Chloroform (trichlormethane) is a nonsolvent of cellulose nitrates, but dissolves the cellulose acetates with facility, and together with acetylene tetrachloride, has been, until recently, the two most important solvents for these acetic esters. This liquid possesses remarkable solvent properties, dissolving camphor, sulphur, phosphorus, a number of resins and a large range of organic bodies. Chloroform is preserved from the decomposing action of air and light by the addition of 0.5–1% ethyl alcohol, and additions of alcohol up to 10% are said to have no effect on its solvent power for the acetylcelluloses. Pure chloroform is not combustible, but when mixed with alcohol burns with a green-edged, smoky flame. It is always technically anhydrous, being capable of dissolving but 0.44 gm. water per 100 cc. at 20°, has a sp.gr. of 1.50 at 15°/15°, boils at 62°, and is miscible with alcohol, acetone, amyl acetate, amyl alcohol, ether, benzine, benzene, and fixed and volatile oils.

Carbon Tetrachloride, like chloroform, is a pyroxylin nonsolvent, uninflammable, an excellent resin[2] and camphor solvent, but, unlike chloroform, does not dissolve the cellulose acetates. It is

1. In making a varnish or lacquer which will dry to a hard brilliant film, Stevens recommends as a harmonious mixture, commercial wood alcohol 32, fusel oil 7, benzine 7, camphor 2.5, pyroxylin 2 (all parts by weight). Also wood alcohol 12, benzine 12, fusel oil 5; or wood alcohol 12, benzine 12, ether 3 (all parts by volume).

2. L. Andés, Chem. Rev. Fett- u. Harz-Ind., 1905, **12**, 157, has made experiments to determine the solubility of the raw materials used in the manufacture of varnish in carbon tetrachloride with the following results: Insoluble (but dissolving on the addition of a relatively small amount of alcohol or turpentine oil); yellow acaroid resin, gum benzoin, soft (so-called "spirit-soluble") and hard Manila copal, gum mastic, sandarac, shellac, celluloid, and agate shellac partially soluble or swollen: calcium resinate, fused lead and manganese resinates, the former dissolving completely on the addition of turpentine oil, whilst the latter does not. Finely powdered Manila copal also swells up in the solvent. Soluble, Syrian asphaltum (and probably other varieties of asphaltum), Brazil copal (small fragments swell up without dissolving), Dammar resin (turbid solution becoming clear on the addition of 95% alcohol), gallipot, colophony, larch turpentine, fused Zanzibar copal and amber gumlac. Shellac is soluble in a mixture of 70 parts by weight of carbon tetrachloride and 30 parts of 25% alcohol, whilst sandarac and mastic dissolve in mixtures of 80–90% of carbon tetrachloride with 20–10% of spirit. It is thus possible to prepare two distinct types of varnishes according to the proportion of carbon tetrachloride used, viz., ordinary brush varnishes, which are thin, transparent and flow easily, and varnishes for dipping or pouring, which, owing to the volatility of the carbon tetrachloride, cannot be applied by means of a brush, but give a very brilliant coating when applied in other ways. Varnishes containing fatty drying oils can also be prepared by means of carbon tetrachloride, and the addition of as little as 10% of this to the solvent makes the varnish transparent and to flow well from the brush. If larger proportions are used the product can only be employed as a "dipping" varnish. A brilliant black enamel varnish for small iron articles can be prepared from asphaltum by means of carbon tetrachloride, while copals give colorless varnishes.

used in many formulas to decrease the inflammability of solvents. In the G. Dilette and J. Talabot process,[1] when added to the following substances in the proportions given, non-inflammable mixtures are said to result; benzene or mineral oils, about 15%; alcohol or oil of turpentine, about 50%. In the J. Ducruet method[2] 25–30% added to benzene is said to render it absolutely uninflammable and incombustible. The density of carbon tetrachloride is 1.6, it boils at 76°, has a vapor density of 5.3, and a latent heat of evaporation of 51 cal. as compared with 90 cal. for benzine.[3] For use in turpentine substitutes see Chapter VIII.[4]

The Chlor-Ethanes, of which six are possible and all known, increase in boiling point from ethyl chloride (12.5°), used mainly as a refrigerant local anesthetic, to hexachlorethane, which is a crystalline mass of camphor-like odor, melting at 187–188°. Some of these bodies are assuming considerable commercial importance on account of their low volatility, non-inflammability and excellent solvent power. Vinyl trichloride (β-trichlorethane, $CHCl_2 \cdot CH_2Cl$), and ethenyl trichloride (α-trichlorethane, $CCl_3 \cdot CH_3$), better known as methyl chloroform, with b. pts. of 114° and 74.5° respectively, have not received as much attention as the tetra- and penta-chlor derivatives, the most important being *sym*-tetrachlorethane (acetylene tetrachloride, vitran, $CHCl_2 \cdot CHCl_2$) which is an excellent solvent for a wide range of cellulose acetates, and in the hands of Lederer did much to bring forward the possibilities of the use of cellulose acetates in solution. Tetrachlorethane is not a distinctive name on account of existing in two isomeric forms, acetylidene tetrachloride ($CCl_3 \cdot CH_2Cl$) boiling at 129–130°.

Acetylene tetrachloride is a colorless, ethereal-smelling liquid, of sp.gr. 1.614, at 0°, boiling at 147° corr. It will thus be seen that this chloride has a boiling point not far from that of *iso*amyl acetate (138°) and it stands in much the same relation to cellulose acetate as does amyl acetate to cellulose nitrate. It is an excellent solvent for shellac, dammar, sandarac, elemi, the softer copals, camphor, sulphur, phosphorus and many fixed and volatile oils. Readily miscible with alcohol, ether, chloroform, amyl alcohol, amyl acetate and carbon tetrachloride; soluble less than 1% in water at 15° and not affected by boiling water. The slight volatility and high boiling point renders recovery after use a matter of simple distilla-

1. F.P. 341927, 1904.
2. F.P. 341158, 1904.
3. See Chem. Trade J., 1906, 264; J. Danziger, U.S.P. 791970, 1905.
4. For a simple method of preparing tetranitromethane, see F. Chattaway, Chem. Soc. Proc., 1910, **26**, 164.

tion. In the chemical industries it is extensively used to purify substances through recrystallization, is uninflammable and imparts this property to combustible fluids when present in comparatively small amounts. It has strong bactericidal action, and is an effective disinfectant. Acetylene tetrachloride dissolves the lower cellulose acetates more readily than the esters of higher acetation, and possesses the peculiar property of imparting plasticity to the acetates when present in amounts varying from 7–15%. The uninflammable plastic of Lederer, largely used for continuous photographic films, is cellulose acetate rendered plastic by the introduction of acetylene tetrachloride.[1] As yet, the uses of pentachlorethane have been confined to solvent extraction. Acetylene tetrabromide (Muthmann's Liquid) is used in microscopy, and for separating minerals by sp.gr.

Phenyl Acetate may be obtained[2] by heating phenyl phosphate with potassium acetate and alcohol, by boiling phenol either with acetamide,[3] or by heating with lead acetate and carbon bisulphide to 170°.[4] It may perhaps, be best prepared[5] by heating 400 gm. phenol in a flask with return condenser and fitted with a separatory funnel. The phenol is heated to 80°, and then 332 gm. acetyl chloride gradually introduced by means of the funnel. The mixture is neutralized with dilute alkali, fractionated from the water and is then ready for use. Thus prepared it is an agreeable, ethereal liquid, usually smelling strongly of phenol, from which it is eliminated with difficulty, boils at 193–195°[6,7], has a sp.gr. of 1.0927 at 15°/15°,[8] not readily miscible with water, but dissolves in all proportions in methyl, ethyl or amyl alcohols or acetates, ether, chlorform and carbon tetrachloride. It dissolves pyroxylin readily to a clear, transparent solution, usually tinged reddish from phenol, and this makes it unsuitable for use in transparent lacquers. The odor of phenol, which clings with great tenacity, is also objectionable. Up to the present, no method of production on a large scale has been proposed which will admit of its extensive use. It evaporates too slowly to be very

1. For excellent article on "Chloro-derivatives of Ethane and Ethylene," see L. Clement and C. Rivière, Caoutchouc et Gutta-percha, 1910, **7**, 4021. For method of manufacture, see Paskenasy and M. Mugdan, U.S.P. 804516, 1905; H. Precht, U.S.P. 817188, 1906. For "Physical and Physiological Properties," see V. Veley, Proc. Roy. Soc., 1910, **82**, 217. For solubility of cellulose nitrate in the chlorhydrins, see Flemming, Must. Z., 1897, **46**, 313; Griesheim-Elektron, D.R.P. 204883; Aust P. 35666, 1909; D.R.P. 154657; Aust. P. 21614, 1905.
2. Scrugham, Ann., 1854, **92**, 317.
3. Guareschi, Ann., 1874, **171**, 142.
4. Broughton, Ann., Supp., **4**, 121.
5. Cahours, Ann., 1854, **92**, 316; Riddle, U.S.P. 797373.
6. Hodgkinson and Perkin, J.C.S., 1880, **37**, 181.
7. Kreysler, Ber., 1885, **18**, 1716.
8. Ormdorff, Am. Chem. J., 1888, **10**, 370.

extensively employed, unless in connection with the manufacture of solid compounds analogous to celluloid. The adhesion on glass of a phenyl acetate solution of pyroxylin is good; there is no tendency to wrinkle or peel, or to absorb atmospheric moisture. It is a ready solvent for copal, dammar, sandarac and the resins in general, a rather unusual property for a solvent of cellulose nitrate. Phenyl acetate is uninflammable. It is not recorded that the corresponding tolyl and xylyl derivatives have as yet been employed technically. Benzyl acetate would be too costly.

CHAPTER V

FUSEL OIL AND THE AMYL ALCOHOLS

History. The history of these alcohols commences with the discovery of fusel oil in 1785. In that year [1] Scheele noticed that in the rectification of common brandy made from rye, after the major portion of the ethyl alcohol had passed over, the distillate became turbid, took on an offensive odor, and contained what he termed "fusel oil." Pellatan [2] next examined a similar product obtained from potato brandy, but as he found therein spirit of wine, he came to the conclusion that it was a compound in composition between the latter substance and an ethereal oil. Dumas in afterwards investigating the same subject, observed that a considerable quantity of a liquid may be separated by careful fractional distillation, boiling at 131.5° and represented by the chemical formula $C_5H_{11}O$, from which an analogy with the alcohols and ethers might with propriety be assumed. However, he afterwards considered it more rational to regard it as a substance more analogous to camphor or the essential oils.[3] Some years afterwards in investigating its chemical properties, Cahours [4] came to the conclusion that the substance is isomeric with wood or grain alcohol, and gave to the compound the name "amyl alcohol" because it had been found chiefly in spirit obtained by fermenting starch (amylum).[5] The investigations of Dumas [6] and Stas [7] confirmed this view, but Balard [8] went a step further and proved that it occurs in the fusel oil formed in the fermentation of grape skins. Since that time the amyl alcohols have been found as normal constituents in all fusel oils.[9]

1. Crell. Ann., 1785, **1**, 61.
2. Ann. Chim. Phys., 1825, (2), **30**, 221; J. chim. med., **1**, 76.
3. Ann. Chim. Phys., 1834, (2), **56**, 314; Ann., 1835, **13**, 80; Dumas and Stas, Ann. Chim. Phys., 1840, (2), **73**, 128; Ann., 1840, **35**, 143.
4. Ann. Chim. Phys., 1839, (2), **70**, 81; Ann., 1839, **30**, 288.
5. See Pierre, Jahrsb., 1847–1848, 60, 66; Kopp, Ibid, 86; Person, Ibid, 91.
6. Ann., 1838, **27**, 164; Riekher, Ann., 1847, **64**, 336.
7. l. c.
8. Ann. Chim. Phys., 1844, (3), **12**, 294; Ann., 1842, **42**, 111. See also Reynolds, J. Pharm., 1849, (3), **16**, 339; Chem. Soc. Quar. J., **3**, 111; Ann., 1851, **77**, 114; Schlossberger, Ann., 1850, **73**, 212; Favre and Silbermann, Ann. Chim. Phys., 1853, (3), **37**, 461; Ann., 1853, **88**, 163.
9. Kolbe, Ann., 1842, **41**, 53; Wurtz, Ann. Chim. Phys., 1854, (3), **42**, 129; and Perrot, have examined the ethers and fatty acids of fusel oil.

For a long time amyl alcohol was considered to be composed of but one compound, Biot being the first to call attention to the fact that this body possesses the power of rotating the plane of polarized light to the left.[1] It remained for Pasteur to show in 1855 that the rotatory powers of specific samples of amyl alcohol vary according to the sources from which they are obtained. From this fact, he concluded that the body known heretofore as amyl alcohol, is a mixture of varying proportions of an optically active and an optically inactive body, both being represented by the same chemical formula and percentage composition.[2] These two substances were regarded as physical isomerides until Pedlar,[3] by investigating their products of oxida-

1. It is a unique property (for an alcohol) to rotate the plane of a polarized ray of light to the left.

2. In order to separate these two bodies, Pasteur dissolved the mixed alcohols in concentrated sulphuric acid, and neutralized with barium carbonate, thus forming the two barium amyl sulphates. It was found that the one derived from the inactive alcohol (*iso*butyl carbinol) was 2.5 times less soluble in water than the other (from methyl ethyl carbinol), so that they could be separated in a state of high purity by repeated crystallization. He next converted them into the corresponding sodium salts by precipitation of the barium amyl sulphates with sodium carbonate, and by distilling the respective sodium salt with sulphuric or phosphoric acid, the two modifications of the alcohol were obtained. (C. R., 1855, **41**, 296; Ann., **96**, 255). A more complete separation of the alcohols is reached by conducting gaseous HCl into the mixture. *Iso*butyl carbinol will be etherified first, the inactive amyl alcohol remaining (Le Bel, Ann., 1883, **220**, 119). Upon oxidation, the first yields inactive, and the second, active valeric acid. More recently, Markwald (Ber., 1901, **34**, 479) alone and with McKenzie (Ber., 1901, **34**, 485) has investigated the amyl alcohols, and effected their separation by preparing the acid esters of several substituted phthalic acids, but usually found that the derivatives of the two alcohols were isomorphous and yielded mixed crystals. The acid finally selected as most convenient was nitrophthalic acid, 1:2:3. This yields two series of acid esters differing in the 1: or 2: position of the amyl residue, according to conditions. By boiling 3 parts amyl alcohol with 1 part of the acid, and 3 parts sulphuric acid for seven hours, the the *l*-amyl acid nitrophthalates were the main products. From the products of esterification of commercial fusel oil there was comparatively little difficulty in obtaining the inactive *iso*amyl derivative in the pure state. After repeated crystallizations from carbon tetrachloride and benzene, it melted constantly at 95°. For the preparation of the optically active isomeride, the authors started from a product obtained from fusel oil after a preliminary treatment by a modification of Le Bel's method. Calculating upon the greater velocity of esterification of the inactive alcohol when treated with gaseous HCl, they compute that Le Bel probably prepared a final product containing about 95% of the active alcohol. The original product, containing about 62% active alcohol, was converted into the *l*-amyl acid nitrophthalic esters and the optically active ester separated after an elaborate series of fractional crystallizations from benzene. The third method of separating the two alcohols of fusel oil, that of Rogers, is a modification of the Le Bel process in which the mixed alcohols are heated in closed vessels with highly concentrated hydrochloric acid. From 16 l. fusel oil, Rogers obtained 250 cc. of a product containing 88.5% of the active alcohol, after five operations. Markwald claims that active amyl alcohol differs in odor from the inactive isomer, and does not produce the characteristic choking sensation, although the narcotic effect appears to be more powerful. Another method of separation consists in oxidizing to the corresponding valeric acids, and forming the barium, quinine or strychnine salts. The salts derived from oxidation of the optically active alcohol are gummy, while those from the inactive alcohol are crystalline.

3. Ann., 1868, **147**, 248; J.C.S., 1868, **21**, 74.

tion rendered it probable that they do not possess an identical chemical constitution. This conclusion has since been repeatedly verified.[1]

Occurrence of Fusel Oil. Those substances formed in the fermented wash liquor or mash as a result of fermentation, and which constitute the higher boiling portion or last runnings of ordinary alcohol distillation, are known collectively under the name of fusel oil.[2] This liquid is not a definite substance, but of widely varying composition from different sources, and from the same source under different conditions. The composition of this complex mixture is governed by the nature of the raw materials operated upon, and the manner and length of the fermentative processes. With the exception of a few rare, and probably doubtful instances, fusel oil or the amyl alcohols have not been found uncombined in nature outside the various fermentative processes.

Composition of Fusel Oil. As an approximate expression of the average composition of fusel oil, there is present one or more amyl alcohols, with varying amounts of the lower homologous alcohols, traces of acids and a considerable amount of water. Potato fusel oil usually consists almost entirely of amyl alcohols, with but a small proportion of ethyl. In some samples of fusel oil, butyl alcohol is found, in fact it was in rectifying a sample of this fusel oil that Wurtz[3] discovered butyl alcohol, and later[4] in the fusel oil from molasses. In the last runnings of the brandy distilled from the marc from grapes, Chancel[5] detected propyl alcohol, and from a portion of the same alcohol less volatile than amyl, Faget[6] obtained a liquid which he considered to be a hexyl alcohol. Rowney[7] found in fusel oil from the Scotch distilleries, water, ethyl and amyl alcohols, and a colorless, water-insoluble residue, containing capric acid and its amyl ester (amyl caprate). Wetherill[8] found in neutral fusel oil obtained as a residue in the preparation of grain alcohol, partly from maize and partly from wheat, acetic and caprylic acids, together with (less distinctly indi-

1. Cf. Perrot, Ann., 1858, **105**, 64; Mulder, Pogg. Ann., 1837, **41**, 582; Berzelius J., **23**, 456; Gaultier Claubry, Ann., 1842, **44**, 127; Rowney, Jahrsb., 1852, 499; 1851, 442; Wurtz, Ann., 1853, **85**, 197.

2. There have been reported (H. Briem, Organ des Central Ver. f. Rubenzucker Ind. Oest. Ung. Monarchie, 1877, 180) instances of fusel oils being found free or nearly free from amyl alcohol. R. Schüpphaus (J.A.C.S., 1892, **14**, 49) calls attention to one such case (Wag. Jahrsb., 1875, 1882), which upon consultation of the original article (A. Freund, J. pr. C., N.F., 1875, **12**, 25) referred to a fusel oil distillate. The writer has examined large shipments of fusel oil imported into the United States, which were entirely soluble without turbidity in an equal volume of distilled water at the room temperature, and which, therefore, must have been nearly free from amyl alcohols.

3. C.R., 1852, **35**, 310; Ann., 1855, **93**, 107. 4. Ann., 1855, **93**, 107.
5. C.R., 1853, **37**, 410. 6. C.R., 1837, **4**, 730.
7. Quar. J.C.S., **4**, 372; Jahrsb., 1851, 422; 1852, 449.
8. Chem. Gaz., 1853, **10**, 251.

cated) formic, caproic and enanthic acids, also ethyl and amyl, but no butyl alcohol. Fehling[1] in the fusel oil from beet molasses, found capric and caprylic acids and neutral fats. When examined by Perrot[2], fusel oil from beet sugar molasses gave a portion which distilled between 80–110°, and contained ethyl, butyl and amyl alcohols without any propyl. The liquid remaining after the amyl alcohol had been distilled, passed over between 110–300°. It consisted chiefly of compound ethers.[3] Capric acid[4] has been found in potato fusel oil,[5] while in that from rum, Surinam[6] obtained palmitic and enanthic acids and enanthic ether (ethyl enanthate),[7] while Rowney[8] found *iso*amyl decoate.

Ordinary potato fusel oil consists primarily of *iso*amyl alcohol,[9] that obtained from grain[10] being quite similar in composition.[11] The nature of the fusel oil produced depends upon the class of the fermenting organism. For instance, with Mycoderma cerevisiæ (beer yeast) there is formed *iso*butyl and *iso*amyl alcohols, while with Mycoderma ellipsoideus (wine yeast) aromatic smelling normal amyl alcohol results.[12]

1. Jour. Pharm., 1854, (3), **25**, 74. 2. C.R., 1858, **45**, 309.
3. See A. Müller, J. pr. C., 1849, **46**, 108; Jahrsb., 1851, 498.
4. W. Markwald (Ber., 1902, **35**, 1595; 1904, **37**, 1038) has examined several of the fusel oils of commerce, and finds the relative proportions of inactive *iso*amyl and active amyl alcohols in them to vary greatly according to the raw material from which the oils were obtained. Four or five samples of each kind were examined, and it was found that the amyl alcoholic portions of grain and potato fusel oil contained as much as 48–58%; the latter material is therefore the best starting point for the preparation of pure active amyl alcohol. Markwald, however, was not positive as to whether the differences were due to variation in raw material or to methods of manufacture. For capric acid derivatives in wine fusel oil from Hungary see Grimm, Ann., 1871, **157**, 264.
5. R. C. Schüpphaus, J.A.C.S., 1892, **14**, 45, has given a résumé of the history and development of fusel oil and the contained alcohols. Cf. S. W. Johnston, J.pr.C., 1854, **62**, 262; Faget, C.R., 1853, **37**, 730; Wetherill, Chem. Gaz., 1853, **10**, 281.
6. Jahrsb., 1858, 302; also A. Fischer, Ann., 1861, **118**, 307.
7. Russian potato fusel oil has been thoroughly investigated by Th. Rüdakoff and A. Alexandroff (Chem. Zeit., 1904, **28**, 187), in which they found 2.7% *n*-propyl, 9.8% isobutyl, and 87.4% fermentation amyl alcohols, with but little hexyl alcohol, acetaldehyde and furfurol. The presence of alcohols higher than the amyl series must not be regarded as established with certainty, Perrot (C.R., 1857, **45**, 309); Clandon and Moran (C.R., 1887, **104**, 1187); and Morin (C.R., 1887, **105**, 1019), all being unable to definitely locate a hexyl or heptyl alcohol.
8. J.C.S., 1852, **4**, 372. 9. Ann., 1835, **13**, 80.
10. Golbe, Ann., 1842, **41**, 58; Mülder, Berz. Jahrsb., **23**, 456.
11. Wetherill, Jahrsb., 1853, 441.
12. Defuselation of alcohol. As fusel oil imparts to alcohol a very unpleasant odor and possesses a toxicity greater than ethyl alcohol, it becomes a matter of considerable importance to remove as much as possible traces of fusel oil from potato spirits. This is a matter of no small difficulty, and is seldom attained on a practical scale by distillation alone, although a great discrepancy between the boiling points of ethyl and amyl alcohols exist. Careful and slow rectification with column stills reduces materially the amount of fusel oil which may pass over, but filtration through animal charcoal or wood charcoal from beech or birch wood manifests itself in a peculiar manner in the apparently selective influence which it exerts on amyl alcohol. To effect this defuselation with the minimum of charcoal,

Wyschnegradsky [1] concludes from his investigations that normal and *iso*amyl alcohol and methylethyl carbinol are the three amyl alcohols present, the latter member having been independently reported by Bemont.[2] Rabuteau [3] obtained from one liter of potato fusel oil the following proportions of various alcohols [4]:

*Iso*propyl alcohol	150 cc.
Propyl alcohol	30
*Iso*butyl alcohol	50
Normal butyl alcohol	65
Methylpropyl carbinol	60
*Iso*amyl alcohol	275
Products boiling above 132° and retaining amyl alcohol	170
Water	125
Ethyl alcohol, aldehyde and ethyl acetate	75

the spirit may be caused to slowly percolate through a tall layer of the charcoal, previously broken into pieces about the size of a pea. Treatment in the cold is seldom resorted to, mainly on account of the unavoidable loss of spirit from being mechanically held in the charcoal. The usual procedure is to add the charcoal to the spirit in the rectifying apparatus, where it is subjected to the influence of the former at an elevated temperature, and by which the maximum absorptive power of the charcoal may be taken advantage of. Another method is to pass the vapor of the spirit through a column of charcoal, the latter being heated to a temperature which will not cause the liquefaction of the gaseous distillate. Those processes which have to do with the addition of various chemical agents to destroy the fusel oil in the alcohol, in the main, have been ineffective. Peters (Dingl. Polyt., 1848, **108**, 79) prefers to add powdered manganese dioxide with the charcoal, while slaked lime (Hourier, ibid., 1847, **141**, 68); soap lye (Xalhau, ibid., 1846, **100**, 80); zinc chloride, ibid., 1860, **158**, 378); calcium chloride (Stein, ibid., 1824, **13**, 429); and CuO (Gnop. Pharm. Centrahl., 1847, 617), are among other chemicals suggested. Grote and Pinnetta (D.R.P. 41678, 1887) have patented a process for freeing spirit of fusel oil, by adding an ignited mixture of sodium or potassium nitrate to the liquid before distillation, from 45–60 grams per 100 liters being used. This is said to retard the distillation of the fusel oil. The author's experience corroborates this retardation, which may extend to an extent where the stills will refuse to distill over, due to the formation of a thin deposit of nitrate on the sides of the still, which deposit acts as an efficient insulator between the steam in the still jacket and the spirit in the still. The action of charcoal is also applied to carbonizing the inside of the barrels in which the spirits are stored, this carbonization, it is held, aiding in the production and development of those ethers and esters to which the peculiar aroma (bouquet) is due.

1. Ann., 1878, **190**, 365. For isolation of amyl alcohol from fusel oil see Beckmann and Brüggemann, Z. Genuss., 1899, **2**, 709.

2. J.S.C.I., 1902, **21**, 182.

3. C.R., 1878, **87**, 501; J.C.S., 1879, **36**, 36; cf. Ordonneau, Bull. Soc. Chim., 1886, **45**, 333.

4. Schüpphaus (l.c.) has cited the work of Berthelot (l.c.), Friedel (l.c.), Mendeleff, (Zeit. f. Chem., 1868, **4**, 25), Chancel (C.R., 1853, **37**, 410), Pierre and Puchot (Ann. Chim. Phys., 1868, (4), **22**, 234), Kraemer and Pinner (Ber., 1869, **2**, 401; 1870, **3**, 75), and Perrot (C.R., 1857, **45**, 309), in support of the statement that other investigators have failed to find the *iso*propyl alcohol claimed by Rabuteau to have been found in fusel oil.

Karl Windisch [1] gives the following as the composition of one kilo (water and ethyl alcohol free) fusel oil from potatoes:

Normal butyl alcohol	68.54 gm.
*Iso*butyl alcohol	243.50
Amyl alcohols	678.60
Free fatty acids	0.11
Fatty acid ester	0.20
Furfurol and bases	0.05

In 100 parts free acids and acid esters from the same source there was obtained:

Capric acid	36 parts
Pelargonic acid	12
Caprylic acid	32
Caproic acid	14
Butyric acid	0.5
Acetic acid	3.5

1. Morin (C.R., 1887, **105**, 1019) distilled 29 l. genuine cognac made in 1883 from Charente Inferieure wine in the Claudin-Morin apparatus. The last fraction being the fusel oil portion after dehydration with potassium carbonate weighed 352 gm., and consisted of water, 7; ethyl alcohol, 130; normal propyl alcohol, 25; *iso*butyl alcohol, 25; amyl alcohol, 175; furfurol, 2; and wine oils, 7 gm. The water contained acetic and butyric acids, together with a small amount of *iso*butyl alcohol, and apparently glycerol. The residue consisted of tannin and the residues extracted from the wood. In the following table, Column 1 gives the percentage of the compounds in 100 liters of the cognac, while Column 2 states the compounds obtained in the same manner from the fermentation of 100 kilos of sugar:

	(1)	(2)
Aldehyde	traces	traces
Ethyl alcohol	50,837.0 gm.	50,615.0 gm.
Normal propyl alcohol	27.17	2.0
*Iso*butyl alcohol	6.52	1.5
Amyl alcohol	190.21	51.0
Furfurol bases	2.19	....

A. Kailian (Monatsh., 1903, (7), **24**, 533) has examined several samples of fusel oil, including commercial amyl alcohol free from pyridine, and amyl alcohols from molasses spirit, corn spirit and potato spirit, in order to test the accuracy of a statement by Bemont (J.S.C.I., 1902, **21**, 182) that fusel oil consists mainly of methylethylcarbincarbinol, which, on account of its low optical rotation, must be present as a mixture of the dextro and laevo modifications. After determining the physical characters of the different samples, they were converted into the corresponding valeric acids, then into their silver salts, which were separated by fractional crystallizations. The fusel oil from molasses spirit in this manner was found to contain about 50% of *iso*propylcarbincarbinol, while all the other samples of fusel oil contained over 75% of this alcohol. The balance in each case was made up of *l*-methylethylcarbincarbinol, the dextro modification being absent. Kailian found that the proportions of the two constituents calculated from the solubilities of the various fractions of the silver salts, confirm the approximate validity of Markwald's law, that the proportion of active amyl alcohol (*l*-methylethylcarbincarbinol) in fusel oil may be calculated from the rotatory power. See also Kailian Essig-ind., 1904, **8**, 325.

In 1 kilo corn fusel[1] oil there was found:

Normal propyl alcohol	36.90 gm.
*Iso*butyl alcohol	157.60
Amyl alcohols	758.50
Hexyl alcohol	1.33
Free fatty acids	1.60
Fatty acid esters	3.05
Terpenes	0.33
Terpene hydrate	0.48
Furfurol, heptyl alcohol and bases	0.21

The free acids and acid esters in 100 parts by weight of corn fusel oil contain:

	Free Fatty Acids.	Fatty Acid Esters.
Capric acid	44.1	40.7
Caprylic acid	26.7	34.8
Caproic acid	13.2	9.6
Butyric acid	0.4	0.4
Pelargonic acid	12.9	14.2
Acetic acid	2.7	0.3

Kruis and Rayman[2] find in potato fusel oil the following constituents by weight:

Ethyl alcohol	48.88
Normal propyl alcohol	0.85
*Iso*butyl alcohol	4.19
Amyl alcohol	942.42
Hexyl alcohol	0.19
Caprylic acid ethyl ester (ethyl caprate)	0.26
Caprylic acid amyl ester (amyl caprate)	1.00
Capric acid	0.66
Residue undetermined	1.45

Long and Linebargin[3] have examined fusel oil from American distilleries, who chiefly use corn and other raw grain. It had a sp.gr. of 0.810 at 20°, and when dehydrated and separated by fractional distillation there passed over from one liter, as follows: 80–90°, 17 cc.; 90–95°, 8 cc.; 95–105°, 30 cc.; 105–115°, 55 cc.; 115–120°, 95 cc.; 120–125°, 240 cc.; 125–130°, 515 cc.; 130–135°, 25 cc., and a small

1. Le Bel found 0.2. cc. (C.R., 1883, **96**, 19, 1368) as the average amount of fusel oil in natural white wines, and finds that pure sugar fermented with beer yeast yields less of these alcohols than wine or beer. See Le Bel., Bull. Soc. Chim., 1879, **31**, 104.

2. L.c.

3. J. Analyt. Chem., 1890, **4**, 4.

residue. A careful examination of these fractions showed that active and inactive amyl alcohol were the most important constituents, next in importance being *iso*butyl, *iso*propyl and ethyl alcohols. Traces of normal propyl and butyl alcohols are said to have been found. Haitinger [1] and Bamberger and Einhorn [2] have called attention to the presence of pyridine and 2:5-dimethylpyridine and their homologues in rectified fusel oil, used in toxicological and alkaloidal analysis.[3] [4] [5] According to Thorpe's "Dictionary of Chemistry," **2**, 169, the following list shows the alcohols which have, or are said to have been separated from fusel oil: ethyl, *n*-propyl, *iso*propyl, *n*-butyl, *iso*butyl, tertiary butyl, active amyl, inactive amyl, methyl-*n*-propylcarbinol, *n*-primary amyl, a primary hexyl and a primary heptyl alcohol.

Methyl Alcohol, although not a constituent of fusel oil, in its commercial form is extensively used as a cellulose nitrate solvent, due to the small amounts of acetone which it always contains. Being an excellent solvent of castor and blown cottonseed oils, it finds extensive use in the preparation of coating compositions for the manufacture of artificial leather, but always in conjunction with higher boiling and less volatile liquids. As a solvent for shellac, dammar and the majority of other varnish resins, it is far inferior to ethyl or propyl alcohols. It is immiscible with benzine or benzene, but may be made to unite in the presence of amyl alcohol. Acetone-free methyl alcohol

1. Chem. Zeit., 1882, **6**, 961.

2. Ber., 1897, **30**, 224. Schrötter (Ber., 1879, **12**, 1431) has also described a base found in fusel oil. See Beehmann, J. dist., 1902, **19**, 300.

3. Richmond and Goodson (A., 1905, **30**, 77) have reported the presence of petroleum in an alcohol owing to the use of petroleum casks for the packing of the alcohol. The authors state that as much as 4% of petroleum has been recorded as found. This in a barrel of average capacity (15 gallons) would equal two gallons, an amount entirely too high to be the result of accident. According to M. Prud'homme (Rev. Mat. Col., 1900, (4), **43**, 209), a slightly alkaline solution of magenta at the ordinary temperature imparts a red color to amyl alcohol containing valeric acid, and gives a pink color to the same alcohol if sodium valerate be present. The valeric acid present must be very small, for experiment demonstrated that 0.5% valeric acid imparts to fusel oil its distinct and characteristic odor, exceedingly difficult to mask. S. F. Burford (J.S.C.I., 1905, **24**, 391) reports distilling commercial amyl alcohol which gave abnormal results in milk analysis and obtained therefrom a high boiling point fraction (above 145°) possessing a distinct and putrid cheesy odor.

4. For fusel oil from madder root see Jeanjeau, Ann., 1857, **101**, 94.

5. Asboth (J.S.C.I., 1889, **8**, 734) has examined a number of specimens of amyl alcohol as solvents for picric acid, and they were found to yield yellow crystals of what proved to be pyridine picrate. Hungarian amyl alcohol was found to be free from pyridine, and this is considered by the author to be due to the fact that in Hungary the spirit is distilled by steam (Bohm-Fredersdorf or Ilges method employed), while in many parts of Germany from which the samples containing pyridine were obtained, Dorn's or the Pistorius apparatus was used. In these the flames come in direct contact with the boiler containing the alcohol, and any insoluble matter originally present might be partially carbonized, thus giving rise to pyridine and quinoline bases. Pyridine picrate melts at 144.5°, and is difficultly soluble in water.

is a non-solvent of the industrial cellulose nitrates. It is an open question as to whether it dissolves the lower nitrates, the so-called "friable collodions." Using methyl alcohol obtained from methyl oxalate, the author in the examination of commercial pyroxylins covering a period of several years and embracing over a hundred samples, has been unable to obtain a nitrogen-containing extractive upon Soxhlet extraction. While in some instances gelatinization apparently resulted, a nitrogen-containing filtrate was not obtained. Wood spirit (wood naphtha, pyroxylic spirit) names which are applied to the impure methyl alcohol of commerce, is an excellent solvent for the cellulose nitrates, due to the presence of methyl formate and acetate, acetone, dimethylacetal, allyl alcohol, acetaldehyde, etc., but is seldom if ever used, on account of the presence of free acids and a very penetrative and disagreeable smell. The "tailings" containing furfurol, methylethyl ketone, allyl acetate, etc., is even a better solvent than the wood spirit, although the odor clings tenaciously and is removable with difficulty.

Ethyl Alcohol is present in improperly rectified fusel oil. Anhydrous alcohol is a solvent of the lower cellulose nitrates, its solvent power rapidly decreasing with the addition of water, so that 95% alcohol is practically a non-solvent of all cellulose nitrates. Alcohol is miscible with chloroform, amyl alcohol and acetate, carbon tetrachloride, acetylene tetrachloride and ether; an excellent solvent of shellac, copal, dammar, elemi, sandarac and vegetable oils. Like methyl alcohol it is immiscible with benzine and benzene, but may be brought together by the presence of amyl alcohol. Denatured alcohol is treated in Chapter XXI. The physical constants, properties and reactions other than outlined above, are readily obtainable in the literature.

Normal Propyl Alcohol was first discovered in the fusel oil from wine by Chancel;[1] and later by Kramer,[2] who obtained it in large amounts in the raw spirit in corn fusel oil, boiling at 96–100°. The fusel oil operated upon consisted approximately of 30% each water and *iso*butyl alcohol, 20% ethyl alcohol, and the remaining 20% mostly propyl alcohol.[3] Propyl alcohol is formed in small amounts in the fermentation of glycerol by the Bacillus butylicus,[4] and may be conveniently prepared in a pure state in the laboratory by treatment of the interaction products between trioxymethylene, zinc dust and

1. Jahrsb., 1853, 508; Ann., 1869, **151**, 298.
2. Ber., 1870, **3**, 75.
3. See also Fittig, Zeit. f. Chem., 1868, **4**, 41; Pierre and Puchot, Ann., 1872, **163**, 265.
4. Fitz, Ber., 1880, **13**, 1311; Morin, Bull. Soc. Chim., 1887, **48**, 803.

water,[1] or by distilling zinc dust with oil of vitriol and water.[2] Thus prepared, and freed from traces of water, this alcohol is a strongly smelling liquid, burning with a bright, blue flame. It boils at 97.1°,[3] has a specific gravity of 0.8044 at 20°/4° [4] and 0.8177 at 0°/4° [5] and is miscible with water in all proportions without turbidity. This last property is of considerable moment in connection with the manufacture of commercial amyl acetate from crude fusel oil, a large portion of the propyl alcohol coming over in the aqueous portion of the first distillate, where it is difficult to separate and reclaim from the aqueous layer. Failure to properly recognize and make allowance for this fact may appreciably lower the yield of acetate as calculated from the original fusel oil used.[6] According to Traube,[7] the specific gravity of aqueous propyl alcohol is as follows: At 20°/4° and containing 10% alcohol, 0.9840; 30%, 0.9510; 50%, 0.9541; 55%, 0.8995; 70%, 0.8697; 100%, 0.8051.[8] Propyl is distinguished from ethyl alcohol by its insolubility in a cold saturated calcium chloride solution, Göttig, in his investigation of the compound [9] having first obtained it as a by-product when drying commercial propyl alcohol with calcium chloride.[10] Primary propyl alcohol is not used as such in the arts[11] or manufactures, but according to some observers may be present in commercial fusel

1. Tischtschenko, J.A.C.S., 1897, **19**, 483.
2. Gustavson, J.pr.C., 1887, (2), **36**, 301.
3. At 752.4 mm., R. Schiff, Ann., **220**, 101.
4. Brühl, Ann., 1883, **203**, 268.
5. Zander, Ann., 1884, **224**, 79.
6. Martin, Spellbury and Emerson have proposed a process (E.P. 158, 1862) for manufacturing propyl alcohol, which consists in passing steam and fusel oil vapor through red-hot tubes, and condensing the propyl alcohol in a water cooled worm attached to the other end.
7. Ber., 1886, **19**, 881.
8. It will thus be seen that the specific gravity is a criterion of strength where the alcohol exists in a comparatively pure state.
9. Ber., 1890, **23**, 181.
10. Although Chancel in 1853 (C.R., 1854, **38**, 410; Ann., 1853, **87**, 127) showed that normal propyl alcohol was contained in the fusel oil resulting from the manufacture of wine brandy, he apparently did not fully investigate it. Mendeleff (Zeit. Chem. 1868, (2), **4**, 25), who in 1867 examined a sample of the same fusel oil, did not succeed in separating propyl alcohol from it, and Tromsdorff (Tagblatt, Frankf. Naturf., 1867, 62) was equally unsuccessful. All attempts to obtain it synthetically also proved abortive (Butlerow, Zeit. Chem., 1867, (2), **3**, 680). Shortly afterward Fittig, (Zeit. Chem., 1868, (2), **4**, 44) succeeded in recognizing this primary alcohol in fusel oil. At the same time Schorlemmer (Proc. Roy. Soc., 1832, **1**, 29) prepared it from propane, and Linneman by the reduction of propionic aldehyde (Ann., 1868, **148**, 251). Since that time the existence of considerable amounts of propyl alcohol has been recognized and its properties more carefully examnied (Pierre and Puchot, C.R., 1868, **66**, 302; 1870, **70**, 354; Bull. Soc. Chim., 1870, (2), **14**, 58; Chancel, Ann., 1869, **151**, 298; C.R., 1869, **68**, 659; Chapman and Smith, J.C.S., 1869, **22**, 193).

This alcohol is found, together with ethyl and butyl alcohols, in the acid liquors of starch manufacture, and also accompanies lactic and butyric fermentations (Bouchardat, C.R., 1874, **78** 1145).

11. E.P. 10112, 1894.

oil up to 70%. Its derivatives are prepared in a manner similar to those of ethyl alcohol, which they closely resemble.

***Iso*propyl or Secondary Propyl Alcohol,** $CH_3.CH(OH).CH_3$, was first obtained by Berthelot [1] in 1855, by combining propylene with sulphuric acid, and distilling with water. At that time no isomeric alcohols being known, it was assumed this alcohol was identical with that first obtained from fusel oil. In 1862 [2] Berthelot prepared it from acetone, and later in the year, Kolbe [3] recognized this body as the first representative of a class of secondary alcohols predicted by him. Propyl alcohol may be prepared in the pure state in the laboratory by distilling glycerol with excess of fuming hydriodic acid with addition of red phosphorus.[4] It is a rather pleasant-smelling liquid, boils at about 82°, and has a specific gravity of 0.7876 at 16°/15°, and 0.7887 at 20°/4°.[5] A characteristic of this alcohol is its benzoic ester (*iso*propyl benzoate), which upon distillation is entirely decomposed into propylene and benzoic acid. Propyl alcohol mixes readily with ethyl and amyl alcohols and acetates, forms a crystalline compound with calcium chloride, is a non-solvent of cellulose nitrates and acetates, an excellent solvent for camphor and its substitutes, and dissolves shellac and the softer resins to a clear, transparent solution. The specific gravity of aqueous *iso*propyl alcohol according to Traube [6] is as follows: 5% alcohol, sp.gr. at 15°, 0.9934; 10%, 0.9868; 18.2%, 0.9787; 30%, 0.9605; 40%, 0.9477; 50%, 0.9054; 100%, 0.7970. This alcohol is miscible in water in all proportions. When the aqueous solution is distilled on the water bath, the hydrate, $(C_3H_7OH)_3.2H_2O$ is formed according to Linneman,[7] who obtained a monohydrate upon treatment with potassium hydrate, although Erlenmeyr [8] and Thorpe [9] dispute this formation.

Normal Butyl Alcohol has been more often found in fusel oil fermented with impure yeast,[10] and hence with modern methods of ferment control and the use of pure cultures, it is of more infrequent occurrence. Emmerling failed to detect this alcohol in commercial fusel oil from potatoes, but found small quantities of it in a corn fusel oil distillery in Westphalia. The fusel oil was fractionated in a small column apparatus, the suitable fraction converted into the corresponding iodide, and this into the acetate and back into the alcohol. In

1. Ann. Chim.-Phys., 1855, (3), **13**, 399; Ann., 1855, **94**, 78.
2. Rep. Chim. Pure, **4**, 351; Ann., 1862, **124**, 324.
3. Zeit. Chem., 1862, **5**, 627.
4. Maxwell Simpson, Proc. Roy. Soc., 1863, **12**, 533.
5. Brühl, Ann., 1880, **203**, 12.
6. Ber., 1885, **18**, 882; also Pribram, Handl. Monats., **2**, 667.
7. Ann., 1865, **136**, 10.
8. Ann., 1863, **126**, 307.
9. J.C.S., 1897, **71**, 920.
10. Emmerling, Ber., 1902, **35**, (3), 694.

this manner 2.5 gm. of normal butyl alcohol was obtained from 10 k. fusel oil, the alcohol boiling at 116.°

Obviously, this is no suitable source for the preparation of this body, which may be more readily manufactured by the fermentation of glycerol, brought about by the presence of various fission fungi (Schizomycetes).[1] The yield averages 6–8%, so that the high price charged for this alcohol appears unwarrantable.[2]

Pure normal butyl alcohol is a highly refractive, and somewhat oily liquid, possessing a peculiar smell which readily excites coughing. It boils at 116°[3] has a sp.gr. of 0.8239 at 0°/4°[4], and dissolves in 12 parts of water at room temperature, from which solution it is precipitated by the addition of calcium chloride.[5]

***Iso*butyl Alcohol** and the preceding alcohol are the only members of the four possible and known isomeric butyl alcohols which have been detected in fusel oils from various sources. This body occurs principally in potato fusel oil, and is known as the butyl alcohol of fermentation. The discoverer, Wurtz,[6] obtained it in large quantities from beetroot fusel oil, although its isolation from this source, involving as it does tedious distillation, is seldom carried out. Probably the best method[7] is to subject the fusel oil obtained in the rectification of mangel-wurzel molasses to fractional distillation, the portions which distill at 85°–105,° 105°–115°, 115°–125° being collected separately. The first fraction is washed with water, and the oily layer repeatedly rectified, the fraction passing over at 104°, being each time set aside. This is then boiled for 4 hours with concentrated caustic potash solution in a flask with return condenser, distilled, dehydrated with lime, and finally rectified. Thus prepared it is nearly anhydrous and quite pure, and is a transparent, colorless liquid, more mobile than the amyl alcohols, and having an odor similar to the latter, but less pungent and more vinous.[8] It dissolves in 10.8 parts of water at 18°[9], the larger portion of the alcohol being separated from the solution upon the addition of calcium chloride, or alkaline carbonates and phosphates. With calcium chloride a crystalline compound, and with zinc chloride a syrupy liquid is formed. The b. pt., is 108.4°, and sp.gr. 0.8106 at 0°, and 0.8003 at 18°[10]. At 15° the specific gravity of the aqueous

1. Ber., 1883, **16**, 1438; 1896, **29**, 72.
2. Fitz, Ber., 1877, **10**, 278, reports finding normal butyl alcohol in potato spirit.
3. Under 740 mm. pressure, Lieben and Rossi, Ann., 1871, **158**, 137.
4. Fitz, l.c. 5. Le Bel and Greene, Am. Chem. J., 1880, **2**, 24.
6. Ann. Chim. Phys., (3), **42**, 129.
7. C.R., **35**, 210; Ann., 1855, **93**, 107.
8. The odor is said to strongly resemble that of the ordinary syringa (Philadelphus coronarius).
9. Traube, Ber., 1886, **19**, 883. 10. Linneman, Ann., 1871, **160**, 238.

solution is for 2.5% alcohol, 0.9950; 5%, 0.9930; 6%, 0.9915; 10%, 0.9875.[1]

The commercial application of *iso*butyl alcohol is confined to the manufacture of Musk-Baur and other artificial musks, which are mainly trinitro derivatives of butyl toluene and butyl xylene, and may be prepared by nitrating the condensation product of molecular proportions of *iso*butyl alcohol with toluene or xylene.[2]

Amyl Alcohols.[3] There are eight alcohols of the general formula $C_5H_{11}OH$, as indicated in the subjoined table:

Name.	Formula.	B.-Pt.
1. Normal Amyl Alcohol.	$CH_3.[CH_2]_3CH_2.OH$	137°
2. *Iso*butyl Carbinol.	$(CH_3)_2.CHCH_2.CH_2OH$	131.4°
3. Active Amyl Alcohol.	$CH_3.\overset{CH_3}{\underset{CH_2}{}}>\overset{*}{C}H.CH_2OH$	128.7°
4. Tertiary Butyl Carbinol	$(CH_3)_3C.CH_2OH$	102°
5. Diethyl Carbinol.	$(CH_3.CH_2)_2CH.OH$	116°
6. Methyl *n*-propylcarbinol.	$CH_3.CH_2.\overset{CH_3}{\underset{CH_2}{}}>\overset{*}{C}H.OH$	118.5°
7. Methyl*iso*propylcarbinol.	$(CH_3)_2.\overset{CH_3}{\underset{CH}{}}>\overset{*}{C}H.OH$	112.5°
8. Dimethylethylcarbinol	$CH_3.\overset{(CH_3)_2}{\underset{CH_2}{}}>C.OH$	102.5°

In writing the formulas for the possible alcohols, it will be found that there are 4 primary, 3 secondary and 1 tertiary amyl alcohol, theoretically indicated. However, 3 of them have an asymmetric carbon atom and can exist in an inactive, lævo and dextro modification as regards action upon polarized light, so that there are 14 alcohols which may possess the aggregate formula $C_5H_{11}OH$. According to Watt's "Dictionary of Chemistry"[4] the tertiary alcohol[5] is unknown.

Active or normal amyl alcohol (methylethylcarbinearbinol, secondary butylcarbinol, $CH.(C_2H_5)(CH_3)CH_2OH$) occurs in fermentation amyl alcohol, which is thus rendered more or less lævo-rotatory. It has a specific gravity of 0.8150 at 15°/15°[6] and 0.8091 at 25°/25°. So-called *iso*amyl alcohol is considered a mixture of $(CH_3)_2CH.CH_2CH_2OH$ and $(CH_3)CH(C_2H_5)CH_2OH$. It has been found as the angelic and tiglic acid esters in Roman oil of chamomile.[7]

1. Duclaux, Ann. Chim. Phys., 1854, (5), **13**, 91.

2. For methods of synthetic musk manufacture see the following United States patents: 412545, 416710, 451847, 481685, 536324, 546086, 559783, 560771, 602961. Also English patents: 15687, 1890; 48, 1891; 13613, 17703, 17781, 1893; 20521, 1894; 417, 4018, 1895; 9521, 22139, 24568, 28147, 1896; 28467, 1897; F.P. 372603, 1906; D.R.P., 47599, 1888; 62362, 1891; 72998, 77299, 1893; 80158, 84336, 87130, 1894; 86447, 90291, 1895; 91019, 1896; 99256, 1897; 184230, 1906.

3. For formtaion of *n*-amyl alcohol from ethyl *n*-valerate or ethyl *n*-propylacetoacetate see L. Blanvelt and A. G. Blanc, D.R.P., 164294, 1903.

4. **1**, 205. 5. Tertiary butyl carbinol. 6. Perkin, J.C.S., 1884, **45**, 470.

7. Kobig, Ann., 1879, **195**, 99. See also L. Pasteur, Ann., 1855, **96**, 255; Popow,

Inasmuch as this variety of amyl hydrate is the predominating amyl alcohol in fusel oil produced by fermentation, subsequent statements have respect to this variety.[1] The simplest way to obtain this alcohol is by the distillation of fusel oil[2] or by starting with *iso*butyl alcohol, and first converting it into valeric acid.[3]

P. Freundler and E. Damond[4] have recently prepared this alcohol in large quantities by starting with methylethyl ketone, which they obtained by the rectification of commercial acetone oils (which see). The method used was that of Sabatier and Senderens,[5] where the ketone is reduced to secondary butyl alcohol, and subsequently transformed into the bromide by means of phosphorus tribromide. The magnesium derivative is then formed by means of Grignard's reaction, the product being finally treated with the theoretical amount of trioxymethylene.[6] The yield is stated to be about 73% of the amyl alcohol and 7% of the corresponding formol, $CH_2(OC_5H_{11})_2$.

Pure amyl alcohol is a colorless liquid, neutral in reaction, this neutrality being unaffected by indefinite exposure to light. It has a peculiar, cough-producing odor, induces frontal headache, and has an acrid, burning taste. Dropped on paper, an oily mark results, which disappears but slowly. One part of amyl alcohol is said to dissolve in 39 parts of water at 15.5°, forming a liquid of 0.998 sp.gr. Conversely one part of water dissolves in 11.6 parts of amyl alcohol,

Ber., 1873, **6**, 560; Bakhover, J.pr.C., 1873, (2), **8**, 272; Le Bel, Ber., 1873, **6**, 70; 1876, **9**, 358; Chapman, Zeit. Chem., 1870, **6**, 406; Pedlar, Ann., 1868, **147**, 243. Tissier, Bull. Soc. Chim., 1893, **9**, 100.

1. Diethylcarbinol $(C_2H_5)_2CHOH$ sp.gr., 0°/?°, 0.832, may be formed by adding water to the product of the action of zinc ethide on ethyl formate (Wagner and Saytzeff, Ann., 1875, **175**, 351). It gives diethyl ketone on oxidation:

Methyl-*n*-propyl carbinol, $(CH_3)_2CH_2CH_2CHOH$, may be formed from its iodide or by reducing methylpropyl ketone with sodium amalgam (Belohoubek, Ber., 1876, **9**, 924). So prepared it is inactive, but if it be dissolved in 20 parts of water and a culture of Penicillium glaucum added, it becomes less rotatory (LeBel, C.R., 1879, **89**, 312). On oxidation, methylpropyl ketone is formed. It gives the iodoform reaction.

Methyl*iso*propylcarbinol, $(CH_3)_3CHCHOH$, is formed from methyl*iso*propyl ketone with sodium amalgam (Munch, Ann., 1876, **180**, 339), or by adding water to the product of the action of zinc methide on bromacetyl bromide (Winogradoff, Ann., 1878, **191**, 125), or chloracetyl chloride (Bogomoletz, Ann., 1881, **209**, 86; Bull. Soc. Chem., 1880, (2), **34**, 330). It has a sp.gr. of 0.833 at 0°/?°.

Tertiary amyl alcohol, amylene hydrate, dimethylethylcarbinol, $(C_2H_5)C(CH_3)_2OH$, boils at 102° corr. (Perkin, J.C.S., 1884, **45**, 471), sp.gr., 0.8144 at 15°/15°, and 0.8070 at 25°/25°. It may be formed from tertiary amyl iodide or from zinc methide and propionyl chloride (Popoff, Ann., 1868, **145**, 292; Jermolajeff, Zeit. Chem., 1871, **7**, 275; Wyschnegradsky, Ann., 1878, **190**, 336). It has a camphor-like smell, and has been used as a substitute for chloral as a narcotic and soporific.

Fermentation hexyl or caproyl alcohol, which boils at 150°, and is obtained by the distillation of fermented grape skins, has been reported as present in crude fusel oil. Secondary isoamyl alcohol has been synthesized from bromacetyl bromide (Winogradoff, Ann., 1878, **191**, 125), chloracetyl chloride (Bogomoletz, Ann., 1881, **209**, 70), and *iso*butylene oxide (C.R., 1909, **115**, 21).

2. Lachowitz, Ann., 1883, **220**, 171.
3. Balbiano, Gaz., 1876, **6**, 229.
4. C.R., 1905, **141**, 830. Cf. Gentil, J. Dist., 1897, **14**, 393; Mon. Sci., 1879, **58**, 5168.
5. J.S.C.I., 1903, **22**, 1012.
6. J.S.C.I., 1902, **21**, 286.

forming a clear liquid of 0.835 sp.gr.[1] It forms crystalline compounds with calcium,[2] stannous [3] and antimonic chlorides.[4]

Amyl alcohol is miscible in all proportions with alcohol, ether, chloroform, benzine, benzene, carbon bisulphide, carbon tetrachloride, and is an excellent solvent for resins, sulphur, phosphorus, iodine, camphor, alkaloids and many other organic compounds. It dissolves in all proportions in glacial acetic acid diluted with an equal bulk of water, which differentiates it from the neutral amyl esters (formate, acetate, butyrate, pelargonate, valerate, etc.,) which are not soluble in this mixture. The injurious effects of new whiskey has been attributed to the presence of traces of fusel oil or amyl alcohol.

Detection of Amyl Alcohol. If amyl alcohol be warmed with twice its volume of concentrated sulphuric acid, amyl sulphuric acid is formed with production of a brown color, and development of a peculiar leathery odor. In the presence of sugar or readily carbonizable organic substances the test is fallacious, unless submitted to a product of distillation, especially if boiling between 120°–140°. Under these conditions, the production of a red or faint pink color must be regarded as strong presumptive evidence of the presence of traces of amyl alcohol.

When amyl alcohol is heated with a strong acid (sulphuric) and formic acid, the peculiar peach odor of amyl formate may be recognized. So also, if acetic or valeric acids be substituted for formic, the characteristic odors of amyl acetate or valerate may be detected. The amyl acetate when perfectly pure is said to have the odor of jargonelle pear, and when a pear-like odor is apparent, the addition of a small amount (not over 5% of the supposed amount of amyl alcohol present) of ethyl alcohol, changes the odor to that of the bergamot pear.

1. According to Kopp (Ann., 1855, **94**, 289) the sp.gr. at 0° is 0.8248, and at 18.7°, 0.8113. It is 0.715 at 130.5° according to R. Schiff, Ann., **220**, 102. It slowly evaporates on paper, leaving a temporarily greasy stain. See Wittstein, Jahrsb., 1862, 408; Balbiano, Ber., 1876, **9**, 1437). Herz (Ber., 1898, **31**, 2671; 1904, **37**, 4746), who has made careful determinations of the solubility of amyl alcohol in water at 22°, gives the following summary: 100 cc. water dissolves 3.284, cc. amyl alcohol, sp.gr. of solution, 0.9949. Volume, 102.99 cc. 100 cc. amyl alcohol dissolve 2.214 cc. water; sp.gr. of solution, 0.8248. Volume 101.28 cc. sp.gr. water, 0.9980, and amyl alcohol, 0.8133, both at 22°. See also Alexejew (Ann. Phys. Chem., 1886, **28**, 305). For solubility of *iso*amyl alcohol in water see Balbiano, Ber., 1876, **9**, 1437; for solubility in aqueous ethyl alcohol see Bancroft, Phys. Rev., 1895–96, **3**, 193; Pfeiffer, Zeit. Phys. Ch., 1892, **9**, 444; Grassi, Pogg. Beibl., 1888, **12**, 242; Costa, Ibid., p. 239. The expansion of crude fusel oil by heat is an important matter when large quantities are being purchased by volume. From careful experiments using both Russian and German fusel oils from various sources, it has been determined that within the range 15°–40°, crude fusel oil expands 1 part in 1,600 per degree; i.e., 800 gals. at 20° would become 801 gals. at 22°.

2. Handl, Monats., **2**, 209. 3. Bauer and Klein, Ann., 1868, **147**, 249.

4. For derivatives of the amyl alcohols from fusel oil see W. Markwald and E. Nolda, Ber., 1909, **42**, 1583.

If amyl alcohol be heated with an oxidizing agent (e.g., sulphuric acid and potassium bichromate) an apple-like odor of valeric aldehyde $C_5H_{10}O$ first results, which upon continued oxidation passes into the corresponding acid (valeric), recognizable by its strong and peculiar smell. The presence of much ethyl alcohol results in the formation of acetaldehyde and acetic acid, which seriously interferes with the delicacy of the test.

The quantitative determination of amyl alcohol may be approximately made by cautious oxidation with chromic acid mixture, and distillation, titrating the resulting aqueous distillate for valeric acid.

Synthetic Fusel Oil. Less than two decades ago fusel oil and commercial amyl alcohol was regarded as a troublesome and ill-smelling by-product, and one which could be purchased for little more than the cost of carting. In those days its consumption was extremely limited, and but a small percentage of the normal production. It was used as a fuel, in small quantities as an ingredient in illuminating gas,—all uses which indicate the reduced value placed upon it. The earlier experiments as to the origin and production of fusel oil, were conducted mainly from the purely scientific standpoint, or in a lesser degree to attempts to reduce to a minimum an undesirable and difficultly salable poisonous by-product of the normal fermentative processes.[1]

The gradual but steadily increasing demand for fusel oil in the arts, not only as a direct solvent in the celluloid and kindred industries, but for the production of amyl esters—principally the acetate—gradually forced the position of fusel oil from an undesirable to a much sought for commodity, and turned the attention of investigators toward methods to increase rather than to eliminate or minify its production. The discoveries and inventions of Stevens, Schüpphaus, Hale, Crane and Field, in the early eighties of the past century, opening as they did, many new uses for the product, have caused the cost of crude fusel oil to rise steadily, and with it the cost of its principal derivative, amyl acetate. With the increase in price of fusel oil, the multiplication of uses to which it was put, and its growing scarcity due to underproduction, it is to be expected that interest in its synthetic production should have engaged the attention and time of men of reflection and research.

Morin found in 1888[2] that normal amyl alcohol is produced in the fermentation of glycerol in quantities amounting to 4% of the mixture

1. And with considerable success as attested by the researches of Linnet (C.R., 1891, **112**, 663), and Springer (Sci. Am. Suppl., 13125).
2. C. R., 1888, **105**, 816.

of alc hols obtained (equivalent to about 1% of the glycerol used).[1] L. Perdrix[2] investigated an amyl alcohol forming bacillus which he isolated from Paris drinking water, and by means of which he obtained 105–110 cc. alcohol per k. of potatoes.[3] In 1896 Rayman and Kries, in a series of investigations on the by-products of alcoholic fermentation, determined that amyl alcohol was produced by pure cultures of yeast, quite apart from any contamination with bacteria, but at that time failed to establish the conditions necessary for its production. Later[4] they claim to have definitely ascertained that the formation of amyl alcohol by pure yeast is not attributable to the unfavorable physiological condition of the individual yeast cells. They found that pure cultures of distillery yeast produced no amyl alcohol in artificial glucose media, but that if barley worts be employed, amyl alcohol is found among the products of fermentation. Consequently the inference was drawn that the amyl alcohol is not the product of the fermentation of hexoses (starches or sugars), but of those carbohydrates accompanying the hexoses, and which belong to the class of 'furfuroids' prepared by Tollens by the acid hydrolysis of brewers' grains.[5]

The experiments of Emmerling[6] with various races of yeasts and several different fermentable carbohydrates, showed that under normal conditions of alcoholic fermentation only infinitesimal quantities of fusel oil are produced so long as the fermenting wort remains pure. On the other hand it has been well established that many bacteria possess the property of forming higher alcohols[7] from carbohydrates. Amongst these may be mentioned the "amylic ferment"[8] of Pereire

1. This corroborated the previous work of Fitz, who isolated from the products of glycerol fermentation a specific micro-organism, the Bacillus butylicus.

2. Zeit. f. Spirit. Ind., 1891, **14**, 177.

3. The bacillus was found to grow only out of contact with air and was easily cultivated in an atmosphere of hydrogen or carbon dioxide, the most favorable temperature being 35° and the maximum 43°. Under favorable conditions spores readily form, which remain for 10 days at a temperature of 50°. It differs from Pasteur's Vibrio butyricus of Van Tieghem's amylobacter. The author, from analyses made by him, considers the ultimate products of fermentation to consist of butyric acid and amyl alcohol, with smaller amounts of acetic acid.

4. Woch. f. Brau., 1904, (2), **21**, 25.

5. A series of experiments was therefore undertaken in which glucose solutions containing peptone and nutrient salts were fermented with pure cultures of Saccharomyces cerevisiæ, due precautions having been taken to guard against contamination. Some of the fermentations were continued up to three weeks, and the products subsequently obtained included ammonia, organic bases and sulphur compounds. In addition to these decomposition products there were usually formed formic and valeric acids, acetaldehyde, ethyl alcohol, but never amyl alcohol. On the other hand when the wort was prepared from raw barley saccharified by malt fermented for 11 months, and containing added 'furfuroids,' yielded ethyl alcohol and acetaldehyde and also large quantities of amyl alcohol.

6. Ber., 1904, **37**, 3535; Zeit. f. Spirit. Ind., 1904, **27**, 477.

7. Especially butyl alcohol; see Zeit. f. Spirit. Ind., 1896, **19**, 136; 1894, **17**, 233; Rec. trav. Chim., 1893, **12**, 141.

8. Also Granulobacter butylicum and Bacillus orthobutyricus.

and Guignard.[1] Bacteria which are especially active in this kind of fermentation occur on potato skins. The most suitable carbohydrates appear to be starch and cane sugar, especially in the unhydrolyzed state.[2] Emmerling found that the addition of decomposed yeast was not favorable to the production of fusel oil. The next year[3] he reported continuation of his investigations on the fermentation of molasses by bacteria present on potato skins, and found it necessary to dilute the molasses to a concentration of about 10% sugar, since with higher concentrations the fermentation soon subsided and the formation of lactic acid ensued. The yield of total alcohols averaged 4.3% on the molasses, or 8.9% on the sugar.[4]

Pringsheim[5] confirmed the observations of Emmerling as to the existence of a fusel oil forming bacillus on potatoes, but was unable to obtain satisfactory and well-controlled yields.[6] It is worthy of note

1. J.S.C.I., 1902, **21**, 558, 1090. In the patented method obtained by these authors (F.P. 316062, 1901), an amylic fermentation is induced in any suitable saccharine solution by means of the added culture of the amylic vibrio, the process being conducted at 40° in presence of an excess of chalk. When sufficiently advanced, the wort is cooled to 24°, and transferred to another vat, where it is pitched with distillers' yeast, and fermentation completed in the usual manner. It is claimed that on distillation a spirit highly charged with amyl and other more complex alcohols is obtained.

2. For instance, 1,000 gm. boiled potatoes and 50 gm. wheat grist suspended in 3 l. water with a little chalk, and infected with potato peel, yielded 25 cc. insoluble fusel oil; 500 gm. molasses containing 48% sugar, yielded 19 cc. fusel oil under similar conditions. The fermentations were carried out anaerobically for 4 weeks at 37°, hydrogen, carbon dioxide and butyric acid being the by-products. The same materials saccharified by malt yielded only 1.5 and 1.8 cc. fusel oil respectively. The products consisted of propyl, butyl and amyl alcohols with only traces of ethyl.

3. Ber., 1905, **38**, 953.

4. When isolated, the product was found to contain a large amount of ethyl alcohol and some *n*-propyl alcohol, but the main constituent was *n*-butyl alcohol, amyl alcohol being practically absent. The bacteria appeared to ferment best in the absence of air, but found not to be obligatory anaerobes. The motility of young cultures is lost as the growths age. In the absence of a mild alkali (chalk) it was found that the amount of higher alcohols was materially reduced, the bulk of the sugar being converted into acids of the fatty series, principally butyric.

5. Ber., 1905, **38**, 486.

6. He found that when pieces of American potato were digested for some days under water at a temperature of 35°, three classes of organisms were isolated from the slimy mass, viz., a round coccus, an organism apparently identical with B. mesentericus vulg., and the fusel oil bacillus. This latter is a motile rodlet which converts potatoes into slime with the copious evolution of hydrogen and carbon dioxide, and the production of amyl alcohol. When spores are produced, the rodlets were observed to swell up into club-shaped cells, the latter surviving heat at 80° prolonged for 10 minutes. It was observed that no growth on potato resulted when alcohol in 10% amount was present. It would therefore appear unlikely that this bacillus is responsible for the production of fusel oil in distillery washes. He also (Biochem. Z., **10**, 490) found that certain inorganic salts, notably ammonium sulphate, repressed the formation of fusel oil, and this inhibiting action depended on the amount of salt present. For instance when 175 lbs. of rye, 75 lbs. of maize and 80 lbs. of malted barley are fermented in a volume of 2000 l., 5 l. of hydrous fusel oil are obtained; when 250 gm. $(NH_4)_2SO_4$ were added before fermentation 2.5 l. are given; 500 gm. gave 2 l. and further increase to 1 k. gave no decrease

that in the third of a series of articles on the chemical mechanics of alcoholic fermentation, E. Büchner and J. Mesinheimer [1] found that an examination of the alcohol produced by the fermentation of sugar by yeast cell juice yielded only minute traces (about 0.01%) of fusel oil.[2]

In the work of the previously quoted authorities, the formation of the amyl alcohols has rested upon the supposition that in the normal hydrolysis of the carbohydrates (starch and sugar) the molecule underwent a systematic degradation, with the splitting off of ethyl and amyl alcohols. However, previous hypotheses did not satisfactorily explain the low yields of fusel oil obtained by investigators when their theoretical deductions were adhered to on a practical scale, and also from the discouraging fact repeatedly observed, that conditions apparently identical did not result in the production of equal quantities of alcohol. In other words, the process was not under approximate control.

It apparently has been left to Dr. Felix Ehrlich of Berlin,[3] to experimentally demonstrate the theory first enunciated by Müller in in 1857, that the fusel oil of fermentation is a product of the activity of yeast upon the albuminoid derivatives of the wort, and that the

in the fusel oil produced. A fractionation of the fusel oils did not show any perceptible difference in content for that produced with or without $(NH_4)_2SO_4$. *Iso*-propyl and *n*-butyl alcohols were found, but these were traced to butyric acid fermentation. The addition of $(NH_4)_2SO_4$ to potato mash fermentation showed no change in the quantity of fusel oil produced.

K. Windisch (Zeit. f. Spirit. Ind. 1904, **27**, 311) in continuing the work of Raymond and Kries, inoculated a series of nutrient sugar solutions, both with yeasts rejuvenated by culture through numerous generations, and with others which had finished their alcoholic fermentation years before. It was found that neither unfavorable composition of the nutrient medium or the age or physiological condition of the yeast cells influence the formation of amyl alcohol. On the contrary his work showed that amyl alcohol is a product of the culture yeast, that it is formed only in the presence of certain carbohydrates, and that it is the nature of the nutrient medium on which the formation and yield of higher alcohols depend. None of the artificial nutrient solutions yielded a trace of amyl alcohol with pure distillery yeast, but with a clear, sterile, barley-wort malt, amyl alcohol always appeared. From this observation the conclusion was reached that the source of the alcohol was not the hexoses, but fermentable sugars obtained by the hydrolysis of other polysaccharides occurring in the raw materials used.

Lindet (C.R. 1891, **112**, 663) has contributed to the question of the origin of the higher alcohols, and prepared two solutions each of cane and brewing sugar. One of each sugar was fermented with a large and one with a small quantity of yeast. The solution seeded with the large quantity of yeast yielded an alcohol containing 1.17 cc. higher alcohol per liter, ethyl alcohol obtained. The cane sugar solution seeded with a small quantity, gave 2.3 cc. high alcohols per liter ethyl alcohol. It was also found that if the fermentation was conducted at a higher temperature, more higher alcohols were produced. From the experiments recorded the opinion was reached that the higher alcohols are not produced by yeast, but are formed by some other organism present as an impurity.

1. Ber., 1906, **39**, 3201.
2. Zeit. f. Zucker Ind., 1905, **55**, 539.
3. D.R.P. 177174, 1905.

sugar plays no part in its formation.[1] In showing that previous theories have rested upon false premises, he apparently proves that fusel oil arises from the decomposition of proteid matter such as the amino acids,[2] not by bacterial action, but from the vital activity of the yeast itself—an autofermentation. As the conclusion to an extended series of experiments, *iso*leucine was discovered in the uncrystallizable portion of a strontian molasses residue, and which he has established as being a normal factor of decomposition occurring in the albuminoids and associated with leucine. In constitution, *iso*leucine has shown itself to be the first of the known amino acids containing two asymmetric carbon atoms, and represented therefore by the formula,

$$\begin{matrix} CH_3 \\ C_2H_5 \end{matrix}\!\!\rangle\!\overset{*}{C}H.\overset{*}{C}H.NH_2.COOH,$$

in which it appears to be a methylethylamidopropionic acid, standing in close relation to the optically active amyl alcohol. The latter may be produced from *iso*leucine by means of the aldehyde and cyanhydrin reactions, and subsequent saponification. That similar relations exist between leucine and *iso*amyl alcohol is indicated by the following reactions, in which *iso*butyl and normal propyl alcohols are included:

$$\underset{\text{l-leucine}}{\begin{matrix} CH_3 \\ CH_3 \end{matrix}\!\!\rangle\!\overset{*}{C}H.CH_2.CH.NH_2.COOH} + H_2O =$$

$$\begin{matrix} CH_3 \\ CH_3 \end{matrix}\!\!\rangle\!\underset{\text{l-isoamyl alcohol}}{CH.CH_2.CH_2OH} + \underset{\text{ammonia}}{NH_3} + \underset{\text{carbon dioxide}}{CO_2},$$

1. A portion of the credit for this discovery ought perhaps to be accorded to Hans Pringsheim (Ber., 1906, **39**, 4048; Woch. Brau., **24**, 31) who has developed a biological method of analysis to determine the presence or absence of the important NH.CH.CO group in albuminoid bodies, and other substances closely related to the proteids. This is of importance as pointing to a possible analytical method to be applied to organic material to indicate its value as a source of raw material for fusel oil formation. He cites the literature on the nourishment of yeast, and their fermentative power, and finds that yeast nourished with nitrogenous food such as leucine, tyrosine, asparagine, hippuric acid, glycocoll and phenyl glycocoll, which contain the NH.CH.CO group, have decided fermentative power, while yeast nourished with acetamide, acetanilide, pyridine, quinoline, or acridine chlorides, dimethylaniline chloride, naphthionic acid and diphenylamine, all nitrogen-containing compounds, do not possess this power. His method is to grow the yeasts for some time in a solution of the substance to be examined, then inoculate a sugar solution with the yeasts and note whether or not fermentation takes place. The fact was noted that yeasts grown in a sugar solution can utilize the sugar or carbonaceous food for growth without the sugar fermenting. For formation of fusel oil in the "acetone Dauer" yeast fermentation see Pringsheim, Ber., 1906, **39**, 3713.

2. See the eighth Faraday Lecture by Emil Fischer (J.C.S. 1907, **91**, 1749), "Synthetical Chemistry in its Relation to Biology," for development of this field of research; also C. Alsberg, J.A.C.S., 1910, **32**, 704; R. Bradbury, J. Frank. Inst., 1909, **168**, 85.

$$\begin{matrix}CH_3\\C_2H_5\end{matrix}\!\!>\!\overset{*}{C}H.\overset{*}{C}H.NH_2.COOH + H_2O = \begin{matrix}CH_3\\C_2H_5\end{matrix}\!\!>\!\overset{*}{C}H.CH_2OH + NH_3 + CO_2,$$

d-isoleucine — optically active amyl alcohol

$$\begin{matrix}CH_3\\CH_3\end{matrix}\!\!>\!CH.CH.NH_2.COOH + H_2O = \begin{matrix}CH_3\\CH_3\end{matrix}\!\!>\!CH.CH_2.OH + NH_3 + CO_2,$$

a-amido-*iso*valeric acid (butalanine) — *iso*butyl alcohol

$$CH_3.CH_2.CH.NH_2.COOH + H_2O = CH_3.CH_2.CH_2OH + NH_3 + CO_2.$$

a-amido-*n*-butyric acid (glutaminic acid) — *n*-propyl alcohol

These reactions indicate the suggestion first put forth by Ehrlich[1] that *iso*butyl alcohol is produced from *a*-amino-*iso*valeric acid and *n*-propyl alcohol from glutaminic acid during fermentation. The amyl alcohol so produced remains in the solution as fusel oil, while the ammonia is at once incorporated by the yeast to form living protoplasm. Experimental proof of this is furnished by the observation that when pure yeast is allowed to grow upon pure sugar and pure leucine, ammonia cannot be detected in the solution at any stage of the fermentation; moreover, acetone yeast, which contains no enzymes capable of synthesizing proteins, does not convert leucine into fusel oil. The author has carried out a number of fermentations in 5–10% cane-sugar solutions, continuing the fermentation until no more sugar was left; it was found that solutions containing leucine were more rapidly fermented than others. The yield of amyl alcohol in the raw spirit was raised by the addition of leucine from 0.4 or 0.7% up to 3%. From rough measurements it appears that with a strong yeast culture the amount of amyl alcohol produced corresponds fairly closely with the amount of leucine used up. The addition of asparagine or ammonium carbonate generally diminishes the amount of amyl alcohol formed. By means of the enzyme endotryptase[2] the proteins are split up not alone to peptones, but again as far as the amino acids. The interaction resulting in the formation of amyl alcohol is intimately associated with the building up of protein substances in the yeast cell and inseparable therefrom; thus the fact of amyl alcohol resulting from the fermentation of pure sugar becomes explicable. The author, as a result of his work, concludes that the other higher alcohols and a portion of the fatty acids are derived from other members of the amino-acid series. It was found that whereas pure cultivated yeast acting upon pure sugar yielded only a trace of fusel oil, the same

1. It is suggested that *iso*butyl alcohol is produced from *a*-aminovaleric acid, and *n*-propyl alcohol from glutaminic acid during fermentation. Cf. "Bacterial Decomposition of Primary Proteid Decomposition Products," W. Brasch, Biochem. Z., 1909, **22**, 403.

2. Biochem. Z., through Z. ges. Brauw., 1907, **38**, 19.

*m*ixture yielded inactive amyl alcohol when leucine was added, and *d*-amyl alcohol when *iso*leucine was added, the quantity of amyl alcohol produced being approximately equivalent to that of the amino acid consumed. It was also found in the case of leucine, that the yeast had selectively attacked this racemic amino acid, and had confined its action solely to the *l*-leucine, leaving the *d*-leucine unchanged.

The NH_3 formed by this process is immediately utilized by the yeast for building up albuminous matter. After being killed by acetone the yeast no longer is capable of forming proteins by synthesis, and therefore has no effect upon the amino-acids. In solutions of sugar and leucine, comparatively more amyl alcohol will be produced by a yeast poor in N which needs more NH_3. Even in pure sugar solutions the yeast produces some fusel during fermentation, because its albumin is partly split up by autolysis into amino acids as tyrosine, leucine, *iso*leucine and valine, which are, in turn, transformed into fusel. If more readily assimilable N is present, such as contained in NH_3 salts or asparagine, the yeast takes its supply of N mainly from them without splitting up the amino acids to the same extent, whence considerably less fusel is formed. A whole series of alcohols and analogous substances are therefore obtainable from the various amino acids through the action of yeasts during the fermentation of sugar.

Ehrlich has assumed, and supported his assumption experimentally, that the small quantity of fusel oil produced in the fermentation of pure sugar is derived from the amino acids of the yeast, the quantity being limited by the re-synthesis of the albumin from the products of the proteolytic enzyme. It would appear, therefore, that amyl alcohol is formed only in appreciable quantities when the yeast is supplied with an excess of amino acids.[1]

From the foregoing, the explanation follows that the formation of the single optically active constituent of fusel oil, viz., optically active amyl alcohol, from *iso*leucine, is one in which one of the asymmetric carbon atoms remains unattacked. In continuation, just as the optically active amyl alcohol results from *iso*leucine, other optically active compounds are derived from this body, specifically the widely occurring dextro-rotatory valeric acid. In a later communication[2] he raises

1. Three hypotheses as to the formation of amyl alcohol from leucine have been experimentally investigated, the most likely explanation probably being that the amino acid combines with water and separates ammonia under the action of the yeast enzymes, with the production of the corresponding hydroxy acid, and that this latter is decomposed into carbon dioxide and amyl alcohol in the same manner as lactic acid probably yields carbon dioxide and ethyl alcohol under similar conditions. See also this author, Mon. sci., 1890, (3), **32**, 603.

2. Ber., 1906, **39**, 4072; Zeit. f. Zucker Ind., 1906, **2**, 1145, copious bibliographic references being given in the footnotes.

the question as to whether the enzyme which causes this fermentation is separable from the living cell or not. It has been found that by means of pressed yeast juice or the acetone-killed yeast, only a trace of fusel oil is obtained. Ehrlich is of the opinion that the formation of fusel oil takes place together with the upbuilding of albumen by the yeast, and that the separation of the enzyme causing this has not been successful.[1]

1. F. Ehrlich (Ber., 1907, **40**, 1027) sums up the present state of our knowledge on this subject, by saying that the higher alcohols are the unassimilated residues from the synthesis of albuminoids by the yeast from the amino acids. The ammonia which constitutes the nitrogenous residue of these acids can never be detected as such in the liquids; it must therefore be converted, in proportion as it is split off, into insoluble nitrogenous yeast substance, whilst the higher alcohols are excreted in equivalent quantities. In the ordinary fermentation of pure sugar by yeast the percentage of fusel oil calculated on the total yield of alcohol, varies from 0.4–0.7%. A yeast poorer in nitrogen takes a longer time to ferment a given quantity of sugar, and produces a larger quantity of fusel oil than a yeast rich in nitrogen with a higher fermentative power. When leucine is added to the sugar solution the quantity of fusel oil produced may rise to 3% under similar conditions. The highest proportion of fusel oil is formed when a relatively small portion of yeast is caused to act on a large quantity of sugar, proportions of 1 : 5 being very favorable to the production of the maximum quantity of fusel oil. On the other hand, when fermentation is effected rapidly, with a large quantity of yeast rich in zymase, the decomposition of the leucine present is relatively small. In industrial fermentations the composition of the fusel oil varies according to the nature of the amino-acid constituents of the wort. Fusel oil is also produced from amino acids excreted by the yeast, but this factor only comes into play to any serious extent when, in consequence of deficient nitrogenous nutrition, high temperature, or other unfavorable conditions, a partial autolysis of the older yeast cells takes place to afford nutrition to the younger ones. The highest yields of fusel oil are obtained by the fermentation of pure sugar by yeast poor in nitrogen, with or without the addition of leucine. The presence of other nitrogenous substances, as in natural worts, decreases the production of fusel oil. It is decreased almost to nothing, even in presence of leucine, if a sufficient quantity of some other easily assimilable nitrogenous compound be added, especially if that compound be readily susceptible to hydrolysis. Asparagine and particularly ammonium carbonate can be used to suppress the production of the higher alcohols. The yield can be increased by the addition of leucine prepared by the evaporation of the products of the hydrolysis of albumen by acids, but it is decreased if these hydrolytic products be added direct without evaporation. The synthesis of albumen from its amino-acid decomposition products does not take place by simple condensation, as in Fischer's synthesis of the polypeptides, but involves the complete degradation of the nitrogenous residue into ammonia, with an elimination of the non-nitrogenous portion comparatively unchanged. The alcoholic fermentation of the amino acids would appear to be an important general biological phenomenon accompanying the synthesis of albumen. Its bearing on the production of odorous principles in plants is illustrated by the fact that the author has obtained *o*-hydroxyphenyl ethyl alcohol by fermentation in the presence of tyrosine, and phenylethyl alcohol similarly from phenylalanine, and benzylethyl alcohol and benzaldehyde from phenylaminoacetic acid. Ehrlich (Biochem. Z., **8**, 438) was able to use his discovery in splitting racemic amino acids by partial fermentation with yeast in sugar solution. He thus isolated *d*-leucine, *d*-alanine, *l*-valine, *d*-phenylalanine, *d*-serine, and *l*-*a*-aminophenylacetic acid, the latter being new. See also P. Ehrlich, (Z. Ver. Zucker Ind., 1906, **2**, 1145) copious bibliographic references being given in the footnotes.

J. Effront (Z. f. Spirit. Ind., 1906, **29**, 103; C.R., 1908, **146**, 779; U.S.P. 953025, 1910) has shown that the phenomenon wherein beer yeast decomposes racemic amino acids with production of higher alcohols is intercellular; no ammonia can be detected in the liquid and the enzyme concerned is not present in the cell-juice

The present theory of fusel oil formation is compatible with the researches on the polypeptides by Emil Fischer and his pupils, Mandel, Levine and others, on their studies of the fission of the albumen molecule, and constitutes a new and peculiar degradation of albumen and of the amino acids. This is distinctively different from the well-known elimination of carbon dioxide from the amido acids of putrefaction.[1]

In the first instance the yeast deamidizes the amido acids, for leucine under the hydrolyzing action of an acid ferment, in all probability at first passes to the corresponding oxy acid (leucic acid), which then in a manner similar to the formation of ethyl alcohol in lactic acid fermentation by the splitting off of carbon dioxide, is converted into amyl alcohol. In the de-amidizing process, the molecule of ammonia liberated is used by the yeast for albumen synthesis. Ehrlich has demonstrated quantitatively that the fusel oil formation corresponds in an entirely analogous manner to the upbuilding of the proteid molecule of the yeast. In this process of transformation of a definite amount of leucine or its isomers into the corresponding amyl alcohols, a definite quantity of sugar and yeast is utilized, and this amyl alcohol synthesis is due primarily to the life process in the yeast. In the future production of fusel oil on a commercial scale the first requisite indicated is the acquisition of large amounts of leucine or similar bodies at a not prohibitive cost. As leucine is obtainable from all kinds of waste products rich in nitrogen, as proteids and

expressed from the yeast. The author has studied another action of yeast on amino acids, which is attributable to a specific enzyme, "amidase," which decomposes amino acids and their amides into ammonia and volatile acids. The action of amidase may be studied by mixing 2 gm. of asparagine with 10 gm. of yeast and a little water, adding 6 cc. of *N*/1 sodium hydroxide and diluting with water to 100 gm. The solution is incubated at a temperature of 40° and the ammoniacal nitrogen is determined from time to time by distillation with magnesia. After 72 hours the whole of the nitrogen of the asparagine and the greater part of that of the yeast is converted into ammonia. If the liquid be filtered after 60 hours, the enzyme, amidase, is present in the filtrate and its presence may be demonstrated by the addition of a further 1 gm. of asparagine, which will be converted into ammonia in 6 hours. The active substance in autolyzed yeast also decomposes aspartic acid, leucine and glutamic acid in a similar manner. The production of ammonia and volatile acids from the amino acids in this way takes place without the formation of alcohol; the presence of alkalis is favorable. From 10 gm. of asparagine, 5.5 gm. of volatile acids, (b. pt. 110°–145°), consisting chiefly of propionic acid, were obtained. Amidase is present in top-fermentation yeasts and wild yeasts; it has also been observed in *Amylobacter butyricus* (*Chlostridium butyricum*, *Vibrio butyricus*, *Bacillus amylobacter*), but its presence in bottom-fermentation yeasts is doubtful. See Naviasky, (Arch. Hyg., **66**, 209).

1. See "Derivatives of Isoleucine," E. Abderhalden, P. Hirsch and J. Schuler, Ber., 1909, **42**, 3394; "Derivatives of *p*-iodophenylalanine," Abderhalden and G. A. Brossa, Ber., 1909, **42**, 3411; "Constitution of Amino Acids," H. Ley and M. Ulrich, Ber., 1909, **42**, 3440; "Monamino Acids," Abderhalden and H. Dean, Z. physiol. Ch., 1909, **59**, 170; with W. Weichardt, Ibid, 174; "Cleavage of Amino Compounds," T. Takeuchi and R. Inoue, J. Coll. Agric. Imp. Univ., Tokio, 1909, **1**, 15. For hydrolysis of proteins see Abderhalden, abst. J.C.S.I., 1909, **28**, 240, 323, 518, 978, 1083; 1910, **29**, 146.

albuminoids of every description, this portion of the problem presents but little difficulties. Perhaps the source of leucine of first importance is the waste liquors from the strontian sugar-extraction process, from which leucine may be made to directly crystallize out in a state of quite high purity. Next in importance, perhaps, are the vinasses or uncrystallizable residues in beet-sugar refining which are also high in other nitrogenous compounds, principally the primary amines. The waste liquors from starch and glue manufacture and those obtained from horn and blood, are all high in nitrogen, and offer inviting fields for experimentation in leucine yields. The technical and remunerative possibilities of these discoveries are at once apparent. Ehrlich has obtained patent protection for the manufacture of fusel oil [1] in which he takes hydrolized or peptonized albumen or mixed amino-acid extracts with ferments (distillery yeast) in presence of carbohydrates (preferably in the form of distillery wort). The fusel oil produced in the fermentation is separated from the ethyl alcohol in the usual manner. Products as molasses mash are used as the carbohydrate containing portion.

A further step has been taken by Pringsheim in this interesting field,[2] he having found in a fusel oil prepared on a large scale from maize,[3] *iso*propyl and *n*-butyl alcohols in addition to the *n*-propyl, *iso*butyl and amyl alcohols ordinarily found in fusel oil. These former alcohols are fermentative products of the ordinary butyric acid bacillus, and hence it was inferred that the fusel oil in question owed its formation to two distinct processes, viz., (1) the action of yeast on the decomposition products of proteins as discussed above, and (2) butyric acid fermentation. In support of this view, the author draws attention to an analysis of fusel oil from potatoes published by Rabuteau [4]; in this case also both *n*-butyl and *iso*propyl alcohols were present in addition to the ordinary constituents of fusel oil. If these researches are corroborated, the whole field of butyric acid fermentation is open to the possible synthetical production of fusel oil. He also has proven [5] that leucine, which is converted into amyl alcohol by yeasts during alcoholic fermentation, may be in part shielded by the presence of other sources of nitrogen, e.g., ammonium sulphate, from the attack of the yeast. This conclusion has been confirmed by experiments made on a large scale, 500 gm. of ammonium sulphate for 2,000 l. of mash suffice to reduce the formation of fusel oil to a minimum. Double this quantity of ammonium sulphate produces no further reduction in the amount of fusel oil, showing the amino acids cannot be entirely

1. E. P. 6640, 1906; D.R.P. 177174, 1905.
2. Biochem. Zeit., 1909, **16**, 243.
3. J.S.C.I., 1908, **27**, 824.
4. C.R., 1878, **87**, 500.
5. Biochem. Zeit., 1908, **10**, 490.

protected. In some instances, particularly in the case of materials lacking sufficient protein, the addition of ammonium sulphate causes an increase in the amount of alcohol. Investigation of the nature of the fusel oils obtained in these experiments showed that they all contained *n*-butyl alcohol in quantity. That formed without ammonium sulphate contained also *iso*propyl alcohol, which was almost absent from the product prepared in presence of this salt. These two products, which do not occur in properly conducted fermentations, are the fermentation products of the ordinary butyric acid bacillus. The fusel oils investigated were formed on the one hand by the action of the yeast on protein degradation products, giving rise to *n*-propyl, *iso*butyl, and amyl alcohols, and secondly by the action of the butyric acid bacteria. The alcohols were identified by fractional distillation and conversion into the corresponding iodides.

A. Sultan and I. Stern,[1] working along similar lines, have been granted a patent in France [2] for the production of fusel oil from split albuminous substances, or their isolated cleavage products rich in amido nitrogen. They propose to increase the yield by adding to the mash crude leucine obtained by the decomposition of casein or fibrin.[3] E. A. Mislin and L. Lewin have been granted patent protection in both England and France [4] for a method based on the foregoing principles. They propose to ferment mashes of potatoes, corn or maize saccharified by malt or mashes of cereals, leguminosæ or other nitrogenous seeds and fruits which have been germinated, or mashes made from the residues of spirit or yeast manufacture. Organisms obtained by the fermentation of plum and prune mashes are also named as being suitable. These are rendered alkaline by the addition of 0.5% alkaline earth before fermentation. After fermenting for 120–150 hours the liquor is distilled at 136–140°. The distillate of fusel oil is mixed with acetone to separate the water. The average yield by means of this process is not stated.

Réné Locquin [5] states that he has prepared large quantities of synthetic *iso*amyl alcohol, starting with a carefully rectified isobutyl chloride obtained by the action of hydrochloric acid on ordinary *iso*butyl alcohol, the constitution of the latter being undisputed. After

1. Bull. Assoc. Chim. sucr. dist., **24**, 764.
2. F.P. 365619, 1906.
3. In one experiment by their process there was obtained from 1,000 k. potatoes saccharified with 20 k. malt and 25 k. crude leucine, 120 l. rectified alcohol including 10 k. amyl alcohol. In another experiment the patentees record obtaining 300 l. alcohol and 40 k. amyl alcohol from 1,000 k. molasses (80° Brix.) and 50% sugar.
4. E.P. 10435, 1905; F.P. 354807, 1905; abst., J.S.C.I., 1904, **23**, 124, 876, 1107; 1905, **24**, 683.
5. Bull. Soc. Chim., 1904, (3), **31**, 599.

condensation of magnesium with this hydrochloric acid ester (Grignard's method), the magnesium chloride derivative in anhydrous ether solution is acted upon by dry trioxymethylene, synthetic *iso*amyl alcohol being obtained. The boiling point was found to be 131° (corr.) and sp.gr., ?°/?°, 0.823.

Fusel oil is dutiable at one-fourth cent per pound when imported into the United States, according to the Tariff Act of 1897 [1]. In England there is no duty, if it contain less than 15% proof spirits.[2]

Toxic Properties of Fusel Oil. A great deal has been written concerning the highly poisonous nature of the propyl, butyl and especially the amyl alcohols (rectified fusel oil). Allen [3] says "a few drops will produce all the intoxicating effects of a large quantity of ethyl alcohol, with giddiness, nausea and other unpleasant symptoms." Rabuteau [4] finds the intoxicating effects of amyl alcohol to be fifteen times as intense as those of ethyl alcohol, those of butyl alcohol being five times as intense. Researches of other observers have apparently shown that the physiological effect of the alcohols increase with the number of carbon atoms, commencing with ethyl. Dr. B. W. Richardson [5] states that the action of amyl alcohol is similar to that of butyl, but intensified. In the third stage of the action there is observed tremors of regular occurrence, reduction of temperature and profound coma,

1. Paragraph 38, where fusel oil is designated as "amylic alcohol." In Treasury Decision 20357, Nov. 23, 1898, the classification of fusel oil as "amylic alcohol" and not lower alcohols is sustained, but if consisting of a mixture of "alcohols," Treasury Decision 13860, G.A., 2065, of Mar. 22, 1893, stands. The latter decision refers to the protest of Wm. S. Gray to a 25% ad valorem duty on a liquid which boiled between 85°–100° and consisted of lower alcohols, and the protest was overruled. The present importation of fusel oil rests upon these two decisions. (See protest 38145 a-59818).

2. The excise test for this fusel oil is to shake the liquid with an equal volume of water to remove the spirit, and then ascertain the amount of alcohol contained in the aqueous liquid by taking its specific gravity. This test is obviously erroneous on account of the ready solubility of the alcohols lower than amyl. G. L. Ulex, (N.J.P., **39**, 333) has suggested an improvement on this test which consists in heating in a retort 100 cc. of the sample until 5 cc. passes over. The distillate is shaken with an equal volume of saturated aqueous salt solution, and the mixture allowed to stand. If the separated fusel oil amounts to one-half or more of the distillate, the sample is sure to contain less than 15% spirit, and is free from any fraudulent admixture with the same. If less or no fusel oil at all separates, the inference may be safely made that at least 15% of spirit is present. In the latter case, the quantity of the adulterant may be determined by shaking a known volume of the sample with an equal bulk of saturated salt solution (in which propyl and butyl alcohols are sparingly soluble), allowing the aqueous liquid to separate, which is then distilled, and the alcohol present calculated from the volume and gravity of the distillate. A. H. Allen's method is to agitate the sample in a graduated tube with an equal volume of benzine or benzene, subsequently adding sufficient water to cause the benzine to separate. The increase in the volume of the latter indicates with approximate accuracy the amount of amyl alcohol in the sample under examination.

3. Comml. Org. Anal., **1**, 165.

4. L. c. See also Dingl. Polyt., 1889, **272**, 86; abst., J.S.C.I., 1889, **8**, 560.

5. 1875 Cantor Lectures, London.

recovery sometimes requiring two or three days. Brockhaus, who has personally investigated the effects of these alcohols on the system, corroborated the above, amyl alcohol being found most toxic. He concluded that the impurities of potato-brandy had a much more active influence on the human organism than was exerted by ethyl alcohol.[1]

Rectification of Crude Fusel Oil. There are three distinct brands or grades of purity of fusel oil on the market, the original commercial product, the so-called "rectified," which is colorless or nearly so and practically free from water, and the so-called C.P., which is used in forensic and analytical work, and from which traces of nitrogenous bases have been removed.[2] A commercial interest attaches to the first two only.

It has been conservatively estimated that 20–25% of the fusel oil produced outside of the United States finds its way into the American markets. Practically no rectified fusel oil is imported as such. S. F. Ball [3] has calculated that of the 450,000 gallons crude fusel oil im-

1. The author's personal experience as to the extreme poisonous nature of fusel oil is decidedly at variance with the above. In connection with the rectification of fusel oil and production of amyl acetate, at least ten instances have come under personal observation where the workmen in withdrawing samples of crude and refined fusel oil for analysis, by means of a thief (form of pipette), have unintentionally swallowed a large mouthful (40–60 cc.). In addition to a severe gastralgia, burning sensation in the epigastrium and soporific effect, no detrimental after-effects were noticed. In one instance where upon a wager, 3 ounces (85 cc.) was taken at once, and the rectified amyl alcohol remained in the system 40 minutes, before emetics (apomorphine hypodermically) were reactive, acute gastric disturbance followed by prolonged sleep as before, constituted the only observable disturbance. An apparent immunity is acquired by workmen engaged in the handling of fusel oil as an occupation. This is especially noticeable in the decreased tendency to cough upon prolonged contact with fusel oil vapors, and the production of the peculiar frontal headache. It is not unusual for workmen to descend into tanks and stills to clean out or repair the same, and to remain there for one or more hours at a time without relief, in an atmosphere which would suffocate a person unaccustomed to the smell. The workmen experience no disagreeable symptoms, and to persons who have manufactured amyl acetate and handled fusel oil for 25 and 30 years, their physical condition is apparently normal. In fact, at one time, the inhalation of the "fumes" of fusel oil was considered a specific for certain forms of asthma, and was supposed to abort or minimize the paroxysmal attacks of the sneezing or coryza of hay fever. So far as the individual experience of the author goes, the toxic effects of these alcohols have been given undue prominence. For comparative toxicity of ethyl and amyl alcohol see W. Salant, Proc. Soc. Exp. Biol. Med., 1909, 6, 134.

2. The purified alcohol for toxicological work is prepared from the rectified fusel oil, by distillation from alkaline potassium bichromate, then from phosphoric or sulphuric acids, and finally from a strong caustic soda solution, the fraction being reserved which passes over between 127–133°. An amyl alcohol prepared in this manner will give a practically negative result for nitrogen upon combustion.

3. J.S.C.I., 1905, **24**, 17. In the commercial market there is a decided preference for American-produced fusel oil as distinguished from the German and Russian product. It has a less disagreeable odor, contains a larger proportion of higher alcohols, as indicated by the increased yield of rectified fusel oil obtained upon distillation, and the amyl acetate from conversion of this American oil has a more agreeable odor, and has been stated by competent authorities to be a more energetic and efficient solvent for the cellulose nitrates, than amyl acetate produced from

ported annually into the United States, 80% of the entire quantity consumed is used in the manufacture of amyl acetate, while about 19% is rectified and used as such. One of the largest firms of amyl acetate manufacturers in the country, computes that of the crude fusel oil received, not over 15% is rectified, the balance being converted into acetate. In the author's experience this is more nearly a correct average. Crude fusel oil is a light amber to straw-yellow liquid, usually clear, and having a persistent and characteristic odor. In order to purify the commercial product, it is placed in an ordinary rectifying still of copper (Fig. 37), with goose-neck and condenser as shown, the still being filled not over three-fourths full.[1] Gentle[2] steam heat is applied to the still of crude oil, and the distillate for convenience is usually divided into four fractions as follows, none of the distillates being clear cut or definite as to chemical composition.[3]

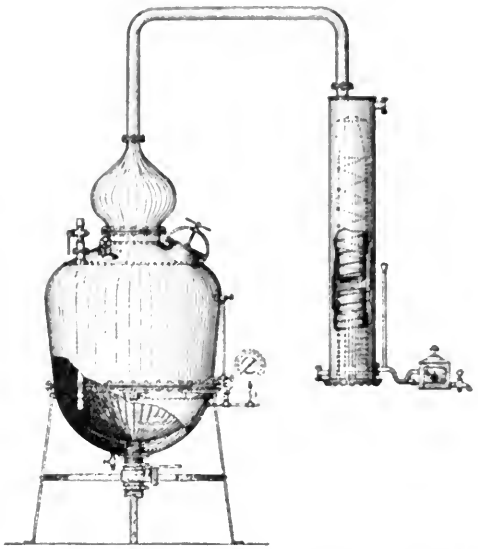

FIG. 37.—Fusel Oil Rectifying Still. (Vulcan Copper Works design.) The inside jacket of the still is spherical in form and made of heavy copper to withstand the steam pressure. It is supported in an independent wrought-iron stand, and equipped with brass draw off in bottom, glass gauge and manhead.

foreign fusel oil. The superiority of American fusel oil and the acetate produced from it is evidenced from the smaller and more pleasant residue left upon evaporation, and this finds importance especially in the pyroxylin lacquer and artificial leather industries.

1. In order to allow for expansion of the oil upon heating, and to give room for too vigorous boiling.

2. Too rapid ebullition at first may cause siphoning of the contents of the still over into the receiver.

3. According to the patented method of J. K. Field, and H. Ujhely (E.P. 2517, 1882) water may be removed from fusel oil by first distilling about 90% of the fraction in the usual manner, the distillate being mixed with petroleum spirit. After agitating the mixture, it is gently heated, and then allowed to stand, the water which separates being removed by decantation and the petroleum spirit separated from the fusel oil by distillation. S. Roessler claims (E.P. 3352, 1880) that fusel oil may be freed from the disagreeable smell and made colorless by fat or vegetable wax. The rapidly decreasing cost of metallic calcium produced electrolytically, has led to the patenting of a method (D.R.P. 175780, 1905) for dehydrating fusel and other alcohols, by warming with calcium shavings and then distilling off the alcohol. On account of the nitride content of the calcium, the

First Runnings. This comprises small amounts of ethyl alcohol, propyl alcohol and water, and is usually miscible with 2–3 volumes of water at the room temperature. It comprises that fraction which contains a sufficiently large excess of water so that the distillate comes over turbid and upon standing separates into an upper layer of alcohol and the water underneath.[1] The entire fraction is allowed to rest until separation has become complete,[2] when the supernatant liquid is withdrawn into another tank, and agitated with a dehydrating agent as calcium or magnesium chloride, preferably the former.[3] Agitation is continued for several hours, the layers allowed to separate, the upper one of alcohols then distilled separately and used either alone as a shellac solvent,[4] or divided into the two fractions, which will and will not mix with an equal volume of benzine without turbidity.[5]

product contains ammonia or its derivatives, and is consequently conducted through burnt alum, which is in itself an advantage.

1. As has been mentioned, the alcohols are much more soluble in water than the corresponding acetates. Therefore the recovery of solvent from the aqueous portion of alcohol distillation, assumes more importance than the recovery of the lower acetates, as explained under amyl acetate manufacture. The calcium chloride solutions are further distilled in long column-stills, with hot-water separators, the water being kept at a temperature of 75–80°. About 75% of the alcohols are regenerated in this manner, and after dehydration added to rectified fusel oil or used for pyroxylin dehydration under pressure, being freely miscible with water.

2. Usually over night.

3. Ball (l. c.) has called attention to the fact that the United States import duty (1906) on ethyl alcohol is $2.25 per proof gallon, while that levied on "fusel oil" is but one-fourth cent per pound. If merchandise containing excessive quantities of ethyl alcohol could be "entered" and "passed" as "fusel oil," a considerable saving in duty to the importer would result. In view of the fact that fusel oil of this character might be imported, the Customs authorities caused analyses to be made of numerous samples, with the result that the average amount of alcohol in 50 importations was found to be 5.04%. In 4 instances the amount was 16.38, 18.91, 27.60, and 77.35% respectively.

According to Göttig (Ber., 1890, **23**, 181) who appears to have first discovered this combination of propyl alcohol with calcium chloride, a crystalline body is formed less soluble in water than propyl alcohol. He reports that after distilling the mixture of propyl alcohol and calcium chloride, there separated two crystallizable bodies, one of which gave results indicating the formula $CaCl_2.3C_3H_8O$. To determine whether this was an accidental mixture, the body was recrystallized from propyl alcohol and again gave the same analytical figures. The product formed transparent acicular crystals, slightly heavier than water. It is a fact that 6–15% of alcohols boiling at 80–95° are to be obtained from distillation of the calcium chloride solutions used for fusel oil dehydration purposes.

4. Five or more years ago, when fusel oil could compete in price with wood alcohol, large quantities of these partially dehydrated alcohols, containing 11–13% water by the Customs House alcoholmeter, were used under trade names of LX9, LX10, and by other names as solvents for various resins, principally shellac, copal and dammar. None is being used for this purpose at the present time, due to the high cost of crude fusel oil.

5. A method of purification of low-boiling residues has been suggested, which consists in adding to the alcohol saturated with the water some water-repellant liquid miscible with the alcohol, as petroleum benzine, or the higher-boiling kerosenes, or light spindle oils. The petroleum precipitates out a further amount of water, which is separated by decantation and the alcohol distilled away from the petroleum, the latter being used again for a similar purpose. It has been stated that a repetition of this method will render the lower alcohols of crude fusel oil sufficiently

The former is added to rectified fusel oil,[2] and the latter re-treated. The temperature of the distillate will seldom rise above 90°.[3]

Second Fraction consists of that portion which distills clear, but still shows the presence of water by reacting cloudy when benzene is added to a sample. It represents that portion of the total distillate containing water, but not to the point of saturation, the fraction being discontinued when the absence of a cloudy solution when mixed with benzine, indicates the water present has been reduced to a negligible quantity. It is dehydrated in a manner similar to the first fraction, and the anhydrous final portion added to it.

Amyl Alcohol Fraction. This comprises all that portion of the distillate which upon the addition of one or more volumes of benzine mixes without turbidity.[4] When the distillation has been properly conducted this portion may be considered as practically pure amyl alcohols. If the fusel oil is to be used in the manufacture of "high-boiling" amyl acetate, the still is stopped at the point when the distillate reacts clear with benzine, and after cooling of the still contents, removed to the amyl acetate building for conversion. Where fruit ethers and pharmaceuticals are to be prepared, the amyl alcohol third fraction is sold without the addition of the lower dehydrated fraction. In the selection of rectified fusel oil for the dilution of an amyl acetate pyroxylin mixture used as an application over real leather, this third fraction without admixture is sold. Usually amyl alcohol prepared in this manner by direct steam distillation of crude fusel oil, while water white at first, after exposure for some days to air and light, acquires a light yellow color, which varies in intensity with the care and speed with which the original distillation was carried on. To obviate this

anhydrous for commercial purposes, without exposing them to the solvent action of calcium or magnesium chlorides. So long as any considerable amount of water remains in the still, the boiling-point of the distillate will always be at a temperature close to that of boiling water. The artificial leather and pyroxylin lacquer trade demand a refined fusel oil with the minimum limit of moisture represented by the ability of the fusel oil to mix clear with one or more volumes of benzine. (For fallacy of this, see Tests. Cf. Ilges, E.P. 17927, 1892.)

2. Inasmuch as the present term "refined fusel oil" is rather generic than specific, and comprises all anhydrous products, colorless and obtainable from fusel oil, the lower colorless alcohols are usually disposed of this manner. The lack of uniformity of results in the pyroxylin coating of real leather, is often traceable to the variation in speed of evaporation of the contained fusel oil due to the preponderance of lower or higher alcohols in different lots of the coating composition. Crude fusel oil from potatoes has the most pronounced and disagreeable smell.

3. According to Pierre and Puchot (Ann. Chim. Phys., 1868, (4), **22**, 234,) a mixture of amyl alcohol, b. pt. 130°, and water, boils at 96° and the distillate consists of 2 volumes water to 3 of alcohol. In the case of butyl alcohol, b. pt. 108°, the boiling point is lowered to 90.5°, and the constituents pass over in the proportion of 1 volume of the former to 5 of the latter.

4. Other conditions remaining the same, the slower the distillation is conducted the greater will be the amyl alcohol fraction.

tendency, a second distillation may be made with potassium permanganate[1] or potassium bichromate, aided by the addition of a small amount of caustic soda.[2] When thus redistilled, the product will remain colorless indefinitely.

Bottoms. From 3–10% of liquid will usually remain behind in the still, which the steam pressure fails to distill over. This may be withdrawn after cooling and used for amyl acetate production, or a partial purification may be effected by blowing over the portion by means of a live steam jet introduced directly into the liquid inside the still,[3] separating the supernatant alcohols, which, after dehydration, can be distilled and rendered sufficiently anhydrous for use.

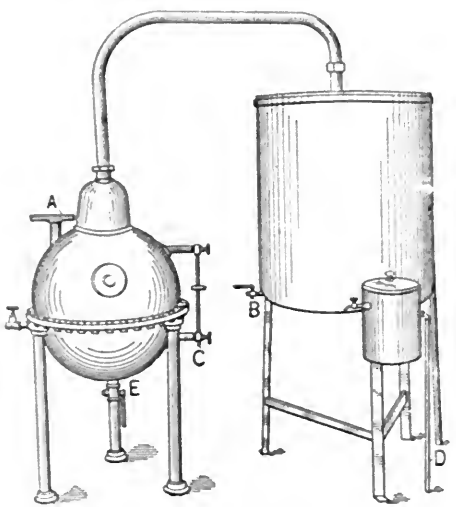

FIG. 38. The Wöllbrink Benzine Purifier.

Yield. It is exceedingly difficult to give even a rough approximation of the average yield of rectified amyl alcohols from commercial fusel oil, due to the variation in composition of the latter, and the method of distillation. In general, taking a fusel oil of same composition, the more uniform and slower the distillation, the larger the yield of the amyl alcohol-containing fraction.[4] The author is aware of importations of the crude oil,[5] all of which were miscible without turbidity in an equal volume of water, and in which, therefore, the amyl alcohols must have been very low. A good crude fusel oil, con-

1. Care must be taken not to use an excess of permanganate. Instances are on record where the ready oxidation of the permanganate has resulted in fires.

2. 0.4% potassium bichromate and 0.6% caustic soda calculated on the weight of fusel oil operated upon, is efficient.

3. The bottoms may also be advantageously distilled with live steam in a benzine purifier of the Franz Wöllbrink style (Fig. 38), where the bottom of the still carries a coil with perforations which causes the fusel oil bottoms to be carried over with the steam. By means of the separator or divider attached to the condenser, the water and fusel oil flow out of the two orifices, the latter from the higher one, on account of its gravity being less than water. The practical insolubility of this high boiling portion in water, causes but little loss by solution of the oil in the discarded water.

4. Fusel oil fractionated in this manner is usually of a light straw color.

5. In each instance, potato fusel oil. For separation of the fusel oils, see G. Garbarini, Bull. Assoc. Chim. sucr. dist., **26**, 1078.

taining not over 7% water, ought to yield at least 60% amyl alcohols, 80% of which should boil above 128°.

An English patent [1] has been granted W. D. Field for a process of rectifying fusel oil by distillation, and is described by the patentee as follows: The crude fusel oil containing the propyl, butyl, amyl alcohols and water, is distilled with light petroleum spirit which has a boiling-point of not over 100°. Amyl alcohol is said to be completely dissolved in the petroleum, while the water accompanying it and the lower alcohols are insoluble, and separate therefore in a distinct layer. After their removal the petroleum-amyl alcohol fraction is distilled, the petroleum coming over first, and being used again for a similar purpose.

Traube and Bodlander [2] have originated a method for the purification of crude fusel oil, and the separation of fusel and ethereal oils from aqueous methyl and ethyl alcohols. It has been found that if mixtures of methyl and ethyl alcohol and water in which fusel oil is contained be nearly saturated with certain salts, as sodium carbonate or ammonium sulphate, a separation of the entire liquid in two well-defined layers takes place at certain degrees of concentration and temperature, and upon examination it was found that the upper stratum of liquid contained nearly all the admixture of fusel oils originally present in the alcoholic liquids. The most favorable results were arrived at by taking 39–40 k. anhydrous sodium carbonate or ammonium sulphate, dissolving in 1 hecto of water, to which solution is added at a temperature of about 20°, 50 l. raw fusel oil. After formation of the well-defined layers, they are separated in a suitable manner, and by once repeating the treatment, a highly concentrated solution of fusel oil may be obtained. This process does not take into account the considerable losses due to the solubility of the alcohols in the alkali solution, or the cost of fractionally recovering the same, and the regeneration of the carbonate or sulphate. It is also apparent that the method requires a large tank capacity if manufacturing amounts are to be daily purified in this manner.

1. E.P. 2517, 1883. Cf. Franz Pampe, D.R.P. 205034, 1906.

2. For other references in English to the alcohols of fusel oil and their purification, see J.S.C.I., Vol. **1**, 1882, 115, 157, 197, 294, 331, 377; 1883, 357, 389; 1884, 514; 1885, 238, 420, 462; 1886, 249, 393, 395, 457, 496, 498, 546; 1887, 52, 144, 146, 338, 376, 514, 555, 563; 1888, 42, 127, 129, 238, 348, 405, 449, 450, 453, 527, 762; 1889, 219, 309, 310, 441, 559, 560, 734, 924, 995; 1890, 18, 537, 541, 1155; 1892, 161, 391, 187, 699, 717, 831; 1893, 283, 373, 951; 1894, 167, 287, 427, 969, 982; 1895, 174, 376; 1896, 140, 273, 300, 477, 552, 680; 1897, 253, 348, 374, 550, 774; 1898, 174, 483, 685, 864, 954; 1899, 107, 387, 613; 1900, 378, 383, 472, 768, 1105, 1148; 1902, 182, 193, 199, 367, 419, 720, 785; 1903, 790, 1017, 1098, 1259; 1904, 124, 305, 451, 726, 773, 1107, 1113; 1905, 18, 246, 299, 340, 344, 391, 683, 692, 1121, 1217, 1322; 1906, 398, 604, 650, 999, 1000, 1125, 1167; 1907, 28, 480; 1908, 516, 824, 913; Chem. Abst., 1909, **3**, 223, 819, 1322, 2196, 2484.

Commercial Uses. Until the manufacture of amyl acetate became a distinct industry, the uses of fusel oil, both commercial and rectified, were limited to the extraction of alkaloids, the preparation of a few dyestuffs, and as a synthetic source for valeric acid, the valerates and the so-called amylic ethers. Although proposed many times as a solvent for resins in spirit varnishes [1], its use did not meet with much approval at first, mainly on account of the odor and low volatility. Cyanine or quinoline blue,[2] a color used quite extensively as a silk dyestuff, may be produced by treating quinoline or its homologues with amyl iodode and neutralizing. When anhydrous oxalic acid is heated with amyldiphenylamine, a bluish substantive dyestuff results, the amyl halides required in the intermediate steps of manufacture being obtained from fusel oil. In the production of methyl and ethyl green from methyl violet and the rhodulines, one method of purifying the crude dyestuff is by agitating its aqueous solution with amyl alcohol.[3] H. Briem has suggested fusel oil obtained from the fermentation of beet sugar molasses as crude material for the production of illuminating gas of superior quality, and in 1880 [4] reported that several German factories had introduced the process and apparently with satisfactory results.[5] Valeraldehyde and valeric acid result from the careful oxidation of the amyl alcohols, potassium bichromate being usually taken as the oxidizing agent. The valerianates find extensive use in medicine and pharmacy as nervous sedatives.[6] Pental (trimethylethylene), one of the amylenes, a local anesthetic and hypnotic, is derived from the reduction of amyl alcohol by heating with zinc chloride. Prior to 1860 this liquid was used extensively in dentistry, but owing to imperfect methods of purification, disagreeable after-results attended its use, and it gradually fell into disuse. Amyl alcohol and amyl nitrate added to nitroglycerol (gly-

1. In 1859, J. C. Fischer, E.P. 1278, obtained the first patent for an amyl alcohol containing spirit varnish, the resin specified being shellac. Sixteen years later, W. E. Pitchford obtained protection for a combination of copal with fusel oil. The next year, M. Zingler, E.P. 215, published his process for the dissolution of the softer copals, in which the fusel oil was assisted by acetic or nitrous acid.

2. A. W. Hoffman, E.P. 1291, 1863.

3. Organ des Central-Vereins für Rubenzucker-Ind. in der Oest. Ung. Monarchie, 1877, 180; 1879, 265.

4. Ibid., 1880, 20. For cobalt reaction of Danziger by means of amyl alcohol, ammonium thioacetate and stannous chloride, see Pharm. Centralh., 1902, **43**, 369.

5. One factory was a distillery, where a value of but eight cents a gallon was placed on the crude oil.

6. Amyl alcohol enters into various pharmaceutical products, as the urethanes (F. Bayer, E.P. 25069, 1899), carbamic esters of secondary alcohols (E.P. 18802, 1899), vanillin (E.P. 22351, 1895), carbamic esters of acidylamidophenols (E.P. 24901, 1894), acetyl salicylic acid (E.P. 14699, 1902), acetyl-*p*-oxyphenylurethanes (E.P. 22757, 1892), and diphenylhydrazine (E.P. 1216, 1894). For patented process of increasing the dynamic energy of amyl alcohol by the addition of small amounts of nitrobenzene, see F. de Mare, D.R.P. 154575, 1902.

cerol trinitrate) form E. Liebert's process [1] for diminishing the sensitiveness of the latter to cold and concussion. An antifouling composition for ships' bottoms has been proposed,[2] composed of zinc dust, shellac and amyl alcohol, said to be exceedingly resistant toward sea water. Amyl alcohol has been made the basis for a process of purification of mineral oils,[3] wherein the latter are purified from asphaltic and tarry matters. By mixing the crude oil with fusel oil, the latter dissolves the mineral oil mixture, but not the tar. The mineral oils are recovered from the fusel oil by distillation.[4] In the early seventies and eighties when fusel oil was cheap, the process of G. W. Bentley [5] for the extraction of oily and fatty matter from wool and cotton, was extensively used in England. It consisted in subjecting the material to the vapors of amyl alcohol, the latter being afterwards purified by distillation. The Gratz method [6] of preparing rubber for vulcanization depends upon treating the rubber with hot amyl alcohol mixed with water for the purpose of keeping down the temperature during vulcanization.

Junker and Degener have patented [7] a process for preventing moisture and frost collecting on window panes, which consists in applying to the glass a mixture of glycerol 10, amyl alcohol 4, and yellow amber oil 4.

The above uses of amyl alcohol are unimportant as compared with the use of fusel oil as a solvent of resins in spirit varnishes and pyroxylin lacquers, as a cellulose nitrate solvent in conjunction with camphor and the application of heat, and for conversion into amyl acetate. (See next chapter.)

Analysis of Crude Fusel Oil. The commercial examination of crude fusel oil comprises a series of approximate tests upon which, in their entirety, a judgment as to the value of the sample may be obtained. The following are the more reliable:

1. *Specific Gravity.* Is taken with an ordinary spindle, at 15.5° or 25°. The determination may be made more accurate by the use of a volumetric flask (Fig. 39) graduated from 95 to 110 cc. in 1/5 cc. By filling the weighed flask to the 100 cc. mark, and weighing, the amount found divided by 100 will give the specific gravity desired. Crude fusel oil will range from 0.81–0.835, the density increasing with increase of water and lower alcohols.

2. *Boiling Point.* 200 cc. are carefully distilled in a 300 cc. three-

1. D.R.P. 51022, 1889; so also dinitromonochlorhydrin (Isb, Chem. Tech., 1876, 22, 481).
2. M. E. DeJouge, E.P. 19160, 1890.
3. E.P. 10663, 1901.
4. E.P. 8923, 1901.
5. E.P. 2262, 1874.
6. E.P. 3889, 1906.
7. F.P. 360715, 1905.

bulb Ladenburg flask (Fig. 40) the temperature at which the first drop and each 10 cc. comes over being noted. The results are expressed in percentage with a constant heating surface, and the same speed of distillation used for each determination. An average German or Russian crude oil will give results somewhat as follows: 90–100°, 20%; 100–110°, 15%; 110–120°, 10%; 120–135°, 55%; above 135°, seldom over 5%.

3. *Lower Alcohols* (Government Test).[1] "The oil after having been washed and drawn into packages shall be thoroughly plunged

Fig. 39.—Volumetric Flask.

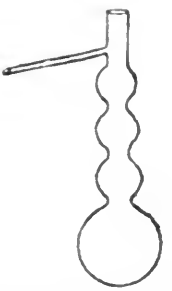

Fig. 40.—Three-bulb Ladenburg Fractionation Flask.

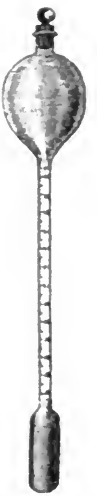

Fig. 41. U. S. Government Fusel Oil Tester.

or agitated and then specimens drawn from each package into a test tube, to be provided by the distiller, for examination. The test tube is of glass (Fig. 41), bulb shaped and closed at one end, having a graduated scale marked upon the glass in degrees from 0 near the top to near the swell of the bulb. The bulb will contain three times as 100 much liquid as that of the tube, which is graduated from 0–100°. The tube having been filled with water up to the mark 100, oil shall be added until the tube is filled to the mark 0. The oil water shall then be thoroughly mingled by violently agitating the contents of the tube. If, after sufficient time has been allowed for the oil to fully separate from the water and resume its position at the top of the tube,

1. Rules and Regulations Concerning the Tax on Distilled Spirits, under the Revised Statutes of the United States, Apr. 15, 1901, page 61.

the scale shall show that not more than 10° or 10% of the oil has disappeared or been dissolved in the water, the oil shall be passed as merchantable, that is to say, containing so minute a quantity of alcoholic spirits as not to be profitably recovered by distillation; but if over 10° of oil disappears, the oil will not be considered as sufficiently purified, and cannot be removed in that condition." This compulsory removal of lower alcohols before offering for sale, thus insuring a much more uniform product than foreign crude fusel oil, is perhaps one reason why American crude oil commands a higher price than the foreign product.

4. *Amount of Water.* 100 cc. petroleum benzine is placed in a volumetric flask (Fig. 39) and 10 cc. oil added, and vigorously shaken, the fusel oil will pass into solution in the benzine, and the major portion of the water will be precipitated and rise to the top, where, after several hours' standing, it may be read off in terms of percentage.

5. *Water Absorption.* Equal volumes water and oil are mixed, and the increase in bulk of water noted. The increase is in direct proportion to the presence of lower alcohols.

6. *Color* and amount of water separating out over night are noted.

7. *Calcium Chloride Test.* Equal parts of a saturated aqueous calcium chloride solution is mixed with the oil, thoroughly agitated and allowed to separate. The increase in volume of the calcium chloride is an indication of the amount of lower alcohols present. The increase will usually fluctuate between 10–25%.[1]

1. According to some authorities, crude fusel oil when shaken in a Rose's tube with about 3 times its volume of calcium chloride solution, sp.gr. 1.225, ought to show not less than 75% real fusel oil (insoluble), the remainder being ethyl alcohol and water. The following quantitative method is proposed for the determination of the ethyl alcohol: 50 cc. of the crude oil is shaken in a separating funnel with 100 cc. of the above calcium chloride solution, and after running off the latter, the residual oil is washed twice with 50 cc. of the calcium chloride solution. The extract and washings being mixed, 100 cc. are distilled, the volume of ethyl alcohol being calculated from the specific gravity of the distillate. For résumé of quantitative methods of determining fusel oil see W. L. Dudley, (J.A.C.S., 1908, **30**, 1271). A. S. Mitchell and C. R. Smith (U.S. Dept. of Agric.; Bull. No. 122, (1909) 199) have worked out the conditions necessary to produce definite oxidation of the various higher alcohols by alkaline potassium permanganate solution and give the following process for the determination of the higher alcohols obtained in the carbon tetrachloride extract from distilled spirits. This carbon tetrachloride solution of the alcohols, obtained as in the Allen-Marquardt process (see Schidrowitz, J.S.C.I., 1902, **21**, 815), is placed in a separating funnel, 10 cc. of potassium hydroxide solution (1:1) are added, and the mixture is cooled to a temperature of approximately 0°. Exactly 100 cc. of a 2% potassium permanganate solution are placed in a flask and also cooled to 0°, the bulk of this solution being then added to the contents of the separating funnel. The funnel is now removed from the ice-bath, its contents are shaken for 5 minutes, and allowed to stand for 30 minutes, during which time the mixture attains the ordinary temperature. One hundred cc. of hydrogen peroxide solution of a strength slightly in excess of the permanganate solution are next placed in a 1-liter Erlenmeyer flask. 100 cc. of 25% sulphuric acid are added, and the contents of the separating funnel then

Amyl Alcohol. Tests of Purity. 1. *Specific gravity* 15°/15°, 0.812–0.816.

2. *Non-volatile Matter.* 10 gm. evaporated to dryness on the water bath should leave no appreciable residue.

3. *Solubility in Water.* 5 cc. alcohol and 95 cc. water at room temperature shaken thoroughly, should not produce a clear solution. (Limit of lower alcohols).[1]

4. *Water.* Any rectified fusel oil which will mix with one or more volumes of benzine without turbidity may be considered sufficiently anhydrous for technical use.[2]

5. *Amyl Acetate and Neutral Amyl Esters.* The alcohol is agitated with an equal volume of 50% acetic acid. Amyl alcohol dissolves, any separation being neutral amyl esters (acetate, etc.)

6. *Benzine and Similar Petroleum Products.* One volume oil and 2 volumes concentrated sulphuric acid agitated, should not develop an upper colorless layer in one hour.[3] The sulphuric acid ought not to be darker than a light yellow.[4]

run in gradually with constant shaking. The funnel and the flask containing the residue of the permanganate solution are rinsed with water and the washings added to the peroxide solution. The excess of hydrogen peroxide is then titrated with an accurately standardized potassium permanganate solution containing about 10 gm. of the salt per liter. A control experiment is run at the same time, using the same amounts of the various solutions. One gm. of potassium permanganate is equal to 0.475 gm. of propyl alcohol, or 0.585 gm. of *iso*butyl alcohol, or 0.696 gm. of amyl alcohol. Consequently, the difference in the amount of permanganate consumed in the two determinations, expressed in grams and multiplied by 0.696, gives the quantity of alcohols present in terms of amyl alcohol. See Beckmann, Z. ang. Chem., 1901, **14**, 951; Z. Genuss., 1901, **4**, 1059; Chem. Ztg., 1901, **25**, 787. L. Bigelow (J.A.C.S., 1896, **18**, 397) has indexed the literature on the detection and estimation of fusel oil in spirits.

1. This test will differentiate between a fusel oil consisting of the higher boiling fractions exclusively, and one to which have been added the water-freed lower fractions. The "Bower's Test" for lower alcohols consists in shaking 2 parts fusel oil with 1 part water, and noting increase in volume of aqueous layer.

2. It is a peculiar and inconsistent fact that large users of refined amyl alcohol in the arts insist upon a product which will remain clear with two or three volumes of benzine, and will not accept an oil which will remain clear when mixed with (say) one volume of benzine, the difference being at the most only one or two-tenths per cent. of water in the fusel oil, yet they will incorporate in the same lacquer or varnish formula, wood alcohol containing 2% or 3% of water without any determination of water present in the latter.

3. It is necessary to place a time limit on this test, for it has been repeatedly demonstrated that fusel oils of unquestioned purity will give an upper layer of from 0.2–1.5% when treated with sulphuric acid in this manner. A sample of Kahlbaum's amyl alcohol for toxicological work, when examined in this manner, gave with the author 0.8% upper colorless layer after 25 hours. The liquid obtained from 3 k. of this alcohol when fractionated, boiled at 220–250° and was practically without odor. It refused to acetate.

4. According to L. Udransky (J.S.C.I., 1889, **8**, 309) amyl alcohol which gives a colorless liquid when mixed with sulphuric acid can only be prepared by repeated and troublesome treatment of the commercial preparation with concentrated sulphuric acid, and the chemically pure alcohol can only be obtained by decomposing potassium amyl sulphate.

7. *Acidity.* 5 cc. alcohol agitated with 10 cc. 0.2% neutral azolitmin in water, should not assume a decided red color.[1]

8 *For Gerber's Fat Determination.*[2] 1 cc. amyl alcohol, 10 cc. sulphuric acid and 11 cc. water mixed in a Gerber butyrometer, then centrifuged 5 minutes, should not exhibit an oily portion after standing 24 hours.

9. *Foreign Organic Matter, Furfural, etc.* An equal volume of the alcohol and concentrated sulphuric acid, when shaken together, should develop not darker than a faint pink color. Or, an equal volume of the alcohol and 20% potassium hydroxide solution shaken together, should acquire no color.

1. H. D. Richmond and J. A. Goodson (A., 1905, **47**, 77) have drawn attention to the fact that amyl alcohol is liable to contain petroleum as an impurity, owing to the use of petroleum casks for packing the alcohol, the presence of as much as 4% of petroleum having been recorded. The authors report examining a sample of commercial amyl alcohol containing about 1% of petroleum and which gave excessive results when employed for the determination of fat in milk by the Gerber method, and state that any amyl alcohol which gives any insoluble layer when 2 cc. are treated with 10 cc. of water and 10 cc. sulphuric acid should not be used for testing milk. The writer's experience is that any amyl alcohol which contains 4% petroleum, equivalent to 2 gallons, per barrel, must have been added intentionally and not incidentally.

2. Cf. N. Gerber and M. Craandijk, Milch. Ztg., 1898, **27**, 611; Chem. Centr., 1898 (5), **2**, 907; M. Prud'homme (R.G., 1900, **43**, 209) claims that a slightly alkaline solution of magenta at the ordinary temperature imparts a red color to amyl alcohol containing valeric acid, and a pink color when sodium valerate is present. He claims it is practically impossible to obtain amyl alcohol free from valeric acid or its sodium salts. For critical review of the methods of determining water and ethyl, propyl, butyl, and amyl alcohols in fusel oils, see Faustein and Bengs, Chem. Ztg., 1909, **33**, 1057; H. von Wyss, E. Herzfeld and O. Rewidzoff, Z. Physiol. Ch., 1910, **64**, 479.

JOHN HENRY STEVENS
Patentee of Amyl Acetate.

CHAPTER VI

AMYL ACETATE

Each of the possible amyl alcohols may theoretically be converted into the corresponding acetate, $C_5H_{11}C_2H_3O_2$, by replacement of OH of the alcohol by the acetic acid radical $C_2H_3O_2$. For all practical purposes, however, *iso*amyl acetate[1] is the only isomer which needs to be considered, and it is this ester which forms the major portion of commercial amyl acetate, both that used as a flavor and technically as a solvent. This is especially true if the acetate be produced from refined and not crude fusel oil.[2]

There are two distinct qualities of amyl acetate to be obtained in commerce, and intended for different purposes—purified amyl acetate made by the so-called "cold" process and technical amyl acetate produced by the "hot" process. That produced by the former process has a much more ethereal and pleasant odor, is practically free from homologous esters, and its use, which comparatively is very limited, is restricted to flavoring essences, synthetic fruit flavors, and as an ingredient in confectionery and soft drinks, and consists of nearly pure *iso*amyl acetate. It has also recently come into some prominence as a standard for photometric measurements,

1. The other isomeric amyl acetates whose properties have been studied with much certainty are: Normal amyl acetate boils at 146.7° (Gartenmeister, Ann., 1886, **233**, 260), or 148.4° at 737 mm. pressure (Lieber and Rossi, Ann., 1871, **159**, 74). Sp.gr. 0°/0°, 0.8948; 20°/20°, 0.8774. Prepared from normal amyl iodide and silver acetate. Methylpropylcarbinyl acetate boils at 133–135° (Wurtz, Ann., 1868, **148**, 132) or 134–137° (Schorlemmer, Ann., 1872, **161**, 269), sp.gr. 0°/?, 0.922. Methyl*iso*propylcarbinyl acetate, boiling point 125° (Wurtz, Ann., 1864, **129**, 367). Diethylcarbinyl acetate boils at 132° at 741 mm. with a sp.gr. of 0.909 at 0°/?. (Wagner and Saytzeff, Ann., 1875, **175**, 306). Tertiary amyl acetate, boiling at 124°, 750 mm. pressure, and with a sp.gr. of 0.891 (Flawitzsky, Ann., 1875, **179**, 348), which is decomposed by heat into amylene and acetic acid (Menschutkin, C. R., 1882, **95**, 648).

2. In the laboratory small quantities may be readily obtained by heating 1 part each of amyl alcohol and concentrated sulphuric acid, and while the heat of combination between the acid and alcohol is at its height, 1.5 parts glacial acetic acid is carefully introduced in small portions at a time by means of a separatory funnel, no external heat being applied. After the two layers have been formed the upper is decanted and after washing and neutralizing with aqueous sodium carbonate, is carefully distilled, and that portion which passes over above 132° reserved as the finished product, which will be found practically pure.

the Hefner photometric lamp giving a steadier and more reliable luminosity, it is claimed, than a standard candle. The combined use as an odoriferous fruit ether [1] and as a photometric standard is probably not over 2% of the amount produced by the "hot" process, the latter finding its principal use as a solvent. The cold process is comparatively a simple method of production, and is carried out in open, shallow earthenware or copper pans, involving no complicated or costly apparatus. The acetic acid in the free state (about 80% strength has been found the most economical to use), or more often as an acetate, sodium acetate being used almost exclusively, is mixed with rectified fusel oil, in which the lower boiling alcohols have been eliminated by careful fractionation. Sulphuric acid is added as a dehydrating agent only, to combine with the water eliminated in the interaction between alcohol and acid if free acetic acid be used, or in addition to combine with the base if an acetate be employed. The usual proportions are 200 parts by weight sodium acetate containing 3 molecules of water of crystallization, 110 parts of carefully rectified fusel oil and 85 parts of oil of vitriol 66° Bé. (about 93.5% absolute sulphuric acid). Where the acetic acid used is above 80% in strength, it has been found that the ester yield per unit acetic acid introduced is diminished, and hence the process becomes more expensive.[2] The fusel oil is placed in the open pot, sulphuric acid added gradually and with continual agitation. If acetic acid be used it is introduced gradually and at the last, whereas an alkaline acetate is placed in the converter first and the fusel oil-vitriol fraction added in small portions at short intervals with frequent and thorough agitation. Combination occurs at once, the mixed amyl alcohol and acetate rising to the surface. After standing for some time, usually over night, the supernatant liquid is withdrawn and partially separated from the unconverted alcohol by a slow distillation, after having been entirely neutralized by the addition of a dilute alkali, usually sodium carbonate. Upon distillation an aqueous portion at first passes over, after which pure amyl acetate. The yield is about 85% of the theoretical by weight, that is, from 100 gal. refined fusel oil weighing 675 lb. there should be obtained about 850 lb. purified acetate.[3] There are still small amounts of unchanged fusel oil present, and where a liquid of exceptionally fragrant odor is desired, the amyl acetate is treated

1. Usually in combination with other esters.

2. The theoretical proportions are 88 lb. amyl alcohol, and 60 lb. absolute acetic acid, or 82 lb. anhydrous sodium acetate, 136 crystallized sodium acetate. However, in practice, it is always necessary to have 10–20% excess of acetic acid. If this was not added, but a portion of the alcohol would be transformed into acetate.

3. Calculated as amyl acetate.

again with alkaline acetate and sulphuric acid in order to further convert any remaining fusel oil into acetate.[1]

The manufacture of this ester for commercial purposes has assumed enormous proportions, requiring considerable capital, and involving a high degree of intelligence and close application to seemingly unimportant details where the maximum yield is to be obtained. It is estimated that the United States at the present time consumes annually over 450,000 gal. amyl acetate, which quantity is yearly increasing. The ramifications of the application of the cellulose nitrates, opening up possibilities practically limitless, has steadily increased a demand which has never been satisfied by the production.

The continual rise in price of crude fusel oil without a corresponding increase in the selling price of amyl acetate, has necessitated the introduction of many refinements looking toward an increase in yield from a given amount of fusel oil. Free acetic acid is now no longer used as the source of acetic acid on account of the cost as compared with acetate of lime. Manufacturers have been compelled to recover solvent dissolved in the aqueous portions, and to regenerate the excess of acetic acid required in the process. The commercial manufacture of amyl acetate as at present carried on, is given somewhat in detail, on account of the almost entire absence of reliable information on this important solvent, its rapidly increasing prominence in a progressing industry, coupled with the fact that to-day it is the most important and extensively used liquid cellulose nitrate solvent.

Charging the Still. For the sake of convenience and uniformity, the following description is based upon a charge of 100 U.S. gal. (3875 l.) fusel oil.[2] The equivalent of 800 lb. oil of vitrol of 66°

1. Some manufacturers seek to improve the acceptability of the odor of the acetate by first distilling the fusel oil with about 1% potassium bichromate and 3% sulphuric acid. A small part of the amyl alcohol passes into valeraldehyde and then into valeric acid. Upon subsequent esterification, amyl acetate mixed with a small quantity of amyl valerate is produced, and a more fragrant bouquet is thought to result. See H. Trimble, Am. Jour. Pharm., 1887, 59, 275.

2. This necessitates a still of about 400 gal. capacity to the upper rim, being roughly about four times that of the fusel oil introduced. Where fusel oil is imported, as is the custom in the United States, there is always a considerable discrepancy between the quantities billed and received. The crude oil is usually imported in wooden casks or hogsheads, and losses from leakage during transportation are considerable. Importation in iron drums is not feasible, both from the high initial cost of the drums and the cost in forwarding back to the foreign port, but usually because they are in such a rusted and filthy condition as to be practically useless as lacquer or solvent containers for use in the trade. In order to minimize loss from evaporation and produce a fairly uniform sample, the contents of the containers are run into large iron tanks until used. The casks after the liquid has been entirely emptied out, are placed over a live steam jet, and the inside thoroughly steamed. In this manner from the condensed steam is recovered from each cask ½ to ¾ gal. crude oil of more value than the selling price of the empty casks. The recovery of

Bé. strength [1] but reduced to 63° Bé.[2] is previously mixed in a separate iron or lead pot with the fusel oil, preferably crude,[3] and allowed to

fusel oil and other alcohols from casks and other wooden containers by steaming has been recently patented by J. Gilchrist (U.S.P. 951110, 1910) and Wm. Miller (U.S.P. 951328, 951507, 1910). The discrepancy between the weight of oil as billed and received will vary between wide limits, some casks being received not over half full. In general, the combined shortage varies within the limits of 4–7%, and occasionally reaches as high a figure as 10%, although the latter must be considered excessive. The crude oil as received varies greatly in composition in the individual containers from the same shipment, although casks of same size and shape as indicating an individual lot or consignment from one place, will be quite uniform in composition. The general storage tank is thoroughly agitated after filling, a sample withdrawn for laboratory examination, from which the ratio of higher and lower alcohols is determined, and the conversion process into acetate varied accordingly.

1. This is equivalent to about 750 lb. absolute sulphuric acid. It is difficult to procure oil of vitrol of 63° Bé. strength in the American market, which necessitates the reduction of the 66° Bé. strength. Where the 66° Bé. acid is used, the heat of reaction between the crude oil is so intense that loss from evolution of lower alcohol fumes usually occurs. Furthermore, the stronger sulphuric acid is reduced by the small amounts of tar present in the acetate of lime, sulphur dioxide is evolved, and disagreeable sulphur-containing compounds result which distill over with the amyl acetate, and are removed therefrom only with great difficulty.

2. The object in mixing the fusel oil and oil of vitrol separately and some hours previous to introduction into the still is that the reaction of the acid upon the alcohol results in the formation of amyl-sulphuric acid, $C_5H_{11}\cdot HSO_4$, a viscid red, or reddish-brown product soluble in water and alcohol, which from thermochemical considerations and the support of actual experience causes a larger percentage of the fusel oil to acetate when brought in contact with the calcium acetate than if the acetate and vitriol were first brought into contact and the fusel oil then added. When the amyl-sulphuric acid comes in contact with the calcium acetate, interaction ensues, calcium sulphate is precipitated, and amyl and the acetic acid radical *in statu nascendi*, as it were, are brought together in a condition most favorable for union. The sulphuric acid, of course, must be largely in excess of the actual amount required to unite with the calcium and form sulphate of lime. There must be a sufficiently large excess of acid present to exert a marked dehydrating effect, as in other reactions for the formation of similar esters, where the reaction soon ceases through the liberation of water, unless a powerful dehydrating agent be continually present to overcome the dilution of the reacting mixture. As is usual in esterifications of this nature, the reaction never takes place to any degree in quantitative proportions unless in the presence of a strong dehydrating agent, for as soon as a certain quantity of water is liberated, the latter saponifies the ester back to the original alcohol, and a period of equilibrium in ester formation results in the reacting system. In order to reduce the quantity of vitriol employed to 63° Bé. strength (86% acid), 70 lb. water is added. It is a fact that where rectified fusel oil rather than the crude is used, reduction of the acid by the furfural and other constituents is much less noticeable if not entirely absent. The problem of sufficient dehydration is of much more importance in this process than if acetic acid in the free state were used, instead of acetate of lime, the saponifying action of the increased amount of water liberated would be much more evident, and especially owing to the long-continued heating at the elevated temperature. According to the patented process of Wilson (E.P. 4669, 1885) the sulphuric acid may with advantage be replaced by hydrochloric acid, but in practice it has been found that chlorine substitution products of a disagreeable odor result, the yield is unsatisfactory, and the finished solvent prone to turn yellow and become acid upon exposure to light and air. The great advantage claimed for this process is the formation of calcium chloride with the acetate of lime, the chloride being readily soluble in water and a dehydrating agent.

3. Crude fusel oil is used by the majority of American manufacturers on account of the fact that the yield (see this) appears to be just as high as with refined oil. Although a larger proportion of lower acetates is dissolved in the aqueous portion

remain from 12–24 hours.[1] Into the still is first placed 900 lb. gray acetate of lime,[2] the fusel oil-vitriol mixture run in, usually stirred by hand,[3] after which the cover to the manhole is luted on.[4] By means of a two-blade agitator[5] the contents is kept in slow motion, and heat is gradually[6] turned on

of each fraction of the distillate, yet the percentage increase by weight of a given amount of the lower alcohols is more than counterbalanced by their increased solubility. Furthermore, the cost of refined fusel oil is at least 20% more than the original crude oil from which it was fractionated. A refined fusel oil produces a less disagreeable smelling acetate.

1. The temperature of union raises the oil-vitriol mixture to 90–95°, and if this hot mass was run into a still containing acetate of lime, serious loss from volatilization might result. It is customary, where the acetate is manufactured continuously, to combine the oil and vitrol immediately after one charge is run into the still, when it then has from 12–15 hours in which to cool. The mixing tank must be tightly covered to avoid loss of lower alcohols, and especially is this true when the crude oil is employed.

2. Although per unit content of acetic acid the brown acetate of lime is much less expensive, yet the presence of tarry matters so inhibits the union of acetic acid and amyl alcohol that at the present day it is seldom if ever used in this process. The lowering of the yield of acetate is much greater than the saving in cost of acetic acid. On the assumption that the acetate of lime assays available acetic acid equivalent to 82% calcium acetate (the usual strength), and that the 100 gal. fusel oil consisted entirely of amyl alcohol, the theoretical amount of acetic acid required for union would be 474 lb., assuming a sp.gr. of 0.815 for the fusel oil. As 800 lb. acetate lime of 82% calcium acetate is equivalent to 551 lb. absolute acetic acid, it is evident the above charge contains about 15% acetic acid in excess, and this proportion has been found to give the largest yields. It is impossible to calculate in advance with any high degree of accuracy the proportion of fusel oil to acetic acid, due to the varying nature and composition of the former. The more lower alcohols contained in the fusel oil, the larger the quantity of acetic acid required for combination. A comparatively high excess of acid has been found necessary that the finished product shall be high in ester, i.e., that the minimum of fusel oil will pass through the process unchanged. Until recently the acetic acid was the most expensive ingredient entering into the process, and where the uncombined acetic acid is not subsequently recovered, acetate of lime over the theoretical quantity must be exceeded but slightly. Where this is practiced it is impossible to produce a finished solvent which will assay acetic acid equivalent to 97–99% amyl acetate, unless a large proportion of lower boiling point esters be present, to raise the apparent per cent.

3. In order to prevent caking of the precipitated calcium sulphate.

4. First a luting of clay or cement is made with water, the cover laid over this and then screwed or bolted fast. As soon as the heat of the still drives the moisture from the lute, it bakes to a hard and non-porous mass.

5. It is an open question as to whether a mechanical agitator is or is not desirable. It is generally conceded that the continual agitation of the still contents aids in a more complete union of acid and alcohol, but the presence of an agitator in the still necessitates obtaining the heat by means of a double jacket. It has been found that the largest item of expense in maintaining a still of this construction is the wearing out of the inner steam jacket due to the galvanic action produced by the heat on one side and the sulphuric acid on the other side of the copper sheet. For this reason, heating the still contents by means of steam coils does not cost more for maintenance, the life of the still is more than doubled, and imperfections in the lower steam jacket, which is usually cast-iron, do not become apparent.

6. If the agitator be started before the cover is affixed or the fusel oil-vitriol mixture entirely run in, the sudden reaction may cause the evolution of a large volume of fumes, and loss therefrom due to evaporation. Those who have had experience realize how important it is to gradually place the heat on the still contents, as any sudden application of heat may cause an ebullition greater than the capacity of the gooseneck to receive it, with the result of danger in blowing off the

the still.[1] The heat of reaction is usually so great that but little external heat is required to place the contents of the still in active ebullition, the steam pressure being gradually increased as distillation proceeds, the temperature of the interior of the still, however, as indicated by a thermometer inserted therein from the top, seldom rising above 115°.

When a steam jet is introduced into the still in order to distill the acetate with live steam, the temperature of the still contents does not rise to such a height as where the jacketed steam is the sole source of heat. The first portion of the distillation process is necessarily slower than the last, due to the large bulk of fluid in the still and the necessity of the cautious application of heat in order that the still contents may not go over in a solid stream by suction. As the still contents lower in volume from distillate passed over, the volume of steam admitted to the jacket or inside coil is gradually increased.

In order to obtain the maximum union of alcohol and acid in ester formation, it is of decided advantage that the head of the still terminate in a Y-shaped copper pipe, both containing valve shut-offs. One pipe leads to a reflux condenser in which the vapors are condensed and run back. The object of this is to preliminarily heat the fusel oil-acetic acid mixture to the highest point where the reflux condenser will entirely condense the vapors, this preliminary heating being continued from one to three hours before actual distillation is allowed to commence. Practice has shown that this preliminary aid to esterification not only tends to increase the volume of the final yield, but produces an amyl acetate higher in absolute ester than where the preliminary heating under a reflux condenser is omitted.

The top of the reflux condenser terminates in a small copper tube of about ¼ in. diameter, formed by successive bushing down of the larger pipe. This is so located as to be readily observed, the heat on the still being kept at the maximum temperature which will not cause liquid to run out of the reflux condenser termination. It has been found that heating the still contents for a too long period, especially where brown acetate of lime is used, or with gray acetate if the tarry products therein are unduly high, that incipient decomposition of the sulphuric acid takes place, the odor of sulphur dioxide is much in evidence, and the finished acetate is apt to take on a peculiar odor due to combination with small

top of the still. After the peculiar rumble caused by steady ebullition has commenced, danger from sudden spurting is usually past.

1. It is necessary to carry at least 90 lb. steam pressure in order to distill the contents with economical rapidity.

amounts of sulphur. After heating the still contents in this manner the desired length of time, the valve in the reflux condenser portion is shut off, the goose-neck valve opened, and there begins to pass over into the receiving tank, the

First Fraction.[2] This is usually arbitrarily considered as all that portion of the distillate which can be and is driven over by the unaided heat of the steam, either in coil or jacket, and without direct steam being introduced into the still contents; that is, all that can be obtained by direct steam distillation. It is usual for 1 or 2 gal. of clear acetate to pass over at the commencement of the distillation.[3] The volume of the distillate will vary in direct proportion to the steam pressure, and as to whether a crude or refined fusel oil was used.[4] In general, 50–60 gal. of aqueous layer, and about 125 gal. of oily layer will comprise the fraction,[5] the former being greatly

1. There is apparently strong experimental proof to corroborate the statement that heating with a reflux condenser increases materially the esterification of the alcohol. Some authorities have contended that the union of alcohol and acid was practically instantaneous and that further heating might induce reversible reactions and regeneration of unchanged alcohol. With amyl alcohol, laboratory experiments do not substantiate this assertion. Above four hours, however, it is doubtful if additional heating with reflux condenser increases the union of alcohol and acid, at least not enough to more than offset cost of heat and wear of still. The temperature inside the still fluctuates between 96–98° during this preliminary heating, and seldom rises above 100°. The maximum heat is given which will not distill the contents of the still. With an agitator, the contents of the still is kept in slow motion continually during this period.

2. The reason for the separation of the distillate into two or more fractions is well founded. The solubility in water of the alcohols and their corresponding acetates increases with decreased molecular weight and boiling point, i.e., the more soluble alcohols and acetates pass over first. The acetates have a higher boiling point and lower solubility in water than the corresponding alcohols from which they are derived. It will be noted from an inspection of the relative amounts of aqueous and oily distillate in the two fractions obtained, that by means of a separation into fractions, the more soluble acetates and unconverted alcohols pass over with a much lower ratio of water than if the total distillate consisted of but one fraction. Therefore the yield is obviously increased by a separation into fractions. Furthermore, the aqueous portion of the second fraction will always dissolve the oily layer of the first fraction. Calculated in terms of percentage, in the first fraction there is twice as much by volume of acetate as water, and in the second fraction ten times more water than acetate.

3. Being usually that acetate which had accumulated in the columns and condenser worm of the still during the preliminary heating.

4. That is, with a crude oil the first fraction will be considerably increased. If an agitator be used, the relative amounts of water and oily portion in the first fraction is materially changed, the agitation exposing new surfaces to distillation, and preventing in a great measure occlusion of amyl acetate in the precipitated calcium sulphate by "pocketing." This variation in the volume of fractions is especially noticeable where refined fusel oil is used in preference to the crude.

5. Some manufacturers of amyl acetate renew periodically the volume of water in the still so that it remains fairly constant during the passing of the first fraction. The empyreumatic products normally present in acetate of lime combined with the elevated temperature, cause a reduction of the sulphuric acid and evolution of SO_2. The addition of water to the still inhibits this. Where water is added directly, it is previously heated to boiling, so as not to impede distillation by a reduction of still temperature. The disadvantage of adding water is that it adds water directly

increased in amount with a higher steam pressure. The watery portion will contain 12–15% free acetic acid and the oily layer 6–8%. This fraction is kept separate from the balance of the distillate.

Second Fraction. When in the direct steam distillation the oily layer comprises not over 10% of the total distillate, a jet of live steam is turned on the still contents, and the distillate allowed to flow into a separate tank, being continued in this manner until the aqueous portion consists of from 98–99% of the distillate passing over. This fraction will consist of about 75 gal. of water carrying 4–5% acetic acid, and 5–10 gal. oily layer with 1–2% acetic acid. The passing over of this portion occupies much less time than in the distillation of the first fraction. In general, about 12 charges per kettle are run each week of 6 days of 24 hours each.

Bottoms.[1] The residue remaining in the still[2] is immediately discharged through the tap at the bottom, as soon as distillation has ceased. It is received in a dump cart, and discarded as being of no further value.[3]

Aqueous Distillate. The watery layer of the first fraction is kept separate from that of the second, but otherwise similarly treated. The liquid is drawn to a tank on the floor below, which is usually earthernware or copper, where solid[4] sodium carbonate or other alkali[5]

to the process, which water has a solvent action on the acetate and also adds bulk which must be subsequently treated. The selection of an acetate low in tar will materially reduce this difficulty. Any water introduced has to be subsequently neutralized, distilled for solvent recovery, and finally evaporated to crystallization to recover neutralized acetic acid present, each process introduced requiring time and power and involving loss of material.

1. Often when the bottoms have cooled an oily pellicle is visible on the surface, which is not alcohol or acetate, but is soluble in cold water and consists of sulphuric acid. A properly conducted distillation will have eliminated entirely any discernible amyl acetate or alcohol from the still contents. Steam is usually blown in the still while the bottoms are being discharged to clear from the sides any tar which may have adhered. Where brown acetate of lime is used, it frequently becomes necessary to remove the adhering tar from the sides of the still with a hammer and chisel. It requires but a thin layer of tar to so insulate the still as to seriously impede distillation by a reduction of temperature. This applies also to steam coils. The bottoms consist of sulphate of lime, sulphuric acid, water and tarry matter, and make excellent material for country roads. The tar acts as a cementing material for the sulphate of lime, while the gradual leaching out of the sulphuric acid by rain destroys vegetation and keeps the ditches free from weeds. The material packs firmly, and such a road is usually free from dust. The most apparent disadvantage is the retention of the fusel oil odor, which persists for a long time.

2. There is usually present in the aqueous portion of the bottoms less than 0.5% acetic acid if the distillation be properly conducted.

3. Attempts to recover and use again the sulphuric acid have been unsuccessful in the author's experience, due to the low cost of the vitriol.

4. In order to obviate the necessity of adding water, the idea being to reduce as much as possible the volume of water required in the whole process. There is more than sufficient liquid present in the distillate to dissolve the sodium carbonate required for complete neutralization.

5. More inexpensive neutralizants have from time to time been proposed, such

is added to an alkaline reaction with litmus,[1] being usually stirred in by hand with a paddle. After allowing the solution to stand for some hours, during which a light layer of acetate forms on the top and is removed, the solution is run directly into the column still, Fig. 37, similar to that used in the manufacture of ether from ethyl alcohol. The separator *C* contains water kept at a temperature of 75–80°, whereby the water falls back into the still through the passage *D* and the lighter boiling acetates and unchanged lighter alcohols pass over through the bend *E*, being condensed in the worm *F*, through which cold water circulates. The cool liquid is withdrawn at *G*.[2] The distillate may advantageously be collected in several distinct portions.[3] After allowing the water to separate by standing, the several oily portions are united, dehydrated by agitation in the cold with solid calcium chloride,

as native Franklinite (zinc carbonate), plentiful in New Jersey and other sections of the country. Limestone has been suggested, but is too feeble and a carbonate has to be used in addition. This requires as much carbonate as if no lime had been used, for the sodium carbonate first neutralizes any calcium acetate which may have resulted from the action of the limestone upon the free acetic acid, precipitates the lime as calcium carbonate, and afterwards neutralizes what free acetic acid may be left. Quicklime has met with more favor, especially in neutralizing the aqueous portion of the first fraction. It cannot be used without first water-slaking, on account of the intense heat developed. It has been found that water-slaked quicklime will completely neutralize the aqueous portion to a decided alkaline reaction with azolitmin, and can be evaporated to dryness and the calcium acetate recovered without difficulty. Franklin sand appears to offer the advantage that should traces of sulphuric acid be mechanically carried over in the distillation process no precipitation upon neutralization would ensue, on account of the ready solubility of zinc sulphate in water as compared with the analogous calcium salt. The alkali hydroxides are unsuitable on account of their ready saponifying action. Native dolomite (calcium, magnesium carbonate), easily procurable in some sections, has been proposed. Magnesite (magnesium carbonate) appears to be too feeble without the assistance of a stronger alkali, and sodium hydroxide has been proposed to assist it, on account of the fact that magnesium hydroxide which would be formed is distinctly alkaline itself. There is an advantage with an insoluble material as limestone or quicklime, in that any excess remains out of solution and can be used at a subsequent time, whereas with a water-soluble salt the entire amount passes into solution and is temporarily lost.

1. Neutralization materially heats the solution, often to 60–70°, which indicates neutralization should be gradual in order to keep the temperature down, and also the use of tightly fitting covers to guard against loss from evaporation.

2. It is necessary in this distillation to keep the heat carefully regulated in order to obtain the maximum of solvent mixed with the water. The total amount of liquid is reduced about one-half in the still, before the gravity of the distillate indicates that pure water only is being recovered. The cost of distilling in this manner in practically *nil* where the solution is finally evaporated to dryness to recover the alkaline acetates.

3. On account of variations in solubility, the first fractions where crude oil is used consist largely of ethyl and propyl acetates and alcohols, and these are completely soluble in not over 15 volumes of water at room temperature. The aqueous portion of each distillate is returned to the still to be re-fractionated, and the contained solvents recovered. It often occurs in the distillation of liquids containing a small portion of alkali, where the latter is difficultly soluble in the former, that a thin layer of salt will form on the sides of the still and so impede distillation as to necessitate its removal before the process can be continued.

and finally purified by rectification alone.[1] This portion is finally added to the rectified amyl acetate from the original process, and the combined fractions sold or used as commercial amyl acetate.[2]

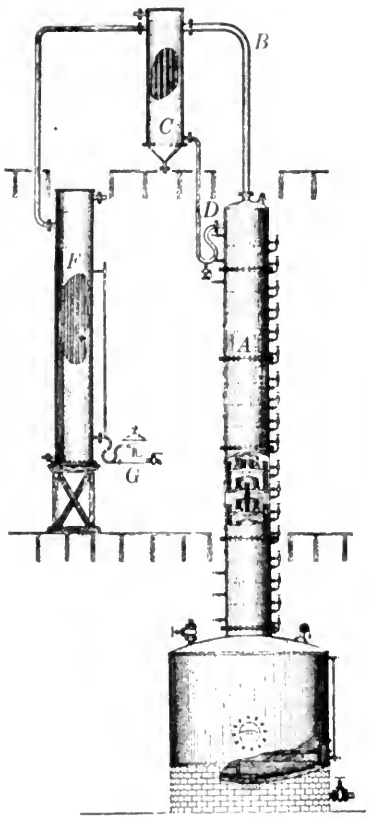

FIG. 37.—Represents a Spirit Rectifying Apparatus for the recovery of lower alcohols and acetates from aqueous solutions, as designed by the Vulcan Copper Works, Cincinnati, O. The liquid is introduced into the still, where the vapor passes through the external tubular condenser *A*, through the pipe *B* and into the separator *C*. Water is kept at any desired temperature in this separator, whereby the aqueous portion of the distillate is cooled to the liquid form, and condensing, passes back into the still through the pipe *D*, the uncondensed vapor of alcohol and acetate passing through *E* into the final condenser *F*, where it is finally drawn off at the divider *G*.

1. The separation of the calcium chloride layer is clear-cut and distinct. This portion is usually not submitted to solvent recovery by distillation, it having been found too poor in solvent. It has been suggested to use the chloride solution for road sprinkling (H. Schrieb, Chem. Ztg., 1907, **31**, 841) or for refrigeration purposes.

2. Strictly speaking, this comprises all the products obtainable from the acetation of crude or refined fusel oil, irrespective of the composition of the latter. With refined fusel oil as the starting point, the yield of lower acetate by distillation of this neutralized aqueous portion is seldom over 2%, while with crude fusel oil from 4–8% may be considered the average amount regenerated. The yield of the aqueous portion of the second fraction with crude oil as the starting point is from 1–3%, while with refined oil the amount is too small for profitable recovery. Considerable discrepancy in obtaining uniform and easily duplicated results in the commercial processes in which amyl acetate enters is undoubtedly due to the varying nature of the commercial acetate used and the inability—except in a few instances—of obtaining commercial acetates of fairly constant composition as regards the proportion of higher and lower alcohols contained therein.

Oily Distillate. The amyl acetate layer of the first fraction should be neutralized separately. The acetate is first agitated with dry soda ash as long as effervescence continues, and then treated with a hot solution of soda ash with vigorous stirring, until a sample taken out and washed titrates not over 0.03% acetic acid, phenolphthalein being used as indicator.[1] The second oily fraction, being so small in comparison to the first, is usually allowed to accumulate until sufficient has been obtained to make neutralization advisable. The several neutral portions when united and allowed to clarify from subsidence of water, will average 122–135 gal.[2]

Recovery of Acetic Acid. The neutralized acetic acid from the aqueous and oily portions, having first been distilled to recover dissolved alcohols and acetates, is allowed to cool and then transferred by hand or pumped without cooling to shallow evaporating pans, heated by means of exhaust steam and further concentrated. The slight alkalinity due to excess of carbonate is overcome by the cautious addition of weak acetic acid[3] the evaporation being continued nearly to dryness, either with partial vacuum, or more often at normal pressure. When the concentration reaches a point where the salt deposits

1. It is of great importance in the preparation of lacquers for polished metallic surfaces, as that of brass and the bronzes, that the solvents used be as free from acid as possible. Commercial amyl acetate is never neutral. When titrated with a delicate indicator the amount of free acid will usually fall between the limits 0.01–0.025%. It has been found that the addition of 0.01% acetic acid in a lacquer formula intended for application to a copper-containing alloy, has no visible effect on the metal. Lacquers intended for this purpose seldom contain to exceed 50% amyl acetate, therefore on this basis there is an allowance of 0.02% acetic acid in the free state, which if present, cannot be recognized by an altered appearance of the metal. There is always a peculiar dark-colored layer at the line of demarcation between aqueous and oily portion, composed principally of acetate, but containing in addition solid matter in suspension, and which is removable with difficulty by filtration. This layer is siphoned off and treated separately. It is either allowed to settle for a number of days, and the supernatant layer skimmed off, centrifuged through heavy piano felt, or returned to a receiver containing unneutralized acetate. The increase in yield of amyl acetate cannot be attributed to the success of one definite process, but rather upon careful and constant attention to minor details as regards losses by evaporation and the recovery of solvents from aqueous solution, as well as the excess of acetic acid required to produce an acetate high in amyl ester.

2. The amount of free acetic acid in suspension will cause this to swell to 130–137 gal. before neutralization.

3. If an excess of soda ash be used, the solubility of this salt as compared with sodium acetate is so much less, that the carbonate will reach a point of saturation and precipitate on the steam pipes long before the acetate reaches a concentration at which it will solidify on cooling. The deposition of the carbonate insulates the heating surface and impedes evaporation. It is therefore necessary to free the solution from carbonate, which is done with acetic acid, usually an unneutralized aqueous distillate. The product finally obtained is sodium acetate with 3 molecules of water of crystallization, tinged green from copper dissolved from the still, and containing in addition 25–50% moisture. It may be used for amyl acetate production either by itself or mixed with acetate of lime. It is a peculiar fact, but a charge of sodium acetate obtained in this manner will effectually remove the tar from the interior of an acetate still.

on the sides of the evaporators and steam pipes and impedes further concentration, the liquor is withdrawn and left to solidify on cooling.[1]

Redistilling the Amyl Acetate. The crude but neutral acetate must be rectified in a different still from that used in its formation,[2] being distilled alone without addition of any chemical. Approximately the first distills over of a milky color from which water separates on standing. This portion is dehydrated with calcium chloride, the solvent in solution recovered by distillation, similarly to the original acetate. The second portion consists of acetate which comes over clear but which reacts turbid with a small amount of benzine, thus indicating excess of water, while that portion comprising the third fraction is the commercially acceptable solvent. The amount left in the still is very small and is never given special treatment, being usually redistilled with another fraction. These bottoms seldom exceed 2% of the original crude acetate.[3] That portion which remains clear when twice its volume of benzine is added is usually considered as acceptable to the trade.[4]

Yields. The yield of amyl acetate depends primarily upon strict attention to comparatively unimportant details, and to the ability of the superintendent to modify the process to accord with the composition of the fusel oil at his disposal. Upon theoretical considerations, 100 parts by weight of methyl, ethyl, propyl, butyl and amyl alcohols when converted into their corresponding acetates, give a yield of 231, 191.3, 170, 155.8, and 147.7% by weight respectively, i.e., with increasing molecular weight of the alcohol the increment of increase in passing into acetate diminishes. Where the alcohol to be converted is refined fusel oil, and this may be assumed to mean

1. It is evaporated to a density of 22° Bé.

2. On account of the acidity and presence of tar both in the still, in the condensers, and throughout the apparatus.

3. The trade has been educated by certain manufacturers who happen to produce an amyl acetate which will remain clear when mixed with an indefinite amount of benzine, to regard the moisture indicated by the addition of one or more volumes of benzine as a criterion of the purity and strength of the solvent, and as of paramount importance in judging of quality. As a matter of fact, the difference between an acetate which requires one, and another which requires, say, three volumes benzine to induce opalescence, is at most a matter of but a few hundredths per cent of water—an entirely negligible quantity. The pyroxylin which may be used with this solvent may vary within 3% of contained water, without apparently exciting interest.

4. They may be disposed of in various ways, the most satisfactory being, perhaps, to allow them to remain in the still and be fractionated with the next portion. Or they may be distilled with live steam (blown over) which will produce a light-colored acetate, suitable for pyroxylin-resin lacquers. It has been advocated, where large quantities of amyl acetate are being produced, to accumulate these high-boiling products, and periodically distill them, with a free flame. The first or "milky" fraction is allowed to settle, until the acetate layer becomes clear, when the acetate is dehydrated, and distilled again in the usual manner.

amyl alcohol, the yield by weight is less than if mixed alcohols be used, and the apparent decrease in yield reported by manufacturers using crude oil must be accounted for either by an abnormal amount of water in the crude oil or incomplete methods of recovery of dissolved solvent in the several aqueous portions incident to the final purification. The only point of advantage in using refined fusel oil is the decreased solubility of the same and the acetate in water.[1] The lower acetates exceed in speed as pyroxylin solvents, although their more

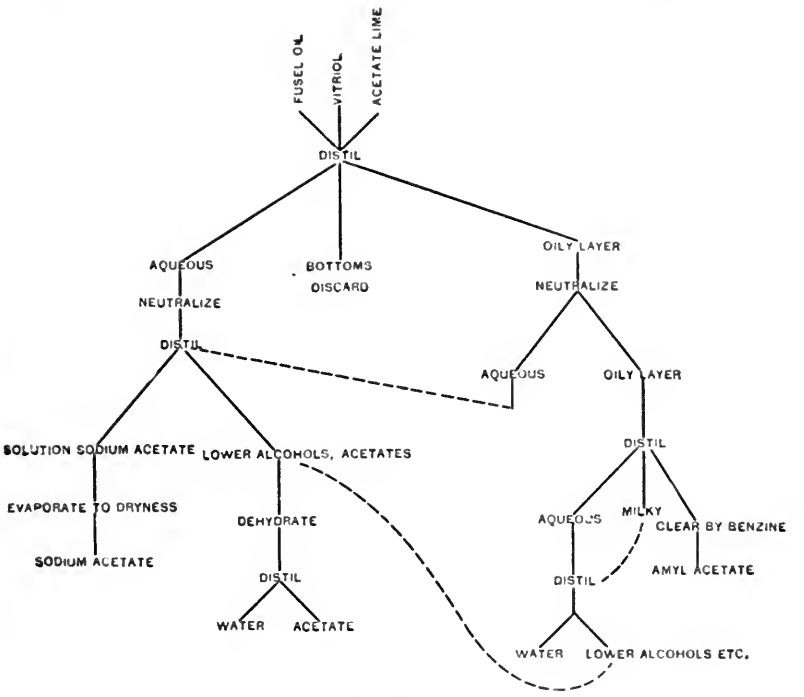

FIG. 44.—The Commercial Manufacture of Amyl Acetate.

rapid evaporation precludes their use alone. This point is of considerable moment in the coating of real leather (which see), where a slow and uniformly evaporating solvent is a prerequisite to the proper application of the pyroxylin. If the author's personal experience is a trustworthy criterion, the German and Russian crude fusel oil as it arrives in the United States is capable of producing a larger yield of combined acetate than if the water and lower alcohols be removed and refined fusel oil be used instead. The use of crude

1. The odor, of course, is less disagreeable. Amyl acetate is also known as "pear drops" and "banana oil."

or refined oil is partly governed by the market price of the crude oil. Several years ago, when fusel oil and wood alcohol both commanded about the same price, it was of advantage to first make a preliminary distillation of the crude oil and sell the lighter fractions as shellac and other resin solvents. "Lightno," "LX9," and "Berry's Best" are trade names applied to these lighter alcohols. The first fraction at that time brought a higher price than the crude oil, on account of it being more nearly dehydrated, transparent, of less disagreeable odor and an excellent solvent. The advantage over wood alcohol came from a lower volatility and absence of absorption of moisture from the air during drying. The economic conditions have now changed to such an extent that the first fraction must be utilized in amyl acetate production, and the complaint of some branches which employ amyl acetate, that the quality has been gradually diminishing, appears to be founded on fact in those instances where a high boiling ester is required. The production of amyl acetate from crude fusel oil was made compulsory by the continual rise in the cost of the latter. By general consent, any product obtained from the acetation of crude oil fusel, may with propriety be considered as commercial amyl acetate. The boiling point and proportion of various esters may therefore vary within wide limits. With a crude fusel oil of a composition similar to that given on page 129, a yield of 92% of the theoretical by weight ought to be attained continuously, where the various refinements previously outlined are taken into consideration. With crude fusel oil f.o.b. the factory costing 100, leakage, deterioration of plant, general factory expense and superintendence and cost of production all taken into consideration, it is the author's judgment that an equal weight of commercial refined amyl acetate should cost not to exceed 108. A yield of 92% of the theoretical by weight calculates to 131.3% by volume. Considerable confusion apparently exists as to the terms volume and weight as applied to these alcohols and acetates. This ensues from the fact that the density of the alcohol and corresponding acetate is not the same, so that in stating the increase in yield with, say, amyl alcohol going into the acetate there is a greater increase in per cent by weight than by volume. This is much more evident in the transformation of ethyl alcohol into ethyl acetate, for ethyl alcohol is lighter than amyl alcohol, and ethyl acetate heavier than amyl actetate.[1]

1. For instance, the specific gravity of 95% ethyl alcohol at 15.5° is 0.7906, ethyl acetate 0.92, amyl alcohol 0.845, and amyl acetate 0.879, or a U.S. gallon of each weighs 6.32, 7.36, 6.76, and 7.23 av. lb. respectively.

The amount of acetic acid in commercial amyl acetate calculates to 88–98% amyl acetate, and the wide variation is due to the amounts of lower alcohols present

Properties and Uses. Purified amyl acetate is a colorless, limpid, rather agreeable-smelling liquid of neutral reaction, of sp.gr. 0.8837 at 0°, and 0.8762 at 15°/40°,[1] boils at 138.5–139°,[2] and is difficultly soluble in water.[3] It dissolves in all proportions in alcohol, ether, chloroform and amyl alcohol, and is undoubtedly the most important and widely used of the cellulose nitrate solvents. The modern pyroxylin-lacquer industry, with its many ramifications, rests primarily upon the diversity of uses to which this solvent may be applied. It will dissolve cellulose nitrates of a greater range of nitration than any other known simple liquid. As a solvent of waxes, resins, balsams and the fixed and volatile oils, it is rather inferior to amyl alcohol. In the preparation of imitation fruit flavors it has an extensive field, the essence of Jargonelle pear being a 10% solution in purified ethyl alcohol. Combination with ethyl butyrate forms commercial banana essence. In the artificial flavors of raspberry, strawberry, gooseberry, melon, prune, etc., amyl acetate enters as an essential constituent.[4] Bergamot pear essence is 30 parts

in the fusel oil used, and to the excess of acetic acid used in the converting process. Where considerable amounts of lower acetates are present, it is quite possible to obtain an amount of acetic acid in saponifying the ester, to calculate over 100% amyl acetate—an impossibility. In acetic acid content, ethyl acetate is equivalent to 123% amyl acetate. It is a peculiar fact and worthy of note that amyl acetate of 90% strength is apparently the equal in solvent power of a similar solvent assaying 98–99% amyl acetate. It appears that insolubility as judged on a commercial scale, the introduction of the maximum quantity of the usual pyroxylin non-solvent (benzine) and in speed of solution so far as can be ascertained in the manufacture of large quantities of working formulas, no preference based upon solvent value is noticeable.

L. Paget has sought (E.P. 7784, 1893) to increase the yield by the addition of methyl alcohol and benzine or benzene to the crude fusel oil before acetation. There has been considerable experimentation along this line of mixed ester and ether formation, but as yet with no satisfactory results. (See E. Todd.) A mixed ester formed by this chemist (E.P. 7277, 1893) with amyl alcohol, sulphuric, acetic and salicylic acids, produced a mixed amyl acetate and salicylate—an excellent solvent combination—but entirely too costly for commercial use, and therefore practically valueless.

1. Mendeleeff, Jahrsb., 1860, **7**.

2. R. Schiff, Ann., 1883, **220**, 110; 1884, **223**, 77; 1886, **234**, 344.

3. According to Bancroft (Phys. Rev., 1895–1896, **3**, 131, 196, 205,) and Traube (Ber., 1884, **17**, 2304) the amyl esters are soluble in water and alcohol at 20° as follows: Amyl acetate in water, 0.2%, *iso*amyl acetate 0.2%, amyl butyrate 0.06%, amyl propionate 0.1%, *iso*amyl formate 0.3% (the latter at 22°). The solubility of *iso*amyl acetate in aqueous ethyl alcohol mixtures is as follows: When 5 cc. ethyl alcohol in each instance was mixed with the cc. water stated, the cc. *iso*amyl acetate dissolved is given, 7 cc. water, 0.41 cc. *iso*amyl acetate dissolved. 6-0.7; 5-1.31; 3.61-3.0; 3.01-4.0, and 2.60 cc. water, 5.0 cc. *iso*amyl acetate dissolved. *Iso*amyl acetate dissolves in all proportions in ether, ethyl alcohol and amyl alcohol, and is an excellent solvent for camphor, alkaloids, tannin and resins.

4. These odoriferous liquids are erroneously termed ethers, when in reality they are not ethers, but esters. The former designates the combination of an organic radical united with oxygen, or water in which the two replaceable hydrogen atoms have been substituted by organic radicals, whereas an ester is the combination of the same radical with an organic acid in which the replaceable hydrogen has been

amyl acetate, 1 part ethyl acetate and 100 parts ethyl alcohol. In order to increase the delicacy of aroma, the fusel oil used in the preparation of the acetate intended for flavors is several times distilled, and sodium acetate employed for the source of acetic acid.[1]

Whitely Williams proposed[2] and Hefner perfected[3] a standard photometric lamp designed to burn amyl acetate, claiming it as a standard illuminant and superior to candles, and also less expensive. Hefner's lamp is fitted with a solid wick completely filling a round nickel wick tube 8 mm. internal diameter and standing out free 25 mm. when the wick is saturated with amyl acetate. The wick has a known capillarity from which the velocity of consumption of acetate can be calculated in advance, and after 10 minutes' burning it is claimed a perfectly steady flame 49 mm. high above the upper edge of the wick tube, and burning in pure air, gives an illumination equivalent to one standard candle. This lamp has been widely used.[4] By U. S. Customs Decision June 16, 1894, purified amyl acetate, imported, was made dutiable at $2 a pound as a "fruit ether under paragraph 21 of the Tariff Act."

The variability in composition of commercial amyl acetate appears to increase with the scarcity and increased cost of fusel oil.[5]

Methyl Acetate occurs in crude wood vinegar,[6] and may be prepared by distilling 2 parts wood spirits and 1 part each concentrated acetic and sulphuric acids, removing excess of wood spirit by means of calcium chloride and rectifying over sodium carbonate.[7] The difficulty in preparing methyl acetate on a manufacturing scale

substituted. The ethers may be considered as organic oxides, and esters organic salts. For method of cleaning brushes with amyl acetate, see Alkohol, 1899, **9**, 290.

1. It has been used in the manufacture of a restricted class of smokeless powders, the Wetteren, for example.

2. J.S.C.I., 1885, **4**, 262.

3. Jour. f. Gasbel, 1887, **30**, 489; 1891, **34**, 265. For development of amyl acetate in photometric work see Kruss, Central Z., 1888, **9**, 31; Leibenthal, Jour. f. Gasbel, 1887, **30**, 814; Elektrot. Z., 1887, **8**, 501; Drehschmidt, Chem. Z., 1891, **15**, 313; Eder, Phot. Corr., 1902, **39**, 386; English, Phot. Mitth., 1901, **38**, 157; J. of Phot. Suppl., 1901, **48**, 43; Phot. C. Bl., 1901, **7**, 268; Bunti, Jour. f. Gasbel, **29**, 1022. For Stine amyl acetate lamp see Elec. World, 1899, **34**, 778. See also Onimus, C. R., 1898, **127**, 663.

4. A. J. Tempers (E.P. 10772, 1894) claims to be able to deprive petroleum hydrocarbons of their disagreeable odor by mixing a small amount (5-10%) of amyl acetate with the hydrocarbon, and Church has endeavored to increase the illuminating power of kerosene by the same method. See Reimann's Z., 1898, **29**, 425.

5. Judging from the author's examinations of crude imported fusel oil, and representing several hundred thousand gallons, at least 25% acetates, other than amyl, would be a fairly close approximation of the average amount of lower esters in commercial amyl acetate as offered for sale in the United States at the present time.

6. Weidmann and Schweizer, Pogg. Ann., 1838, **43**, 593.

7. Dumas and Peligot, Ann. Chim. Phys. (2), **58**, 46.

is the expense of removing sufficient water to admit of its profitable use as a pyroxylin solvent, and in preventing loss from evaporation due to the low boiling-point. In mixed formulas where the maximum of benzine has been added, methyl acetate is excellent to restore clearness and fluidity to a solution on the verge of precipitation. It is prone to become acid on standing, and like ethyl acetate can never be used alone. It is very hygroscopic, more so than acetone.

Methyl acetate is a fragrant, colorless liquid, which boils at 57.5°[1] has a sp.gr. of 0.9577 at 0°/4°,[2] and 0.88255 at 55°/4°.[3] It is soluble in 3 parts of water at 22°[4] and miscible with alcohol, ether, chloroform, amyl alcohol and acetate and acetone in all proportions. Both methyl and ethyl acetates absorb chlorine in the cold, forming substitution products which dissolve pyroxylin with avidity. The copals, dammar, sandarac, elemi and shellac are soluble, the latter with difficulty. The chloro- and bromo-methyl acetates have never been used commercially as solvents.[5]

Ethyl Acetate. The admission of ethyl alcohol suitably denatured duty free, has again revived the possibility of the extensive use of this liquid as a pyroxylin solvent. In speed of action this fluid is the superior of amyl acetate, but is decidedly hygroscopic, resembling wood alcohol in this respect. It is proposed to use preferably crude fusel oil as the denaturant, the addition of 5–10% effectively destroying its potability, and in addition furnishing the readily detected and obnoxious odor, thus safeguarding against its accidental use for internal purposes. The addition of the fusel oil, resulting in the production of small amounts of higher acetates along with ethyl acetate, would tend to improve the latter for all purposes where its solvent action was required, and would also tend to produce a compound in which the ethyl acetate could be removed only with difficulty—a valuable property.

The commercial manufacture of this ester is along the same lines as that of amyl acetate, variations being made for the increased solubility of the ethyl as compared with the corresponding amyl derivatives. The lower boiling point and greater volatility require greater refinements in neutralization, washing and rectification. Ethyl acetate is appreciably soluble in aqueous calcium chloride and magnesium chloride, therefore it is advisable in the process of dehydration to also

1. Schumann, Pogg. Ann., 1883, (2), **12**, 4.
2. Elsasser, A., 1835, **218**, 312.
3. R. Schiff, Ann., 1883, **220**, 107; 1884, **223**, 76.
4. J. Traube, Ber., 1884, **17**, 2304.
5. Pure methyl acetate may be formed by decomposing carefully crystallized methyl oxalate with glacial acetic acid, and fractionating under reduced pressure (Dittmar, J.C.S., 1869, **21**, 480).

recover dissolved acetates by a distillation of the calcium chloride liquor used to dehydrate the acetate, a process not found necessary in the manufacture of amyl acetate. Column stills similar to those described are used. The oil of vitriol must be incorporated with the alcohol is small portions, the heat generated in the formation of ethyl sulphuric acid being much greater than that given off in the formation of amyl sulphuric acid. Where acetate of lime is used, preliminary digestion with reflux condenser is usually unnecessary, the other steps in the process being conducted the same as in the manufacture of the amyl derivative. The main difficulty in the production of a sufficiently anhydrous solvent is in the separation of the water without seriously decreasing the yield. Whereas, theoretically, 88 parts amyl alcohol is transformed into 136 parts by weight of amyl acetate, a net gain of 148%, 46 parts of ethyl alcohol passes to 88 parts ethyl acetate, a net gain by weight of 191%. In practice, however, about 20% by weight is the usual increase in yield of ethyl over amyl acetates, substantially the same processes being used in each instance, with only those modifications indicated by the increased solubility of the ethyl acetate in water being added.

In the pure state (where sodium acetate and pure ethyl alcohol are used) this liquid finds extensive use in the artificial fruit-essence industries, where under the name of acetic ether it is used as an ingredient in a number of synthetic fruit flavors. The bouquet developed in cider vinegar and in tincture of ferric chloride (chloride of iron) is due in a large measure to the formation of ethyl acetate.[1] [2]

Ethyl acetate is a colorless, fragrant-smelling liquid, soluble in 17 parts water at 17.5°, while 28 parts of the acetate dissolve 1 part of water.[3] It boils at 77° [4] and has a sp.gr. of 0.9239 at 0°/4° [5] and 0.83 at 75.5°/4°.[6] It is freely miscible with alcohol, acetone, ether and amyl acetate. Absolute ethyl acetate is said to remain neutral indefinitely, but rapidly acquire an acid reaction when a small amount of water is present.[7] For this reason it is of no value alone as a pyroxylin

1. Ethyl acetate was discovered by Lauraguais, who published in 1759 a method of preparation consisting in heating strong acetic acid from verdigris with alcohol.

2. According to Frankland and Duppa, the best laboratory method of preparation consists in gradually adding 90 gm. sulphuric acid to 3.6 k. alcohol 95%, and after the formed sulphovinic acid has stood for 12 hours, the mass is gently poured on 6 k. powdered sodium acetate in a copper still. After the reaction has partially subsided heat is applied, and a distillate of about 6 k. anhydrous ethyl acetate eventually obtained.

3. Naccari and Pagliani, Jahrsb., 1882, 64.

4. Linneman, Ann., 1871, **160**, 208.

5. R. Schiff, Ann., 1883, **220**, 107.

6. Elsasser, Ann., 1883, **218**, 316.

7. The tendency to develop free acid increases from amyl acetate to methyl acetate.

solvent. A mixture of 70% ethyl and 30% amyl acetates, or 75% ethyl acetate and 25% amyl alcohol produces a solvent mixture which has a wide and satisfactory range of uses. The higher boiling amyl compounds decrease the hygroscopicity, inhibit the volatility, and prevent in a great measure the development of an acid reaction on standing. Acetone oil (heavy) 20, ethyl acetate 45, benzine 62° 35 parts, furnishes an inexpersive but efficient solvent combination. In the utilization of ethyl acetate for solvent purposes, a higher boiling point solvent or non-solvent must always accompany it, if best results are to be attained. The alcohols and acetates of methyl, ethyl, propyl, butyl and amyl, are all colorless, neutral, characteristic smelling fluids, readily burning with a flame which is colorless with the lower members and increases in luminosity with increase of carbon atoms. Laboratory experiments appear to indicate that a large field for the use of ethyl acetate as a solvent lies in the replacement of the ether in the usual collodion formulas with ethyl alcohol, when it becomes valuable for the production of photographic and continuous films and as a medium for the topical application of therapeutic agents.

Propyl and Butyl Acetates are comparatively of but minor importance, and are never used in their isolated state as cellulose nitrate solvents. Greatest interest attaches itself to the *iso*acetates, on account of their normal occurrence in commercial amyl acetate. *Iso*propyl acetate is an ethereal-smelling, colorless fluid of sp.gr. 0.9166 at 0°,[1] and boils at 90–93°.[2] *Iso*butyl acetate resembles the *iso*amyl ester, boiling at 116.3,[3] sp.gr. 0.8921 at 0°/4°.[4] It may be formed from *iso*butyl iodide and silver acetate or by distilling potassium *iso*butyl sulphate with potassium acetate, both being general methods for the formation of these esters. In their solvent action of the cellulose nitrates and resins, they closely resemble mixtures of ethyl and amyl acetates. Methyl and ethyl propionates[5]

1. Pribram, J. Handl. Monats., 1881, **2**, 686.
2. Friedel, Ann., 1862, **124**, 327.
3. At 760 mm., Schumann, Pogg. Ann., 1846, (2), **12**, 41.
4. Elsasser, Ann., 1872, **161**, 325. 0.7589 at 112.7°/4° according to R. Schiff (Ann., 1883, **220**, 109).
5. The possible competition of propionic with acetic esters is not entirely visionary. A. Dubosc (Rev. gén. chim., 1909, **12**, 273) has described Effront's recently introduced process for the industrial production of propionic acid and ammonia by the action of amidase upon the diamino acids in distillery residues. The process is of prospective technical and economic importance since the raw material, a hitherto wasted product of the alcohol industry, is available in inexhaustible amount; the reaction, being enzymatic, requires no expensive and complicated plant nor dangerous manipulation, the by-product ammonia is in limitless demand and the acid itself can be obtained of suitable concentration for use in most industries without consumption of fuel. Amidase occurs in all yeasts, in various bacteria and molds and in garden soil: in the usual function of yeast it is inactive and only

and butyrates; propyl propionate and butyl formate or acetate, if procurable at prices which would enable satisfactory competition with amyl acetate, would undoubtedly prove valuable solvents for pyroxylin, vegetable oils and resins.

Amyl Formate. The *iso*amyl ester is a pleasant-smelling ethereal liquid, less soluble in water than the corresponding acetate, sp.gr., 0.894 at 0°/4°,[1] and boils at 123.5–124.0°.[2] According to Traube[3] it is soluble in 325 parts of water at 22°. *Iso*amyl formate has been repeatedly advocated as a solvent for the cellulose nitrates, and if it could be produced at a cost which would enable it to favorably compete with the acetate, it would undoubtedly be used in immense quantities. It appears to possess all the desirable qualities of the acetate added to which is a decreased solubility in water and a lower boiling-point and hence more rapid evaporation. The patented process of A. Behal[4] for the manufacture of this solvent has never been placed on a manufacturing basis. *Iso*amyl formate differs from the acetate in being an excellent solvent for a large number of resins, among which are copal and shellac, neither of which are freely soluble in

reacts under what may be regarded as pathologic conditions. The charge of yeast (5–10% of the vinasse to be treated) is prepared by alkalifying, aerating and agglutinating with aluminum salts and letting stand 3 days. The vinasses emerging from the still at about 45° are alkalified, mixed with 2 k. of prepared yeast per hectoliter, and allowed to stand 3 days at 45°, when the diamino acids are broken up. During the first 2 days an active fermentation occurs without production of ammonia; then the vinasse settles, and the ammoniacal change rapidly augments. Nitrates and phosphates aid the fermentation, but hinder the production of ammonia. Antiseptics such as xylene and thymol are beneficial by hindering the reproduction of cells. Aluminum salts assist by permitting agglutination of the ferments, which determines a change of function of the cells. The action of the yeast is in a sense self-consuming, for in addition to liberating all the nitrogen of the amino acids as ammonia a considerable proportion of the nitrogen of the yeast is thus accounted for. The ammonia is recovered by distillation, or more cheaply by washing out with air and absorbing in sulphuric acid. The remaining fatty acid is salted out with calcium chloride, ammonium sulphate, or by filtration through sea salt. A concentration of 75% may be obtained by the last method. By fractionally distilling this product an octahydrate containing 30% propionic acid comes over at about 99.5°, followed by the anhydrous acid at 141°. By salting out 75% acid with calcium chloride a 95–97% acid may be obtained. As regards the efficiency of the Effront process it produces at the Nesle distillery (1) from the molasses vinasse resulting from the production of 100 l. alcohol, 35 k. ammonium sulphate and 35 k. of fatty acid; (2) from beet root vinasse representing 100 l. alcohol, 16 k. ammonium sulphate and 12–14 k. of fatty acid. The diamino nitrogen is totally converted into ammonia without formation of amines or compound ammonias.

1. Schumann, Pogg. Ann., (2), **12**, 4. As far back as 1865 (F.P. 68595) Lorin patented a method of obtaining formic acid from amyl formate.

2. R. Schiff, Ann., 1883, **220**, 106.

3. Ber., 1884, **17**, 2304. 0.3 gm. *iso*amyl formate dissolves in 100 cc. water at 22°. For solubility of mixtures of amyl acetate and amyl formate in aqueous alcohol, see Bancroft, Phys. Rev., 1895–1896, **3**, 131, 196, 205.

4. E.P. 12157, 1899. Small quantities may be prepared in the laboratory by heating together calcium formate and amyl alcohol in the presence of sulphuric acid, or by heating together glycerol, oxalic acid and amyl alcohol.

amyl acetate. In the process of P. Krais [1] for finishing textiles the goods are passed between finely engraved rollers, then coated with a solution of nitrocellulose in amyl formate, the latter being evaporated to fix the finish, without forming an opaque, disagreeable skin or unpleasant odor.

Examination of Commercial Amyl Acetate. The following tests usually comprise a sufficiently complete analysis of the commercial ester to determine its industrial value.

Moisture. Place 10 cc. acetate in a 50 cc. graduated cylinder. Carefully pour in benzine in small quantities at a time, shaking after each addition, until a permanent opalescence results. If the total liquid in the cylinder exceeds 20 cc. the acetate is sufficiently free from water for all technical uses.

Color. Should be colorless and not tinged with yellow.

Odor. Should not smell of sulphur dioxide.

Acidity. 50 cc. acetate is shaken with 150 cc. neutral distilled water in a 250 cc. glass-stoppered separatory funnel, and after the two layers have separated, an aliquot portion of the lower or aqueous layer withdrawn and titrated with tenth-normal alkali, azolitmin or phenolphthalein being used as indicator. If 25 cc. be withdrawn for titration, each cc. N/10 alkali used is equivalent to 0.024% acetic acid by volume. If the acetate is intended for use in a lacquer, 5 gm. pyroxylin is dissolved in 100 cc. acetate and the solution run out on a brass boat as explained under testing of lacquers. A resplendent film resulting and without affecting the brass is proof positive of suitability of acetate for lacquers, waterproofing compositions or plastics.

Lower Acetates. 200 cc. (or other convenient quantity) is slowly fractionated in a 3-bulb Ladenburg distilling flask, the distillation requiring at least an hour's time. Not less than 75% should distill at a temperature of 125° or above.

Determination of Acetates. 5 gm. is dissolved in 20 cc. neutral ethyl alcohol, an excess of standard alcoholic potash solution added, and the whole transferred to a pressure saponification flask and placed in water heated to 80–90° for 30 minutes, with occasional rotation of the contents in the flask. The flask is then taken out of the hot water, cooled to room temperature, then opened, a drop of phenolphthalein added, which should immediately assume a pink color, and the contents of the flask washed into a graduate with neutral alcohol, and made up to 100 cc.; 20 cc. is withdrawn with a pipette, placed

1. E.P. 18742, 1904; U.S.P. 834913, 1906; abst. J.S.C.I., 1905, **24**, 887; 1909, **28**, 653; Text. Rec., 1907, **32**, 106; Text. u. Färb. Z., 1906, **4**, 165.

in a small Erlenmeyr flask, and titrated with standard acid to neutrality, the difference between the amount of alkali originally used, and that neutralized by the standard acid being the alkali combining with the acetic acid. Each gm. potassium hydroxide so used represents 1.071 gm. acetic acid, equivalent to 2.32 gm. amyl acetate. To determine the relative amount of lower and higher esters in the acetate, 160 cc. may be slowly distilled into three fractions of 50 cc. each, the first and last fractions being analyzed for acetic acid as above, both being calculated into amyl acetate. The higher the result in the first fraction as compared with the last, the larger amount of lower acetates present.

CHAPTER VII

NATURAL, ARTIFICIAL, AND SYNTHETIC CAMPHOR. CAMPHOR SUBSTITUTES

JUST as amyl acetate is the most important and widely used of the liquid solvents of the cellulose nitrates, so also is camphor the most valuable of the solid or latent solvents. And as the rise and expansion of the artificial leather, lacquer and other industries dependent upon fluid pyroxylin dates back to the discovery of the value of amyl acetate, so the solid or pyroxylin plastic arts received their first permanent stimulus from the discovery of the latent solvent action of camphor. It is interesting to note that the entire range of industrial applications of the various cellulose nitrates have not been developed from advances made in manufacture of the cellulose nitrates primarily, but mainly due to the discovery and utilization of suitable solvents.

Camphor[1] is the dextrorotatory modification of the saturated ketone $C_9H_{16}CO$, obtained from the camphor laurel, from the wood of which it is extracted by steam distillation followed by sublimation.[2]

1. Camphor is a generic name applied to certain oxygenated bodies found in many essential oils. These "camphoroids," with but few exceptions (e.g., the paraffin of rose oil), form the so-called stearoptens of volatile oils. They are volatile, crystallizable solids, practically insoluble in water or aqueous alkalis. While possessing similar physical properties, these camphoroids are of somewhat varied chemical composition. Some have the constitution of alcohols (borneol), others that of phenolic ethers (apiol, the camphoroid of parsley oil), while others as common camphor, are ketones. It appears desirable to restrict the use of the word "camphor" to laurel camphor and its immediate analogues of ketonic construction. Nearly all essential oils containing camphoroids have been noted as solvents of the cellulose nitrates, and conversely, the faculty with which these oils dissolve pyroxylin is in direct proportion to the amount of camphoroids which they contain.

2. According to G. Drobegg (J.S.C.I., 1907, **26**, 381), the principal methods of purification applied in practice are:

Resublimation. In Europe this is done principally in glass retorts, yielding a round, concave cake weighing 6–8 lb., having an opening in the center. In America the camphor is sublimed from flat iron pans with iron covers, yielding plates of about 18 in. square, and 1 in. thick, weighing from 8–10 lb.

Condensation. Camphor vapors are led into large stone or metal chambers, where they are cooled and condensed to a microcrystalline powder, which is afterwards pressed (hydraulically) into cubes or plates.

Crystallization. The crude material is dissolved in boiling benzene or petroleum ether, allowed to settle, filtered, and, after crystallization, dried in centrifugal machines.

Crude camphor appears in commerce as a coarse wet powder of a grayish-white

When purified,[1] camphor is white, translucent, and crystalline, soluble at room temperature in about 700 parts of water, dissolves at 15° in 0.7 part absolute ethyl alcohol, and is readily soluble in methyl alcohol, acetone, chloroform, amyl acetate, benzene and benzine. It melts at 175° and boils at 204°, and in closed vessels sublimes unchanged. It is inflammable, burning with a smoky, luminous flame, but its presence decreases the inflammability of the cellulose nitrates. Camphor may be readily powdered by trituration with an equal weight of sugar, or better with one-half its volume of alcohol, ether, chloroform or glycerol. Its sp.gr. varies from 0.985–0.998, depending upon the force and completeness with which the camphor oil has been pressed out [2] of the crude product and the speed of distillation and sublimation.

color. Chinese camphor is packed in round wooden pots of about 150 lb. net content; Japanese in lead-lined wooden boxes containing about 130 lb. net.

The rare kinds of camphor—borneol, Chinese camphor, Sumatra camphor—do not come in consideration from the point of view of the refiner.

The principal impurities in crude camphor are water, camphor oil, iron, sand, wood, etc. The camphor oil is separated from the crystalline product in Japan, and in the past has been of little value. At present it is much higher in price, owing to its valuable ingredients. Light oil of camphor has a sp.gr. of 0.895 to 0.920; b. pt., 170–180°, and contains pinene, camphene, dipentene, phellandrene, etc. Heavy oil of camphor, having a sp.gr. of 0.960–0.970 and b. pt. 240–300°, contains sesquiterpene, safrol, eugenol, cineone, fenchone, terpinone, etc. Besides these compounds, both of the oils contain a large amount of camphor in solution, which years ago was a profitable commercial raw material after being frozen out.

To the refiner the two most objectionable impurities in crude camphor are oil and water, which must be removed before refining, as the oil gives the refined camphor a fatty touch, and the water renders it opaque. The elimination of water and oil is often effected by washing in a centrifugal machine with small quantities of water; the liquor draining off contains both oil and water. The separation is also done by hydraulic pressure; or for freeing it from water only, by placing the camphor in an airtight chamber in layers 3–4 in. thick and 12 in. apart. Between those layers are inclined metal gutters charged with pieces of calcium chloride, which are subsequently regenerated. Another method of separation of oil and water from the camphor is to crystallize it from boiling benzene or petroleum ether solution, this prepared material being the most desirable for refining. The process of refining consists in mixing the prepared material with a little lime, charcoal, or iron filings, according to quality, and charging each pan with about 12 lb. of material; the subliming pans are heated slowly for two hours, and then fired rapidly up to 190°, this temperature being kept for from 12–16 hours. After cooling, the refined product is removed from the cover by slightly heating the cover, and then cut into the desired shape.

For description of Japanese camphor monopoly and the manufacture of "monol," see Chem. Trade Jour., 1909, **44**, 385; abst. Chem. Abst., 1909, **3**, 2345.

1. For symposium of articles on camphor, see J.S.C.I., 1907, **26**, 380–6.

2. *Sumatra Camphor, Borneo Camphor, Dryobalanops Camphor, Borneol.* This camphor is produced in the islands of Sumatra and Borneo, by *Dryobalanops aromatica*. This tree is very large, often exceeding 100 ft. in height, with a trunk 6 or 7 ft. in diameter, and ranks among the tallest and largest trees in India. (Am. J. Pharm., **21**, 329.) It is found in Sumatra and Borneo, and is abundant on the northwest coast of the former island. The camphor occurs in concrete masses, which occupy longitudinal cavities or fissuers in the heart of the tree, from a foot to a foot and a half long, at irregular distances apart. The younger trees are generally less productive than the old. The only method of ascertaining whether a tree contains camphor is by incision. A party proceeds through the forest wounding the trees, till they find one which will answer their purpose; and hundreds

The mechanics of the solvent action of camphor on the cellulose nitrates have never been fully worked out. It is a non-solvent in the cold, but very active above its boiling point. Heat and great pressure are absolutely necessary, if no fluid is present. The addition of small amounts of methyl, ethyl or amyl alcohols to a finely comminuted mixture of pyroxylin and camphor will cause a rapid solution of the former, even at ordinary temperature, but the solvent action is greatly accelerated by raising the temperature to 80–100°. The details of the application of camphor in the formation of plastics are given in Chapter XIV.

Artificial Camphor is the name applied to *d*-pinene hydrochloride, and less often to the hydrobromide, which is obtained by passing dry hydrochloric acid gas into dry American or French oil of turpentine. A white, snow-like solid separates, which is washed free from acid by cold water and further purified by recrystallization from benzene or ligroin. This hydrochloride of the terpene, pinene, has the mass formula $C_{10}H_{16}.HCl$, possesses a pungent, camphor-like odor, and has much the same solubility as camphor in alcohol and fusel oil. Otherwise it is a totally different product, containing chlorine, of which natural or synthetic camphor is free. It is of no value as a camphor substitute in the preparation of pyroxylin plastics—although an efficient gelatinizer of the cellulose nitrates—due to the fact that it slowly but continually gives off chlorine, which at first discolors and eventually decomposes the plastic. It has no extensive technical use, other than as an intermediate step in the preparation of camphor.

Synthetic Camphor.[1] The rapidly increasing consumption of camphor in the arts without a corresponding increase in the production,

may be examined before this object is attained. When discovered, the tree is felled and cut into logs, which are then split, and the camphor removed by means of sharp-pointed instrumetns. It is stated that the masses are sometimes as thick as a man's arm, and that the product of a medium-sized tree is nearly 11 lb.; of a large one, double that quantity. The trees which have been wounded and left standing, often produce camphor for seven or eight years afterwards.

Borneo camphor resembles in appearance ordinary camphor, but has, according to Christison, a specific gravity of 1.009, and sinks in water. Its odor is also distinctly different from that of camphor. It usually pulverizes without the addition of alcohol, is less volatile than ordinary camphor, and does not crystallize in the interior of the bottles in which it is kept. It fuses at 206° and boils at 212°; is dextrogyrate; has a formula of $C_{10}H_{17}(OH)$; and by the action of boiling nitric acid is converted into common camphor. It does not reach European commerce, being largely consumed in the Batta provinces, especially in funeral rites, and any that is exported is bought up at enormous prices for China, where it is preferred for embalming purposes on account of its being less volatile than the ordinary drug. See Chem. Zeit., 1910, **34**, 320.

1. The material used in the compilation of this topic was taken partially from "Syntheses of Camphor," F. J. Pond, J.S.C.I., 1907, **26**, 383; L. Kebler, Am. J. Pharm., 1907, **79**, 349; A. Colin, Rev. gen. chim., 1908, **12**, 146, 192; W. Darrah, Chem. Eng., 1909, **9**, 165; C.N., 1909, **100**, 45. See also E. Darmois, C.R., 1910, **150**, 925.

especially in the celluloid industry, where according to Schüpphaus,[1] two-thirds of the total amount is consumed, has made the synthetic preparation of camphor a matter of considerable theoretical as well as commercial interest. Owing to the steadily increasing cost of Japanese and Formosa camphor, although the production is now directly under the supervision of the Japanese government, efforts have recently been more persistent in attempts to synthesize this ketone.

By "synthetic" camphor[2] is to be understood the substance consisting essentially of the compound, $C_{10}H_{16}O$, which in chemical composition is identical with natural camphor,[3] except that the latter is dextrorotatory, while the former is unaffected by polarized light.[4] The synthetic production of camphor rests upon a knowledge of the molecular structure of natural camphor, and this has been supplied by many researches, notably by those of Bredt and v. Rosenberg,[5] whose formula has been conclusively corroborated by the synthesis of camphoric acid by G. Komppa,[6] the formulas for the various compounds being:

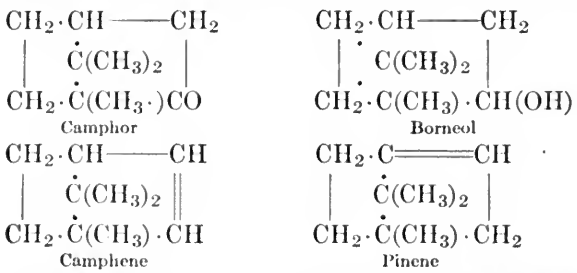

1. J.S.C.I., 1907, **26**, 383. 2. Cf. J. Spruijt, Pharm. Weekblad, 1908, 1001.

3. While synthetic camphor is artificial, the reverse is not the case.

4. Cf. O. Aschen, Ber., 1908, **41**, 1092; for tests of purity of synthetic camphor see A. Basselli, Giorn. farm. Triesto, 1907, 2, through Repert. pharm., 1909 (3), **19**, 125; for distinctive tests for artificial, synthetic, and natural camphor, see P. Borisch, Pharm. Centrahl., 1907, **48**, 527; Anon., G. Z., Celluloid Suppl., 1908, **22**, (Aug.) 21, 95; E. Darmois (C.R. 1910, **150**, 925) has succeeded, by working at a relatively low temperature, in preparing synthetic camphor having an optical activity only slightly less than that of natural camphor. Oil of turpentine is freed from the portion distilling above 165°, and is then converted into pinene hydrobromide. The latter is converted into borneol by means of its magnesium derivative; in this operation some dibornyl, $(C_{10}H_{17})_2$, is also formed, but being much less volatile than borneol, the latter may be separated by distillation with steam. The borneol is purified by recrystallisation from petroleum spirit, but is not a homogenous substance, the rotatory powers of the crystals removed from the mother liquor after different intervals of time differing considerably. Starting with turpentine from the Aleppo pine (J.S.C.I., 1909, **28**, 1050) the borneol obtained is mainly a mixture of *d*-borneol and *l-iso*borneol, which on oxidation yields a camphor having the rotary power $[a]_D = +49°$ ($[a]_D$ of natural camphor $= +57°$). From French oil of turpentine, in a similar manner, a camphor having the rotary power $[a]_D = -45°$ is produced. It is possible that by working at a lower temperature, a product entirely identical with natural camphor could be obtained. For history of the researches which led to the determination of the constitution of camphor, see G. Blanc, Bull. Soc. Chim. May 5, 1909; abst. Am. Chem. J. 1910, **43**, 254; also Aschan, Ann. 1901, **316**, 196. 5. Ber., 1893, **26**, 3047.

6. Ber., 1908, **41**, 1039; Ann., 1909, **368**, 126; 1909, **370**, 209; Komppa and A. Bergroth, Ber., 1896, **29**, 1625.

It has long been known that camphor may be obtained by the oxidation of natural borneol with various oxidizing agents, but while this fact, in itself, is of but little importance, yet the oxidation of synthetic borneols constitutes the final step in the commercial preparation of synthetic camphor by the majority of the methods.

Of but little commercial significance, although of much theoretical interest, is the partial synthesis of camphor, first accomplished by Bredt and v. Rosenberg [1] by the dry distillation of calcium homocamphorate, which splits up into calcium carbonate and camphor.

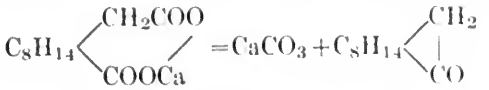

Calcium salt of homocamphoric acid — Camphor

The preparation of normal camphoric acid alkyl esters,[2] while of theoretical value, is too expensive for use in this connection. Bertram and Walbaum [3] found in 1892 that when camphene is heated with glacial acetic acid and 2% sulphuric acid for 4–6 hours at 50–60°, *iso*borneol acetate is produced in satisfactory amounts, an important commercial method for camphor production was opened. The oily *iso*borneol acetate, when washed with water to remove acid, is then converted into *iso*borneol by saponification with alcoholic potash, and this in turn, can be readily transformed into ordinary camphor by oxidation with various agents. This synthesis may be represented in steps as follows: [4]

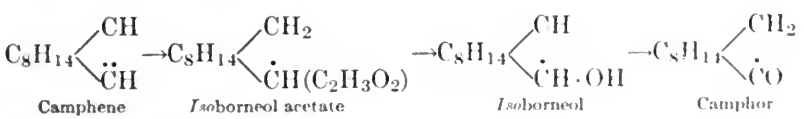

Camphene — *Iso*borneol acetate — *Iso*borneol — Camphor

These investigators fully established the identity of their product with Japanese camphor by the fact that it gave a mixture of borneol and *iso*borneol by reduction with sodium alcoholate.

Many processes have been proposed in refinement or elaboration of this fundamental synthesis. The first problem was the discovery of a satisfactory method for obtaining the required amounts of camphene

1. Ann., 1896, **289**, 1; see Beckmann and Saron, Ber., 1909, **42**, 485; Haller, Bull. Soc. Chim., 1886, **15**, 324.

2. Process of J. Riedel, D.R.P. 196152, 1907; Addition to D.R.P. 189840, 1906; in which normal esters of inactive camphoric acid are obtained by the action of dimethyl sulphate on an aryl sulphonic ester or a salt of inactive camphoric acid at the ordinary temperature.

3. J.pr.C., N.F., **49**, 1; D.R.P. 67255, 1892.

4. O. DuBosc, E.P. 8260–A, 1906, duplicated as 8356–A, 1906. As a natural product camphene has been found, although in relatively small quantities, in about eighteen essential oils.

commercially. Up to this time camphene had been a chemical curiosity, and prepared in the laboratory only, and with difficulty. Previously, camphene had been artificially prepared in small quantities, and with little regard as to cost of production, by the action of concentrated sulphuric acid upon pinene, the latter being obtained from oil of turpentine.[1] It was soon found, however, that if pinene hydrochloride be first prepared, the halogen could be readily removed, when camphene results. Various methods were proposed for economically splitting the pinene hydrochloride into camphene, among which may be mentioned the following, which have assumed more or less industrial importance. Heating of the pinene hydrochloride with glacial acetic acid,[2] sodium or lead acetate,[3] glacial phosphoric acid,[4] or meta- or pyro-borates or -silicates in aqueous solution for a long time to 150–200°;[5] heating with aniline,[6] toluidine,[7] sodium phenolate,[8] or naphtholate,[9] calcium phenolate,[10] or naphtholate,[11] caustic potash and calcined magnesia,[12] sodium alcoholate;[13] distillation over lime;[14] heating with water under considerable pressure,[15] and heating with sodium stearate, benzoate or cinnamate.[16] The majority of these agents were found either to act incompletely, or so energetically that subsidiary products formed which reduced the yield of camphene and increased the cost from the time required to eliminate the by-products.

It became evident, therefore, that for the synthesis of Bertram and Walbaum to attain commercial value, a more satisfactory method of conversion of pinene hydrochloride into camphene must be worked out. Since 1900 the following methods have been published, in which it is claimed that many of the objections of the older processes have been satisfactorily overcome. In eliminating the halogen acid from pinene hydrochloride, heating with aliphatic bases,[17] as methylamine, dimethylamine, ethylamine, or piperazine, piperine, or piperidine; by heating with ammonia, either gaseous, aqueous or alcoholic;[18] heating

1. Armstrong and Tilden, Ber., 1879, **12**, 1753.
2. O. Wallach, Ann., 1887, **239**, 6.
3. A. Behal, P. Magnier and C. Tisser, F.P. 349896, May 5, 1904, and First Addition, May 16, 1904; J.S.C.I., 1905, **24**, 857.
4. G. Wend, D.R.P. 207888, 1908.
5. A. Roesler, D.R.P. 205295, 1908.
6. Brühl, Ber., 1892, **25**, 146.
7. Berlin Aniline Co., D.R.P. 205850, 1907.
8. E. Bergs, U.S.P. 833666, 1906.
9. Badische Aniline Co., E.P. 16429, 1906.
10. F. Koch, D.R.P. 206619, 1907.
11. J. Goldsmith, E.P. 21171, 21180, 1906.
12. Kachler, Ann., 1879, **197**, 96.
13. O. Wallach, Ann., 1885, **230**, 238.
14. Berthelot, Ann., Chem. Phys. 1878, 56.
15. Kachler, l.c.; for method of preparing borneol-, *iso*borneol- and terpineol-propionates and butyrates, see Soc. Le Camphre, F.P. 408065, 1909.
16. Berthelot and Riban. Camphene had also been prepared by the action of dehydrating agents upon borneol and *iso*borneol; O. Wallach, Ann., 1885, **230**, 239; Konowaloff, Jour. Russ. Phys. Chem. Soc., 1900, **32**, 78; Bertram and Walbaum, l.c., page 8.
17. Stephan, U.S.P. 707270, 1902.
18. Stephan, 707271, 1902.

aqueous alkali in the presence of a soap,[1] the latter being a solvent of the pinene hydrochloride; heating with anhydrous phenolates,[2] or an aqueous alkaline solution of the higher fatty acids;[3] heating with an alkaline earth salt of a naphthol;[4] or barium naphtholate;[5] the alkaline earth metal, (calcium or magnesium being generally employed) was intended to remove traces of chlorine from the prepared camphene, small amounts of chlorine being inadmissible for camphene used as a camphor in celluloid on account of the splitting off of hydrochloric acid and the discoloration if not ultimate decomposition of the celluloid. The oxidizing action of barium peroxide [6] or sodium peroxide,[7] heating with alkaline benzene [8] or naphthalene sulphonates [9] to 150–160°; heating directly with potassium carbonate,[10] α- or β-naphthylamine,[11] alkaline earth salts of organic sulphamides (benzene sulphamide, napthyl sulphamide),[12] or sodium *p*-toluene sulphonate [13] have been advocated. To reduce the amount of bornyl- and *iso*bornyl-acetate always produced in conjunction with the camphene, heating with basic lead acetate is recommended.[14] The method of production by distilling bornyl chloride at 180–210°, the distillate being refluxed to allow HCl to escape and camphene to be retained, has as yet proven too expensive.[15] Other methods [16] offer but little new in the matter of suggestion.[17] By means

1. Stephan, 725890, 1903; Stephan and Hunsalz, U.S.P. 770940, 1904; 790601, 801483, 1905; Stephan and Rehländer, U.S.P. 801485, 1905.
2. Badische Aniline Co., D.R.P. Anm. B., 40529, Aug. 20, 1905; E.P. 16429, 1906.
3. E. Schering, D.R.P. 153924, 1901; Basle Chem. Works, E.P. 19960, 1906; D.R.P. 185402, 1906.
4. Badische Aniline Co., E.P. 5674, 1908; Addition to E.P. 16429, 1906; J.S.C.I., 1906, **25**, 909.
5. F. Koch, E.P. 22810, 1906; F.P. 377311, 1907.
6. O. DuBosc, E.P. 8260, 1906, duplicating E.P. 8356, 1906; U.S.P. 937928, 1910.
7. Schmitz & Co., E.P. 25453, 1907. 8. Chem. Fab. Sandoz. F.P. 386928, 1907.
9. Chem. Fab. Sandoz, E.P. 10783, 1907.
10. Schmitz & Co., F.P. 384955, 1907.
11. Berlin Aniline Co., D.R.P. 206386, 1907.
12. E. Schering, D.R.P. 197316, 197805, 1907. See also Schering, D.R.P. 158717, 161523, 197346; Aust. P. 23240, 23242, 1905. A camphene entirely free from chlorine is claimed to result from this process, and the synthetic camphor, therefore, to be entirely applicable for use in pyroxylin plastics.
13. Chem. Fab. Sandoz, D.R.P. 204921, 1907.
14. J. Basler & Co., U.S.P. 876310, 1908; E.P. 19961, 1906; D.R.P. 212901, 1904; Aust. P. 30845; it is stated that at 140°, only a little bornyl and *iso*bornyl acetates are formed in addition to camphene, and that if the heating be conducted in an autoclave for several hours and the temperature be allowed to rise to 180°, the formation of bornyl acetate increases in amount, and finally constitutes the principal product.
15. C. Glaser, U.S.P. 923967, 1908; cf. A. Wack, U.S.P. 898942, 898943, 1908; F.P. 385700, 1907.
16. R. Ellis, E.P. 10784, 1907; F.P. 375897, 1907; abst. J.S.C.I., 1907, **26**, 947; A. Bischler and A. Basselli, U.S.P. 876137, 876310, 1908; E.P. 19960, 1906; D.R.P. 193301; abst. J.S.C.I., 1907, **26**, 22; Chem. Fab. Sandoz. E.P. 10783, 1907; F.P. 386928, 1907; O. Billeter, U.S.P. 891033, 1908; F.P. 376897, 1907.
17. C. Weizmann, U.S.P. 896962, 1908; E.P. 5032, 1906; 16605, 1907; F.P. 386552, 1908; D.R.P. 197163, 1908.

of the above-outlined methods a supply of camphene is obtained at a satisfactory cost, depending on the production of pinene. It is therefore evident that the source and production of pinene chloride at a proper initial cost is an important preliminary to the successful manufacture of large quantities of camphene.

In the commercial preparation of pinene hydrochloride, French or American turpentine is first partially purified by boiling the same with metallic sodium [1] or calcium [2] and distilling, or a preliminary treatment with concentrated sulphuric acid is made, which resinifies the impurities.[3] The pinene hydrochloride is proportionately very stable in concentrated inorganic acids, while the majority of the oily products pass into solution. The pinene hydrochloride may be further purified by partially saponifying the by-products by heating the mass to 80–100°, until comparison with a standard purified ester, shows that the material being purified does not split off HCl more easily than the standard.[4] After purification of the original turpentine dry HCl gas is passed through it to saturation, when solid pinene hydrochloride separates, which, when recrystallized, is a snow-white product.[5] About 70% pinene can be obtained from turpentine oil.

The adequate supply of pinene hydrochloride and camphene being assured, the latter is converted into *iso*borneol, and this in turn, transformed into camphor, as described. The steps from pinene through the hydrochloride to camphene are as follows:

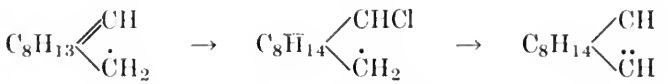

Pinene — Pinene hydrochloride — Camphene

One of these syntheses, carried out in detail commercially, would be to prepare camphene as outlined above, and from this *iso*bornyl acetate, which is an oily liquid, boiling at about 225°. This is then saponified with an alkaline hydroxide, usually 5% aqueous or alcoholic sodium hydroxide, when the *iso*borneol separates as a solid mass. It is purified by solution in hot benzene, filtration, and precipitation on the cooling of the solvent. The mass is centrifuged, benzene solvent removed by drying, and the *iso*borneol then oxidized to camphor—the final step. Much ingenuity and patience have been displayed in the selection of the oxidizing agent and the control of the oxidizing process, that the maximum yield may be obtained and no carbon-

1. C. Weizmann, E.P. 23875, 1906.
2. Clayton Aniline Co., E.P. 21946, 1907; F.P. 389071, 1908.
3. Chem. Fab. Lienau & Co., D.R.P. 182044, 1902; Addition to 175662, 1902.
4. Chem. Fab. Lienau & Co., D.R.P. 175662, 1902.
5. A. DuBosc and C. Piquet, F.P. 349852, 1904.

ization take place to darken the final product. Nitric acid is most often used,[1] being heated with the *iso*borneol at 37–40° either with[2] or without a catalyzer;[3] vanadic acid and ammonium vanadate may be employed, or nitrous acid introduced directly, either by an acid containing the lower nitrogen oxides,[4] nitrous acid,[5] or the addition of small amounts of sodium nitrite.[6] Another method proposed consists in leading a chloroformic solution of *iso*borneol through nitrous acid gas, the fluid being saturated until it turns bluish-green on cooling, while the slightly colored oil which subsides is changed into camphor upon the addition of water.[7] Where chromic acid is used as the oxidizing agent,[8] the *iso*borneol is first dissolved in a non-oxidizing immiscible solvent.[9] Where some form of chlorine is the oxidizer an aqueous solution of the gas is usually preferred,[10] care being taken that the chlorine is not in excess, the *iso*borneol being either finely pulverized or previously dissolved in benzene,[11] the chlorine being in the nascent state or nearly so.[12] A final oxidation with small amounts of manganese dioxide[13] or a catalyzing agent as iron or

1. Basle Chem. Co., E.P. 8757, 1907. See Chem. Fab. v. Sandoz (D.R.P. 218989, 1907) for preparation of camphene and camphene hydrate from pinene hydrochloride by means of alkali or alkaline earth oxides.

2. G. Ellis, E.P. 10407, 1906.

3. G. Austerweil, E.P. 18047, 1908; F.P. 392011, 1908; D.R.P. 211799, 1908. In D.R.P. 217555, 1908, Austerweil obtains camphor from borneol and *iso*borneol by oxidation with air or oxygen in the presence of nitric and vanadic acids. A. Wack and Verona Chem. Co. (U.S.P. 898943, 1908) oxidize *iso*borneol to camphor by sulphanilic acid.

4. C. Philipp, U.S.P. 849018, 1907.

5. Basle Chem. Co., F.P. 377926, 1907.

6. Chem. Fab. v. Heyden, F.P. 365974, 1906.

7. C. F. Boehringer & Son, D.R.P. 177290, 177291; Aust. P. 28949, 28950; 33453, 1908; D.R.P. 179738, 182300, 1904.

8. A. Verley, E. Urbain and A. Feige, U.S.P. 907428, 908171, 1908; E.P. 14549, 14550, 1907; F.P. 383557, 383558, 1907; D.R.P. 207156, 1907; Schmitz & Co., F.P. 383419, 385341, 1907; A. Boult, E.P. 5513, 1908.

9. A. Friedl and C. Weizmann, E.P. 21946, 1907; the method consisting in mixing together 260 parts by weight of 33% sulphuric acid, 100 each *iso*borneol and acetone, 65 parts potassium bichromate being gradually added with agitation and the mixture heated for 2 hours under a reflux condenser. It is stated that the presence of acetone maintains the *iso*borneol and camphor in solution, and prevents them from subliming; it also prevents contamination of the camphor by the salts of chromic acid, and the temperature of the reaction from rising above the boiling point of acetone (56°).

10. C. F. Boehringer & Son, D.R.P. 177290, 177291, 1904; First Addition, 179738, 1905; for process for preparing bornylene from dextropinene, see I. Kondalow, First Addition, dated Aug. 10, 1909, to F.P. 397161, 1908; E.P. 7322, 1909. For oxidation of borneol by calcium hypochlorite, cupric chloride and ferric chloride see J. Hertkorn, U.S.P. 901708, 1908; D.R.P., H-38309, 1902. Also same, U.S.P. 901293, 1908; D.R.P., H-37298.

11. J. Hertkorn, E.P. 20050, 1908.

12. J. Kertkorn, F.P. 352888, 1905; the *iso*borneol 15.4 k. being dissolved in benzene 10 k. at the ordinary temperature. This solution is shaken with a solution of chlorine 7.1 k. in water 900 l. and allowed to settle, when the benzene solution of camphor separates and the camphor is recovered by extraction.

13. Basle Chem. Co., F.P. 362956, 1906; the formula being *iso*borneol 100,

cobalt[1] has been recommended. In order to modify the action, the introduction of cooled air or carbon dioxide may be necessary, if the reaction proceeds too energetically.[2] The tendency toward the production of condensation products is said to be reduced by the addition of small amounts of sulphanilic acid during the oxidation process.[3]

Electrolytic oxidation, in presence of catalytic oxidizing agents, 5% sodium hydroxide[4] solution being the electrolyte, has been proposed; or the *iso*borneol may be suspended in a solution of an alkaline chloride,[5] magnesium carbide, ferromanganese[6] ferrochrome, or superoxides[7] have also been advocated. Sodium peroxide,[8] cupric oxide,[9] heating with finely divided copper,[10] or copper gauze,[11] and ozone,[12] all having been found more or less successful.

dissolved in benzene 80, is emulsified in water 50, to which is then added in a fine stream a solution of calcium chloride 200 in water 500. Manganese dioxide ½–1 is added to the product, which is then stirred at the ordinary temperature until oxidation is complete.

1. C. Glaser, U.S.P. Reissue, 13001, Aug. 3, 1908.

2. C. F. Boehringer & Son, D.R.P. 177291, 1904; also D.R.P. 214962, 1906, in which the camphor is to be partially or entirely replaced by the cyclic ethers obtained by condensing aldehydes or ketones with polyhydric alcohols of the general formula, $CH_2OH(CHOH)_x{\cdot}CH_2OH$; the following being suitable: methylene ethylene ether, ethylidene glycol ether, methylene-glycerol, acetonyl-glycerol, benzylidene-glycerol, erythri-diformal, diacetone-arabitol, and triacetone-mannitol.

3. F. Fritzsche & Co., U.S.P. 898943, 1907; E.P. 27927, 1907; F.P., 385700, 1907; D.R.P. 207702, 1905.

4. W. Simmons, Chem. and Drug., 1908, **73**, 198. The electrodes may be made of nickel or platinum, using an alkali manganate as oxidizing catalyst. The *iso*borneol is introduced, in benzene solution, into the anode compartment; the current density may vary between 0.5 and 2 amperes per sq. dcm., the temperature being about 20°. When the oxidation is performed in acid solution (e.g., phosphoric or sulphuric acid), lead electrodes are used, and a bichromate as oxidizing catalyst; the *iso*borneol is introduced in solution in petroleum spirit. The current used is 0.5 amp. per sq. dcm., and the temperature from 25–30°. The oxidizing agent may be caused to form during the electrolysis, by using anodes of manganese, chromium, or their alloys with iron. The electrolytes must be vigorously agitated during the process, to ensure efficient oxidation.

5. C. Glaser, U.S.P. 875062, 1907.

6. Basle Chem. Co., F.P. 387539, 1907.

7. Schmitz & Co., E.P. 3750, 1908; F.P. 387053, 1908; D.R.P. 203792, 1907.

8. Schmitz & Co., F.P. 385352, 1907. For example, 17 k. *iso*borneol are treated with 2.3 k. sodium in presence of 60 k. toluene; the solution is cooled to 10–20°, and dry air, free from carbon dioxide, is passed through. The temperature is raised slightly towards the end of the operation. When no more oxygen is absorbed, the product is washed with water, and the camphor formed is isolated in the usual manner. Instead of the above quantity of sodium, 4 k. calcium may be used, or the oxidation of sodium *iso*borneol (19.3 k.) may be effected by means of mercuric oxide (30 k.) in xylene (60 k.) solution.

9. Schmitz & Co., F.P. 387053, 1907; for example, 5 k. *iso*borneol are heated with 100 k. sodium carbonate and 200 k. manganese dioxide, for 10 hours at 250°. The camphor formed is isolated by distillation with steam. The esters of borneol and *iso*borneol are saponified by heating with aqueous alkali solutions, the oxidizing agent being added during or after saponification.

10. J. Goldsmith, E.P. 17573, 1906.

11. Chem. Fab. Aktien, F.P. 353919, 1905.

12. E. Schering & Co., F.P. 353065, 1905; E.P. 8297, 1905; C. Harries and H. Neresheimer, Ber., 1908, **41**, 38, who have studied the action of ozone upon

The method of A. Hesse[1] is interesting as being based on the well-known Grignard reaction in which an organomagnesium halide is allowed to act on an ethereal solution of pinene hydrochloride. A mixture of ethyl bromide, dry ether and metallic magnesium, is stirred together with warming, until reaction ensues. Just before the reaction is completed, a suitable quantity of pinene hydrochloride dissolved in dry ether is added gradually with stirring, and when the reaction terminates, oxygen or air is passed through the mixture as long as the former is absorbed. Ice is then added, the mixture carefully acidified, and the reaction product, which consists of two layers, carefully separated, the ether in the upper layer being distilled, leaving solid borneol as the residue. This may be purified by crystallization from ligroin, and then converted into camphor by one of the methods of oxidation given. This method of preparing borneol is said to be uncertain as to the yield obtained, an unexpectedly low yield of borneol often resulting. It therefore appears to be too erratic for a practical commercial method. Borneol is said to be directly transformed into camphor by the process of Schmitz & Co.,[2] metal alcoholates of borneol being first produced, which are subjected to oxidation with a peroxide or other oxygen carrier. Other methods for the preparation of borneol are the heating of *iso*borneol for 15 hours in an autoclave to 250° with alkali metals,[3] or with alcoholates and xylene.[4]

The fact observed by Wagner in 1899,[5] that when pinene hydroidide is treated with silver acetate and glacial acetate acid, it is converted into a mixture of dipentene, terpinyl acetate, camphene, bornyl and *iso*bornyl acetates, has been the starting point for the preparation of synthetic camphor.[6] Another method suggested for the commercial

turpentine oil and pinene, found that when the latter was dissolved in carbon tetrachloride and subjected to the action of ozone, a solid and a fluid ozonide were formed, the former being produced in smaller amount. The solid pinene ozonide (pinene perozonide) forms small elastic clusters, possessing an ill-defined crystalline structure, and is insoluble in the usual organic solvents. Analyses give results nearer to the formula $C_{10}H_{16}O_4$ than to $C_{10}H_{16}O_3$. The action of ozone upon pinene and cyclohexene are similar (Ber., 1906, **39**, 2847). When heated on platinum foil, the ozonide explodes, though not violently. When boiled with water it slowly decomposes, and hydrogen peroxide makes its appearance. It decomposes at 80–85°. When decomposed with water, it yields pinonic acid. The oily pinene ozonide, $C_{10}H_{16}O_3$, can be separated from the solid compound, by its solubility in carbon tetrachloride or ether. It has the sp.gr. 1.310 at 20°/4°, and $[\alpha]_D = +11°$ 40′ in chloroform at 20°. On decomposition, either by boiling with water, by heating with potassium hydroxide, or by distilling *in vacuo*, it yields optically active, oily pinonic acid, and possibly pinonic aldehyde.

1. U.S.P. 826165, 1906; D.R.P. 182943, 1908; Aust. P. 31674, 1907.
2. E.P. 28036, 1907; F.P. 385342, 1908; D.R.P. 203791, 1906.
3. Schmitz & Co., F.P. 383149, 1907; J. Hertkorn, E.P. 11248, 1908.
4. Schmitz & Co., E.P. 24806, 1907.
5. Wagner and Prickner, Ber., 1899, **32**, 2302.
6. He regarded the dipentene and terpinyl acetates as the normal products of reaction, camphene and the bornyl acetates being produced at higher temperatures.

production or bornyl acetates is: heating pinene hydrochloride with glacial acetic acid and a heavy metal acetate [1] to 180°, both bornyl and *iso*bornyl acetates being formed. Glacial acetic acid alone,[2] or with zinc acetate,[3] is said to give a more uniform yield and possesses the additional advantage that the reaction takes place at a much lower temperature (125°) than when lead or other heavy metal acetates are used.[4]

Cobaltous chloride [5] is said to facilitate the esterification, as well as a solution of calcium chloride in ethyl alcohol.[6] Where metallic zinc is used, as zinc powder,[7] the temperature must be either kept down or an inert gas introduced, due to the difficulty of controlling the action of the zinc.[8] Zinc chloride,[9] aluminum [10] or copper chlorides [11] are claimed to increase the yield and uniformity of esterification. The transformation is as follows:

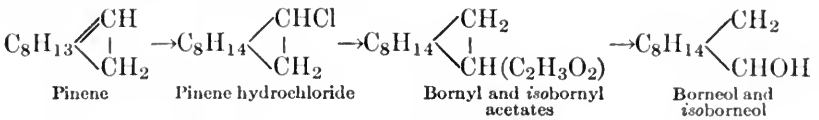

Pinene — Pinene hydrochloride — Bornyl and *iso*bornyl acetates — Borneol and *iso*borneol

The formates have also been suggested as likely bornyl esters for camphor production, and are formed by treating pinene hydrochloride with an excess of absolute formic acid,[12] with the aid of formates in which the chlorine derivatives have a heat of formation above 52 calories.[13] C. Philipp [14] heats pinene chloride (172 parts) with formic acid 500, and zinc oxide 45, the product consisting chiefly of bornyl formate.[15]

1. Behal, Magnier and Tissier, D.R.P. 37322, Anm. K. Bd., 12; O. Wallach, Ann., 1887, **239**, 6; Marsh and Stockdale, J.C.S., 1890, **57**, 965.
2. O. Zeitschel, D.R.P. 294163, 1906; see A. Mayer, F.P. 392182, 1907; 393504, 1908.
3. C. Weizmann, U.S.P. 910978, 1908; E.P. 10798, 1906; Badische Aniline Co., E.P. 6606, 1906; Chem. Fab. v. Heyden, F.P. 365814, 1905.
4. E. Bergs, U.S.P. 903047, 1908; F.P. 364444, 1906, the quantities being, solid pinene hydrochloride, 100; zinc acetate, 54; and crystallizable acetic acid, 150, are boiled in a reflux condenser for 3 hours, the mass is then allowed to cool and stand, the acetic acid being then distilled *in vacuo*, the residue washed with water, rectified and distilled under pressure of 12 mm. at about 102–105°. The corresponding alcohols are obtained by saponification.
5. Chem. Fab. v. Heyden, E.P. 22129, 1907.
6. P. Leemans and V. Turnhout, F.P. 386347, 1908; E.P. 1936, 1908.
7. J. Lutkehermolle. E.P. 14752, 1908.
8. Chem. Fab. v. Heyden, E.P. 24830, 1906.
9. C. Weizmann, D.R.P. 207155, 1907.
10. E.P. 10999, 1906. See Koch, U.S.P. 870829, 1907; E. Rouxeville, U.S.P. 881827, 1908; R. Seifert, U.S.P. 779377, 1905; W. Naschold, U.S.P. 747629, 1903.
11. Chem. Fab. v. Heyden, E.P. 12639, 1906.
12. O. DuBosc, F.P. 370293, 1906, with First Addition dated Dec. 17, 1906, and Second Addition dated June 19, 1908; E.P. 413, 1908.
13. Such as the formates of sodium, potassium, aluminum or lead.
14. U.S.P. 919867, 1909.
15. This is first washed with water and soda, then distilled, *in vacuo*. Bornyl

In the preparation of the higher fatty acid esters, as camphene, *iso*bornyl acetate,[1] bromi*so*valeric esters of borneol[2] and *iso*borneol[3] bornyl oxalate,[4] *iso*bornyl sebacate,[5] and other similarly formed esters[6] the same general methods of formation are used.

Another series of camphor syntheses consists in the formation of bornyl esters direct from turpentine oil, by the action of organic acids, hydrolyzing these esters to borneol and *iso*borneol and from thence to camphor. When French turpentine and benzoic acid are heated together to 150° for 40–50 hours, a mixture of camphene, terpinene, fenchyl alcohol, *iso*borneol and borneol is produced.[7] Dr. F. J. Pond in 1897 obtained a mixture of *iso*bornyl acetate, terpinyl acetate, terpenes and polymerization products, by the application of Bertram and Walbaum's method of acetic-sulphuric acid treatment of American turpentine, which, when saponified with alcoholic potash, formed *iso*borneol to the extent of about 15% of the turpentine employed.

The first attempt to produce camphor synthetically in the United States on a manufacturing scale was undertaken in 1902 by the Ampere Electrochemical Company, operating under the Thurlow patent.[8] The process consisted in treating anhydrous turpentine with anhydrous oxalic acid at a suitable temperature, usually 120–130°, with subsequent oxidation and purification. Borneol, camphor, bornyl oxalate and formate, and indefinite polymerization products were formed. The ethereal salts were decomposed by treatment with lime in excess, the camphor and borneol separated from the mass by steam distillation

acetate, propionate, *iso*butyrate, and other *iso*bornyl esters may be similarly formed. The process described by H. du Boistesselin and J. Verny (F.P. 406005, 1908) for the manufacture of camphor in a single operation consists in treating oil of turpentine, dissolved in benzene, petroleum spirit or other neutral solvent of camphor, with a source of nascent oxygen, such as hydrogen or alkali peroxides or monopersulphuric acid. For instance, a mixture of 90–100 k. of oil of turpentine with 80–120 k. of benzene or petroleum spirit is treated gradually with 25–35 k. of sodium peroxide and sufficient water to make with the latter a solution of 3–5% concentration. The mixture is stirred continuously, the reaction being hastened by the addition of small quantities of suitable known catalytic agents, or else by heating. After about 24 hours, the layer of benzene is separated and the camphor is recovered, with almost quantitative yields, by the evaporation of the solvent. If desired, the quantity of peroxide prescribed above may be replaced by 75–85 k. of monopersulphuric acid.

1. C. Weizmann, E.P. 18280, 1906; 16605, 1907; D.R.P. 205849, 1907; F.P. 385552, 1908.

2. Called Eubornyl. E. Schering, U.S.P. 930054, 1908; E.P. 1682, 1908; D.R.P. 205263, 205264, 1908; F.P. 389327, 1908.

3. F. Luedy, Pharm. Centrahl., 1908, **49**, 625; E.P. 4359, 1908.

4. N. Thurlow, U.S.P. 698761, 1902; 833095, 1906; E.P. 14408, 1908.

5. Chem. Fab. v. Heyden, D.R.P. 181635, 1905.

6. E. Schering, D.R.P. 208487, 1907; C. Weizmann, E.P. 23875 A, 1906.

7. Bouchardat and Lafont, C.R., 1891, **113**, 551; 1897, **125**, 111.

8. E.P. 14754, 1900; D.R.P. 134553, 1900; Aust. P. 10344, 1902; 13088, 1903; Russ. P. 5675, 1901; Addition to F.P. 303812, 1901; abst. J.S.C.I., 1901, **20**, 67, 604; 1902, 21, 1469. Rev. Prod. Chim., 1900, (3), **4**, 36.

and directly oxidized into camphor by chromic acid. In reality a number of unimportant subsidiary products were formed, the amount of borneol and *iso*borneol being insufficient to assure success of the process, which has since been abandoned. The German patent of this company has also been canceled.[1]

Among other syntheses of similar nature may be mentioned the action of certain carbocyclic hydroxy acids, as salicylic, upon oil of turpentine, which yields bornyl and *iso*bornyl salicylates, and they in turn hydrolyze into borneol and *iso*borneol respectively. Camphor is then formed by their oxidation. Similarly when turpentine oil is acted upon by *o*-chlorobenzoic acid[2] esters are formed which may be changed into borneol and from thence to camphor. The recent method of Hertkorn[3] in which a mixture of turpentine oil, an alcohol and boric anhydride is heated for several hours at 120–140°, it is said, gives a uniformly high yield of borneol. The methods of DuBose,[4] A. Sauvage,[5] Verley,[6] A. Shukoff,[7] Schmitz,[8] and E. Schering,[9] are more recent.

It is apparent that, with these synthetical processes, each step has to be very carefully regulated in order to obtain the maximum yield of the desired compounds and to reduce to a minimum subsidiary products of no value in camphor syntheses. It was claimed in 1907[10] that no commercial synthetic camphor was being produced in the United States, and apparently none has been manufactured since. The synthetic camphor produced in Germany, it is stated, has been found satisfactory, and the amount is steadily increasing. The element of labor is an important consideration in this, as well as in other processes. The ratio of cost between the natural and synthetic product is the main factor governing the production of the latter. Any decided drop in the cost of the former would seriously impair the output of the synthetic article.

Camphor Substitutes. With the exception of the high melting point, cost and odor (which to some may be disagreeable), camphor is an ideal latent solvent for the lower cellulose nitrates. As the price of this commodity shows a tendency to constantly rise, many attempts have been and are being made to substitute it in the celluloid industry by materials of less cost. The properties which camphor

1. See Chem. Fab. v. Heyden, F.P. 339504, 1904; D.R.P., C—14519; 175097; Aust. P. 30092, 33720, 1908. Tardy, Ber., 1904, **37**, 305.
2. O. Schmidt, Chem. Industrie, 1906, **29**, 241. 3. U.S.P. 901293, 901708, 1908.
4. F.P. 382790, 383478, 1908. 5. F.P. 389092, 1908.
6. See A. Kuner and P. Milet, F.P. 381226, 1908. 7. U.S.P. 900316, 1908.
8. E.P. 28028, 1907; D.R.P. 212893, 1906; cf. E.P. 26708, 1908; F.P. 398361, 1908; abst. J.S.C.I., 1909, **28**, 854.
9. D.R.P. 213154, 1907. 10. R. Schupphaus, J.S.C.I., 1907, **26**, 383.

combine that are desirable for celluloid, are not approached in a like degree by any known chemical or combination. Camphor possesses the following distinct advantages: (1) It is an excellent gelatinizing agent of quick and deep penetration, and is an energetic solvent of a wide range of cellulose nitrates, from hepta- to ennea-nitrate. (2) It is readily soluble in ethyl alcohol, 1 part dissolving in 0.7 parts of 95% strength at 15°. In methyl alcohol the solubility is about the same, and in acetone somewhat less. (3) It has a high melting (175°) and boiling (204°) point, and gives therefore a solid celluloid, but the temperature of liquefaction is not so high as to cause incipient decomposition of the pyroxylin. (4) Its characteristic odor is usually considered as not unpleasant, and it has no cumulative or deleterious effects on the makers or handlers of the celluloid. Furthermore, the volatility is so low as to make loss from evaporation during storage negligible. (5) It is uncommonly resistant towards chemical agents, not affected by traces of nitric acid which might be liberated from pyroxylin, is not attacked by acids or alkalis, and does not liberate anything on liquefying which would tend to decompose celluloid. (6) It reduces the explosibility, but not the inflammability, of cellulose nitrate when mixed with it. (7) It does not possess a high power of crystallization, and hence does not separate out of celluloid upon heating and subsequent cooling or upon long storage. (8) Light has no effect upon it, and indefinite exposure to light does not darken camphor. This is of great importance, because many of the organic bodies proposed as camphor substitutes, notably the naphthols, naphthalenes, phenylene diamines, toluylene diamines and xylylene diamines darken in daylight. The acidyl derivatives of aliphatic or aromatic secondary amines [1] in general, do not readily gelatinize celluloid, are prone to crystallize and are readily acted upon by light so that the celluloid darkens after manufacture. This is true of acetyldiphenylamine, acetyltolylxylylamine, amylidenedimethylether and amylidenediethylether, although they possess the advantage of being odorless.[2] Formyldiphenylamine, acetylphenyltolylamine and acetylphenylnaphthylamine, which are acid products of secondary amines containing only aromatic radicles, occasion too much softness in the manufactured products, and are much less soluble in alcohol than camphor.[3] They, however, are also odorless. By chlorinating, or brominating *o*-diamines in such a manner

1. Chem. Fabr. Weiler Ter Meer, F.P. 377671, 1906.
2. Deutche Zelluloidfabrik, D.R.P. 132371, 1903; F.P. 312817, 1901. The general group of acetyl derivatives of secondary amines in which the hydrogen atom of the NH_2 group is substituted, comprises their claim, Acetylphenyltolylamine is recommended. See also D.R.P. 80776.
3. E.P. 12863, 1901.

that two halogen atoms are introduced in the *o*-position relative to the nitrogen atoms,[1] amidines are formed which are not fugitive to light, and do not develop acidity on standing from the splitting off of halogen. However, they are poor pyroxylin gelatinizing agents.[2] Amidines derived from *o*-diamines and not containing halogen as methenyl-*o*-toluylenediamine, like the toluylenediamines, discolor upon exposure to light, and for this reason their use is limited to opaque or dark-colored celluloid products.[3] The same observation applies to methylethenyltrichloramidine.[4] Methenyl-*o*-toluylenediamine (methenyl-3.4-toluylenediamine) [5] is precluded from use in transparent celluloid on account of its yellow color. It has been claimed [6] that carboxylic acid derivatives (formyl, acetyl, ethoxalyl and benzoyl) of secondary amines may be produced, which after purification by fractional distillation and then by extraction with organic solvents, result in products which may partially replace camphor with advantage.

There are a number of substitutes which constitutionally might be applicable, but which slowly split off acid, and therefore induce decomposition of the celluloid, often with ultimate combustion, among which are the chlor- and nitro-derivatives of different bodies. The best known of these chlorine derivatives is pinene hydrochloride [7] (m. pt. 125°) prepared by conducting hydrochloric acid gas into turpentine. It has a resemblance to camphor, and is sometimes confused with the true synthetic camphor. Pinene hydrochloride possesses a certain capacity for gelatinizing pyroxylin, but in spite of repeated and elaborate purification, it splits off HCl on keeping, or in combination with celluloid. with consequent decomposition of the latter.

1. E.P. 10228–A, 1906.
2. F.P. 366106, 1906.
3. E.P. 8077, 1906; abst. J.S.C.I., 1906, **25**, 608.
4. This body, together with o-toluylenemethenylamid, ethylethenyltrichloramid are examples of the general group of amidins derived from *o*-diamido compounds of the aromatic series, particularly the amidins which can be derived from *as*-trichlordiamidobenzene and from *v*-tetrachlordiamidobenzene, which have been patented by C. Schraube and E. Laudien (U.S.P. 892899, 1908; D.R.P. 180126, 1906). They are used in the place of camphor in the ratio of 30 to 100 parts nitrocellulose, alcohol being added as in the regular process of conversion. In U.S.P. 892900, 1908, are given quantitative methods for the manufacture of polychloramidins from *as*-trichlordiamidobenzene by reducing *o*-nitroacylamido derivatives (either alphylated or unalphylated) of *as*-trichlorbenzene or *v*-tetrachlorbenzene. Methods of producing the following are given in detail: ethenyltrichloramidin, methenyltrichloramidin, ethylethenyltrichloramidin, ethenyltetrachloramidin, benzylethenyltetrachloramidin, benzyltrichloramidin and methylethenyltrichloramidin. Ethenyltrichloramidin is claimed as especially valuable, and preferably obtained by reducing *l*-ethylacetylamido-2-nitro-3.4.6-trichlorbenzene, possesses the property of swelling nitrocellulose, melts at 116°, and is readily soluble in hot xylene.
5. Berlin Aniline Co., D.R.P. 180216, 1906.
6. Chem. Fabr. v. Weiler Ter Meer, E.P. 16271, 1906.
7. E. Callenberg, F.P. 322506, 1902; O. Nagel, U.S.P. 596662, 1898.

*Iso*borneol obtained by the hydration of camphene,[1] has many of the desirable properties of camphor, melts at 216°, sublimes undecomposed, and is easily soluble in alcohol. The principal drawback to its extensive use, however, is that it is affected by acids and alkalis, and crystallizes from celluloid plastics. Its power of gelatinization is also low. Borneol [2] is of less value. Closely resembling *iso*borneol is the ester, *iso*bornyl acetate,[3] an oil boiling at 285°. This ester resembles camphor chemically, but its gelatinizing capacity however, is small, and it possesses a peculiar, penetrating odor, which to many is repulsive. The complex product obtained by the polymerization of oil of turpentine with sulphuric acid [4] has the same drawbacks. Certain tetrasubstituted ureas [5] in which all the hydrogen atoms of the amino groups are replaced by organic radicals have been proposed, but transparent celluloid prepared with them invariably discolors upon exposure to light and air. After the use of acetanilide [6] (phenylacetamide) had been patented by John H. Stevens in 1893, Schüpphaus

1. A. Behal, U.S.P. 831028, 1906; E.P. 11512, 1905; 1 k. cellulose nitrate is moistened with a sufficient quantity of 86% strength alcohol, and is mixed with a solution of 500 gm. of the borneol dissolved in 500–600 gm. ethyl acetate. The mixture is subjected to centrifugal action or otherwise deprived of solvent.

2. Basler & Co., D.R.P. 185808, 1905; A. Behal, P. Magnier and C. Tissier, F.P. 349970, 1904; E.P. 11512, 1905.

3. Patented (D.R.P. 172941, 1905) by C. Claessen. See also G. Auerbach, G. Z. Sup., 8, 33, Jan. 25, 1907. The gelatinizing power of *iso*bornyl benzoate is said to be higher. W. Lindsay (U.S.P. 961360, 1910) has described the use of benzyl benzoate as a camphor substitute in pyroxylin plastic formation, claiming that inodorous moldable products result when the ester is used in the ratio of 20% (calculated on the pyroxylin) for hard compounds, and 150% for very flexible compositions. A few years ago this ester was obtainable only at a prohibitive price for commercial uses, while today it can be prepared from benzaldehyde for about $0.40 per pound. The latent solvent action of the cinnamic group of balsams, comprising balsams of tolu, Peru and storax, is undoubtedly due to the benzyl benzoate, benzyl cinnamate, cinnamyl cinnamate (styracin) cinnamyl benzoate and phenylpropyl cinnamate which together form the major portion of their composition. In this connection see benzyl acetate and ethylenediacetate. E. Seelig, (D.R.P. 41507, 1889) benzylmethyl ether, benzylethyl ether; C. Mettler, (D.R.P. 166181, 1904) benzylaminobenzyl alcohol, monomethylaminobenzyl alcohol and phenylaminobenzyl alcohol; (Kalle & Co., D.R.P. 97710, 1895).

4. A. E. Rouxeville, F.P. 376269, 1906; E.P. 13023, 1907. After treatment of the turpentine in the cold with an equal weight of sulphuric acid, the mixture is allowed to stand and the upper dark layer separated and washed with water. It is gently heated with 50% nitric acid and the resulting brown powder heated with water, washed free from acid and dissolved in acetone. Nitrocotton is then incorporated to a uniform paste, a plastic mass being obtained upon evaporation of the acetone. It is claimed that the addition of resin produces a harder product and linseed oil the converse.

5. C. Claessen, F.P. 364604, 1906; E.P. 2037, 1906; O. B. Thieme, U.S.P. 831488, 1906.

6. U.S.P. 517987, 1894, as solvent in solid mixtures, U.S.P. 510617, 1893, as solvent in liquid combinations. Acetanilide is used at the present time, especially in Germany, to partially replace camphor. It is the most valuable of the odorless camphor substitutes, and at the same time is comparatively inexpensive. Its difficult solubility is a serious drawback to a more extended use.

followed the next year with formanilide, *o*- and *p*-acetphenetidine, *o*- and *p*-acetoluide, brom- and nitro- acetanilide and acettoluides, and benzanilide,[1] but although the laboratory experiments in the substitution of camphor by these bodies gave considerable promise of success, with the exception of acetanilide, they have proven unsatisfactory except for special purposes.[2] *Sym*-methylbenzoyltrichloraniline[3] and acetyltrichlornitranilide, obtained by nitrating acetyltrichloranilide, were found[4] to insufficiently gelatinize the pyroxylin, and in addition made the plastic too brittle. Methylacetanilide,[5] chloroacetanilide and the alkylnaphthylamines (especially the latter) darken on exposure to light and possess a peculiar and to many, disagreeable odor, which clings to the celluloid for months. Another claim[6] is for the use of the following class of compounds:

Mono- or poly-halogen derivatives of primary aromatic amino compounds, acidyl derivatives of halogenized aromatic amines (e.g., chloroacetanilide); acidyl (formyl-, acetyl-, benzoyl-) derivatives of secondary aromatic amines such as methylaniline or alkylnaphthylamines.

1. U.S.P. 528812, 1894; E.P. 21331, 1894; D.R.P. 80776, 1891. Acetanilide is used at the present time to partially replace camphor in pyroxylin plastics, its greatest drawback to more extended use being its difficult solubility in alcohol. However, it is the most valuable (probably) of the inodorous camphor substitutes, and at the same time is comparatively inexpensive. Of more importance at the present time are the substituted acetanilides, patented by Stevens (U.S.P. 551456.) in 1895, and since greatly elaborated. Methylacetanilide, sometimes called exalgine, is a colorless, odorless, hard crystalline substance, and much more soluble in alcohol than acetanilide. In combination with either camphor or acetanilide, it forms a pyroxylin compound superior to the camphor-acetanilide mixture described in J. Stevens, U.S.P. 517987, 1894. Camphor methylacetanilide mixtures can be manipulated at temperatures below the boiling point of water. Methylacetanilid-phenylacetamide compounds are also easily plastic.

The combination of acetanilide, methylacetanilide and alcohol with pyroxylin, produces a readily moldable and when thoroughly dry, a practically non-shrinkable plastic. Ethylacetanilide, propylacetanilide, butylacetanilide and amylacetanilide, the latter being a liquid, are claimed as efficient camphor substitutes. Ethylacetanilide especially, and its closely allied derivatives, are of great value in forming transparent celluloid sheets. Acet-*p*-phenetidin (*p*-oxyethylacetanilide, phenacetin) formed by acetylizing *p*-amidophenetol, has been patented as a camphor substitute, but appears to have been used principally in pharmacy. U.S.P. 598649, 1898, R. Schüpphaus, comprises acetophenon, benzylidene acetone, benzophenon, phenylbenzyl ketone, oxyacetophenon, benzil, dibenzylidene acetone, trioxybenzophenon, *p*-oxybenzophenon, oxyphenylbenzyl ketone (benzöin), and trioxyacetophenon (gallacetophenon), together with their bromo- and nitro- derivatives. See U.S.P. 410205, 410206, 1889; 528812, 1894.

2. Badische Aniline Co., D.R.P. 176474, 1905; F.P. 363846, 365297, 1906; *s*-methylacettetrachloranilide and benzylacetpentachloranilide were found to melt too high and to be only slight solvents of pyroxylin.

3. Badische Aniline Co., F.P. 363848, 1906; cf. D.R.P. 180208, 1905, being mixed 30% with pyroxylin. See F.P. 363846, 1906.

4. Badische Aniline Co., F.P. 366106, 1906, in which by the method of preparation given, acetyltrichlor-*o*-phenylenediamine and ethenyltrichloramidine, also suitable, are formed.

5. J. Schmerber, F.P. 340268, 1904.

6. Chem. Fab. Weiler Ter Meer, F.P. 341556, 1904. The Chem. Fabrik Greisheim Elektron (E.P. 15855, 1909) replace camphor by dihydroxydiphenylsulphone.

It is well known that camphor in conjunction with chloral hydrate, butylchloral hydrate,[1] chloral alcoholate, phenol,[2] cresol; rosin and naphthalene;[3] resin and castor oil,[4] rosin[5] and various other bodies, form homogeneous mixtures, and that the solvent action of camphor is not appreciably impaired when small amounts of resins etc., are added. However, it also appeared that celluloid containing these bodies upon storage, often developed on the exterior an opalescent bloom from the resin and similar bodies coming to the surface, and this was apparent when as small amount as 5% of the camphor had been substituted. Chloral is precluded on account of odor, toxicity and cost.[6] A number of other bodies have been proposed from time to time, and patents are pending on many more. Among these may be mentioned the ricinoleates[7] and sulphoricinoleates,[8] typified by the magnesium ester; ethyl stearate,[9] castor oil;[10] acetdichlorhydrin, diacetchlorhydrin, and monoacetmonochlorhydrin;[11] ethyl-, glyceryl-,

1. L. Lederer, F.P. 377010, 1907; D.R.P. 220228, 1907. The odor of chloral hydrate has been found to be the greatest objection to its use, provided it could be produced at a cost which would compete in price with camphor.

2. E. Zühl, U.S.P. 700884, 1902; E.P. 27948, 1900; also claims the carbonic esters of phenol.

3. L. Arbezcarme, F.P. 372512, 1906; with a mixture of rosin and naphthalene, the mass being more plastic the greater the percentage of naphthalene. Gillet (F.P. 352853, 1905) uses colophony alone.

4. C. Gillet, F.P. 382270, 382350, 1906.

5. C. Gillet, F.P. 352853, 1905; J. McClelland (U.S.P. 366231, 1887), has described the employment of kauri, Damnara, and dammar resins for this purpose. It is difficult to overcome the tendency to brittleness in plastics containing these resins, even by the addition of castor or other oils.

6. Zühl and Eisemann, D.R.P. 177778, 1904; Aust. P. 9557; 13838, 1903.

7. E. Peyrusson, F.P. 374395, 1906.

8. E. Peyrusson, First Addition, 1907, to F.P. 374395, 1906; abst. J.S.C.I., 1907, **26**, 776.

9. Soc. Anon. Nouvelle " L'Oyonnithe," F.P. 387179, 1908; the formula suggested being ethyl stearate 16, alcohol 20, acetone 14, mixed with cellulose nitrate 50. For use of chlorinated stearic acid, see U.S.P. 962877, 1910.

10. Assadas F.P. 387537, 1907. J. Goldsmith and British Xylonite Co. (E.P. 15914, 1894; D.R.P. 139738, 1904) replace camphor by acid or neutral esters of sebacic acid, or the products obtained by the oxidation of castor or cocoanut oil with nitric acid and esterifying the mass with methyl alcohol. Methyl and ethyl sebacate are specifically claimed. According to P. Bretau and H. Leroux, (F. P. 409557, 1909) compositions adapted for use instead of celluloid are obtained by replacing the natural or synthetic camphor used in the manufacture of ordinary celluloid by an equal amount of any of the following substances: aromatic aldehydes, such as pure or commercial benzaldehyde, and homologous alkylated or arylated derivatives, hydroaromatic ketones, such as hexahydrobenzylketone, tetrahydrobenzylketone and their alkylated homologues, hydronaphthylketones, the complex mixture obtained by oxidation of the product resulting from the catalytic hydrogenation of crude phenols, or mixtures of the above substances. Similar products are also obtained by replacing the nitrocellulose used in the production of ordinary celluloid by organic or inorganic acid esters of nitrocellulose, hydrocellulose or oxycellulose, or by a mixture of these various esters, with or without nitrocellulose.

11. J. N. Goldsmith, E.P. 22662, 1901; D.R.P. 125315, 1900; includes also diphenyl phthalate; D.R.P. 127816, 1906. See E.P. 13131, 1900.

phenyl- and cresyl-*p*-toluene sulphonates and *p*-toluene sulphethylanilide;[1] methylnaphthyl, dinaphthyl, methyloxynaphthyl, dioxynaphthyl[2] and dihydroxydinaphthyl ketones have been advocated.[3] Ethylidene-, benzylidene- and tolylidine-diacetic esters;[4] cyclohexanol or cyclohexanone.[5]

Triphenyl-, tricresyl-, and trinaphthyl-phosphates,[6] their halogen substitution products;[7] triphenyl-, tricresyl-, and trinaphthyl-thiophosphates;[8] diphenyl-, dicresyl-, or dinaphthyl-phosphoric acid anilids, or phenyl-, cresyl-, or naphthyl-phosphoric acid dianilids;[9] and esters of phenyl-, cresyl-, or naphthyl-phosphoric acids.[10] Tetranitrodinaphthyl-, and monochlortriphenyl-phosphate,[11] or tricresyldinitrotrinaphthyl- and dichlordiphenyl-thiophosphate[12] have been suggested, combined with the idea of, at the same time, decreasing inflammability by the introduction of the inorganic acid radical. The esters and anhydrides of phthalic and phthalonic acids, especially monoethyl- and diethyl-phthalate,[13] are more costly than camphor, as

1. Meister, Lucius and Brüning, E.P. 25434, 1899. C. Boehringer & Son (D.R.P. 214962, 1906) have observed that the property of dissolving nitrocellulose is possessed to a large degree by the cyclic acetals, also the condensation products of ketones or aldehydes with polybasic alcohols, so that the said bodies are applicable as substitutes for camphor in celluloid manufacture. Under polybasic alcohols is understood only pure polyhydroxy compounds of the general formula $CH_2OH.(CHOH)_x.CH_2OH$, wherein x may be naught.

2. Zühl and Eisemann, D.R.P. 122166, 1900; they are used in about the proportion of 1 of ketone to 2.5 of pyroxylin by weight.

3. E. Zühl, E.P. 20723, 1900.

4. D.R.P. 174259, 1904; Addition to D.R.P. 172966, 1904; in D.R.P. 173796, 1905, being first addition to D.R.P. 128120, 1901, claim is made for the process of preparing celluloid-like compounds, wherein the phosphoric acid esters used in the original patent as a substitute for camphor are superseded by the products of the reaction between phosphorus oxychlorides or phosphorus trichlorides or phosphorus thiochlorides, and dichlorhydrin, or mixtures of these reaction products. The resulting compounds are oily masses, said to be insoluble in water and very readily soluble in alcohol.

5. F. Raschig, U.S.P. 900204, 1908; D.R.P. 174914, 1905.

6. Zühl & Eisemann, D.R.P. 128120, 1901; Russ. P. 7848, 1903; Pharm. Centralh. 1902, **43**, 115; E. Zühl, E.P. 8072, 1901; 23445, 1902; F.P. 309962, 1901, and First Addition thereto dated Feb. 22, 1902; abst. J.C.S.I., 1902, **21**, 65, 719.

7. Zühl & Eisemann, D.R.P. 142832, 1901, the products specified being neutral dichlorphenol-, tetrachlorphenol-, dichlorcresol-, dichlornaphthol-, and tetrachlornaphthol-phosphates.

8. Zühl & Eisemann, D.R.P. 140164, 1901; Russ. P. 8893, 1904.

9. Zühl & Eisemann, D.R.P. 144646, 1902.

10. Zühl & Eisemann, D.R.P. 142971, 1902.

11. Zühl & Eisemann, E.P. 4383, 1902. They have also patented (D.R.P. 139589, 1900; Russ. P. 8855, 1901) carbonic esters of phenols, cresols, and naphthols (diphenyl carbonate, dicresyl carbonate, and dinaphthyl carbonate); methyl- and benzyl-oxanilates (D.R.P. 128119, 1901); mono- or poly-halogen substitution products of aromatic compounds (dichlorbenzol, monochlornaphthalin) in their D.R.P. 128956, 1902.

12. E. Zühl, E.P. 872, 1901; 4383, 1902; abst. J.S.C.I., 1901, **20**, 74; 1902, **21**, 65.

13. E. Zühl, E.P. 4326, 1901; F.P. 308372, 1901.

also are the oxalic and oxamic esters.[1] Diacetylacetic-benzylidene ether[2] is not to be found in Beilstein or Richter's "Lexicon"; naphthalin[3] with its moth-ball odor, is difficultly soluble in alcohol; benzylidine diacetate,[4] *m*- and *p*-monochlorbenzylidene diacetate and benzylidene mono- and di-acetoacetate, all melt under 83°, and have a peculiar odor; phenyl formate, propionate, tartrate, and citrate all possess the characteristic phenol odor[5] and at present are but chemical curiosities; naphthyl acetate,[6] amylidene dimethyl ether, amylidene diethyl ether,[7] and dihydroxydiphenylsulphone[8] have characteristic and repulsive odors. Dextrine[9] and glucose, levulose and lactose, are water-soluble,[10] and hence of no value in celluloid intended for collars, cuffs, or other uses where the material would be exposed to water or the elements.[11] [12]. Some of the above-named

1. E. Zühl, F.P. 309963, 1901.

2. Claessen, F.P. 363090, 1906; in D.R.P. 178133, 1906; E.P. 20037, 1906, is claimed urea in which all hydrogen atoms are replaced by organic radicals. Examples, as diethyldiphenylurea (m. pt., 54°); 5-diethyldiphenylurea (m. pt., 79°), and tetraphenylurea (m. pt., 183°).

3. J. Chaubet, E.P. 13287, 1899; F.P. 292983; Graph. Beob. **9**, 219; Am. Apoth. Z. **21**, 31; Pharm. Centralh. **41**, 317. Also patented by Soc. Gen. pour la fabr. des Matières Plastique (D.R.P. 117542, 1899). See U.S.P. 543197. The Rheinische Gummi- u. Zelluloid Fabrik (D.R.P. 140480, 1902) have patented the following naphthalin derivatives as camphor substitutes which differ from naphthalin in being odorless, and otherwise are as efficient. They are α- and β-phenylnaphthalin, α- and β-benzylnaphthalin, α- and β-dinaphthyl, and α- and β-naphthylmethane. α- and β-naphthyl acetate (Zühl & Eisemann, D.R.P. 118052, 1900) are also odorless, and have been patented to replace camphor.

4. C. Claessen, D.R.P. 172966, 1904, and First Addition, 174259, 1904; 173020, 1904; F.P. 363090, 1906; the cellulose nitrate is treated with a solution of 3.5 k. of the benzylidene compound in 10 l. alcohol and the mass rolled at a temperature between 60–90°. In D.R.P. 118052, 1900, Zühl & Eisemann replace camphor by α- or β-naphthyl acetate, which is odorless, ethyl alcohol being the solvent. In D.R.P. 119636, 1900, they claim esters of naphthoxylacetic and phenyloxylacetic acids, and submit the following as the desirable combinations: 1.5 k. phenyloxylacetic acid with 10 k. nitrocellulose; 3 k. amyl naphthoxylacetate with 6 k. nitrocellulose; 50 k. naphthyl naphthoxylacetate, $C_{10}H_7OCH_2COOC_{10}H_7$ with 100 k. nitrocellulose. See also the celluloid-like masses of C. Claessen, Aust. P. 25335, 27060, 1906.

5. E. Zühl, E.P. 17948, 1900.

6. E.P. 11761, 1900; has a very powerful and distinctive odor.

7. E. Franquet, F.P. 312817, 1901.

8. A. G. Bloxam, E.P. 15855, 1909.

9. D.R.P. 168497, 1903.

10. D.R.P. 140155, 1902; 168497, 1903.

11. The Badische Aniline Co. have patented (E.P. 8077, 10228, 1906), the use of certain polychlor-anilines and -amidines, as camphor substitutes, giving methods of preparation and melting points of ethenyl-, methenyl-, methylmethenyl-, ethylethenyl-, benzylethenyl-, benzenyl-, and methylmethenyl-trichloramidine; monoethylacetyl-, monomethylacetyl-, ethylbenzoyl-trichloranilide; *as*-methylacetyl-, *s*-benzylacetyl-, benzylbenzoyl-, and *s*-benzylacetyl-tetrachloranilide. Also (D.R.P. 180126, 1906) amidines derived from aromatic *o*-diamines, there being specified methyl-*o*-toluylene diamine (m. pt., 113–115°); ethylethenyltrichlor-*o*-phenylenediamine (m. pt., 116–117°), obtained by the reduction of ethylacet-*o*-nitrochloranilide and methylethenyltrichloramidine (m. pt., 120–121°) obtained by methylating the sodium salt of trichlorethenylamidine.

12. Meister, Lucius and Brüning, E.P., 25434, 1899; D.R.P. 122272, 1899;

products are either imperfectly described, of much higher cost than camphor, or of no apparent value for the use intended. A number fall under the latter heading, and appear to indicate—in the absence of more detailed methods of application—a lack of knowledge of the application of solid solvents in the intricate processes of conversion and gelatinization to which the pyroxylin is subjected in the various transformations from pyroxylin into the finished plastic.[1] In the

U.S.P. 758335, 1904, have evolved a series of camphor substitutes, in which aromatic sulpho acids of the general type $R\text{-}SO_2A$ are used to partially or wholly replace the camphor, In this formula, R represents an aromatic radical or its substitution product—such, for instance, as phenyl, tolyl, xylyl, naphthyl, nitrophenyl, nitrotolyl, alkyloxyphenyl, etc.—and A indicates either an aliphatic or aromatic ether residue, such as oxyalkyl or residue of mono or polyvalent alcohol—for instance, CH_3OH, C_2H_5OH, $C_6H_5CH_2OH$, $CH_2(OH)\text{-}CH(OH)\text{-}CH_2(OH)$, etc.—and oxyalphyl or residue of a monovalent or polyvalent phenol, such as phenol, naphthol, cresol, resorcinol, dioxydiphenylmethane, etc., or a NH_2 group, which, non-substituted, may be substituted once or twice. This is an exceedingly important group known under the general name of Plastol. The members constituting it are of more interest at the present time than when they were patented, due to the fact that several have been found to be latent solvents of acetylhydrocelluloses and acetyloxycelluloses. The most important of this group are as follows: benzenesulphamid, *p*-toluenesulfamid, *p*-chlorsulphamid, benzenesulfoethylamid, benzenesulfodiethylamid, *p*-toluenesulphoethylamid, *p*-toluenesulfodiethylamid, acetbenzenesulfamid, acet-*p*-toluenesulfamid, benzoylbenzenesulfamid, benzoyltoluenesulfamid, dibenzylbenzenesulfamid, dibenzyl-*p*-toluenesulfamid, dibenzyl--*p*-toluenesulfoimid, dibenzenesulfoimid, benzenesulfanilid, *p*-chlorbenzenesulfanilid, dibenzyl-*p*-chlorbenzenesulfanilid, *p*-toluenesulfanilid, dibenzyl-*p*-toluenesulfanilid. Benzenesulfo-methylanilid, -ethylanilid, -*o*-toluid, -*p*-chloranilid, -*o*-phenetidin, -*p*-phenetidin, -α-naphthylamin, -β-naphthylamin, and benzenesulfodiphenylamin. *p*-toluenesulpho-methylanilid, -ethylanilid, -*o*-toluid, -*p*-toluid, -*m*-xylidid, -*p*-chloranilid, -*o*-phenetidin, -*p*-phenetidin, -α-naphthylamin, -β-naphthylamin, -diphenylamin, -phenylhydrazin, -acidphenylether, -cresol, -β-naphthol, -α-naphthol, -acidethylester. Benzenesulfo-acidphenylether, -*p*-cresol, -β-naphthol; dibenzenesulfo-2.7-dioxynaphthalin, *p*-chlorbenzenesulfo-β-naphthol, di-*p*-sulfo-2.7-dioxynaphthalin, *p*-chlorbenzenesulfanilid, *p*-toluenesulfamido acetic acid, *p*-toluenesulfamido ethyl ester; *o*-, *p*-, *m*-amidosulfbenzoic acid; *o*-, *p*-, *m*- sulfamidoethylester. The melting points of these sixty-three compounds are within the range of pyroxylin decomposition with but few exceptions, and the melting point may be materially lowered in a number of instances by mixing two or more in various proportions, as for instance, a mixture of *p*-toluenesulfamid (m. pt. 137°) and *p*-toluenesulfomonoethylamid (m.pt. 58°) gives a series of melting points at any degree between these two extremes.

The Rhenische Gummi- & Zelluloid Fabrik (D.R.P. 140885, 1902) replace camphor by glucose, levulose, and lactose; in D.R.P. 168497, 1903, by sugar and dextrin, and in D.R.P. 140263, 1902, by acid esters of the above. Those which have been found suitable are, acetochlorhydrose, glucose dibutyrate, glucose distearate, glucose ditartrate, glucose tetratartrate, glucose diacetate, tri-, tetra-, and oct-acetyldiglucose; pentacetyllevulose, tetracetyllactose, lactose tartrate; saccharose mono-, tetra-, hepta- and saccharose octa-acetate. See U.S.P. 366231, 1887.

I. J. N. Goldsmith (E.P. 13131, 1900), proposed acetin or any acetic esters of glycerol, acetochlorhydrin, benzicin or the benzoic esters of glycerol, methyl, ethyl, propyl, butyl and amyl phthalates and succinates, pulegone as found in oil of pennyroyal, thujone as obtained from thuja oil, and although it is admitted they are more costly than camphor, a lower volatility and greater solvent efficiency is claimed. See E. Zühl, E.P. 10213, 1901; F.P. 310942, 1901; Weiler Ter Meer, E.P. 16271, 1906; G. Z., 1908, **23**, 20, Dec. 4, gives résumé of camphor substitutes patented.

amount of money expended and the time, energy and patience brought to bear in attempts to discover the equal of camphor as a solid and latent cellulose nitrate solvent, this problem ranks in importance with the catalytic production of sulphuric acid, or the commercial synthesis of indigotin. Its successful solution would revolutionize the present methods of pyroxylin plastic formation. While whole series of camphor substitutes may be abandoned for years as unsuitable, some chemist may discover a substitute, perhaps of little value in itself, but which, when combined with a previously discarded product, may give those desirable results that will amply repay for all the toil and expense of the previous work.

Lowering the Melting Point of Camphor. The principal objection to the use of camphor is its high melting point, and which is above the decomposition point of pyroxylin. So much heat is required to mold the camphor-pyroxylin compounds that there is always a tendency to discoloration and increased liability to decomposition. Hyatt early realized this fact and added small amounts of ethyl alcohol,[1] while others added turpentine,[2] paraffin,[3] and castor oil.[4] This difficulty to a certain extent has been overcome by leaving in the plastic a small amount of alcohol or other low-boiling solvent, and this lowers the melting-point of the camphor and permits the manipulation of the compounds without destroying the good qualities of the material. There is such a wide difference, however, between the volatility of camphor and the liquid menstruum or menstrua employed, that it is difficult to control the plastic properties by such means, because the relative proportion of camphor and liquid solvent varies according to the conditions of evaporation or seasoning. All the previously described camphor substitutes, no doubt, have some peculiar or inherent merits, often not disclosed in the literature, and difficult to infer. All are important in that a combination of two or more may be discovered which when combined in definite proportions, may lower the melting point of camphor to a readily workable temperature and still preserve its other good points. Combinations of camphor and other bodies in respect to their combined melting points are analogous to those alloys like Rose's metal—their combined melting point cannot be determined in advance, is not a mean of the several melting points, and may be even lower than either of the constituent ingredients.[5] While many of the previously noted camphor substitutes are undoubtedly intended to lower the melting point of camphor,

1. U.S.P. 156352, 1874.
2. D. Spill, U.S.P. 91377, 1869.
3. C. Reagles, U.S.P. 173865, 1876.
4. D. Spill, U.S.P. 97454, 1869.
5. As an example, chloral hydrate (m. pt., 57°) or phenol (m. pt., 43°) when mixed in equal amounts with camphor (m. pt., 175°) form a liquid of m. pt. lower than 10°.

it appears that J. H. Stevens was the first scientist to make an exhaustive study of the substitutes from the sole point of view of lowering the melting point of camphor. It was the object of Stevens' inventions to always include camphor, i.e., as an adjunct rather than a substitute, and to form pyroxylin compounds in such a manner that their plasticity is independent of the presence of liquids in the plastic. To accomplish this, certain solid substances were employed, always in conjunction with the camphor, and which possessed the power of forming with the camphor and pyroxylin, compounds which are plastic at much lower temperatures than if they were omitted. The solid substances proposed by him combined with the camphor to form a solid solvent, i.e., a solid which when melted by heat actively dissolved the pyroxylin. Dinitrotoluol,[1] naphthalene,[2] dinitroxylol,[3] *p*-nitrotoluol,[4] camphene hydrochlorate,[5] *p*-acetxylid,[6] and the crystalline pyrazolone derivatives[7] were disappointing. It was found that d methylhydroquinone, thymoquinone, thymol, benzoylguaiacol,[8] salol,[9] betol,[10] naphthol benzoate,[11] salacetol,[12] and benzoic anhydride[13] produce valuable effects that cannot be obtained with camphor alone.[14]

1. Best results are obtained by using molecular quantities with camphor, but its yellow color was found to be a serious disadvantage. See U.S.P. 542692, 1895.

2. U.S.P. 543198, 1895. Of practically no value.

3. U.S.P. 553270, 1896; of the isomeric dinitroxylols, the adjacent meta, (1:2:3:4) and *sym.* meta, (1:3:4:6) are considered the better solvents; *m*-trinitroxylol is to be avoided, hence in nitrating xylol for this purpose the temperature should be kept down.

4. U.S.P. 552209, 1895. An extremely low melting-point or softening point may be produced with this, and one which is workable in water sufficiently cool to stand immersion of the hand.

5. U.S.P. 552934, 1895, turns the plastic yellow in time, and liberates HCl on storing.

6. The *o*-, *m*- and *p*-xylids are difficult to work, and produce very hard plasties. They are used in limited amounts only, and for especially hard effects. See U.S.P. 564343, 1895.

7. U.S.P. 566349, 1895. Antipyrin (dimethylphenylpyrazolon), tolypyrin (tolylphenyldimethylpyrazolon), salipyrin (antipyrin salicylate), and tolysal (tolypyrin salicylate) were the only ones tried which gave any promise.

8. U.S.P. 607554, 1898, dimethylhydroquinon, thymoquinone, thymol and benzoylguaiacol, being the compounds which lowered the melting point of camphor.

9. Salol is a colorless, crystalline powder, without odor when pure, and may be used for colorless and odorless plastics. An odorless camphor substitute as salol or acetanilid is superior to camphor for certain uses, as for instance in waterproofing boxes intended for cosmetics, solid fruit essences, flavors and candies, where the "vile" smell of camphor must be overcome. Methyl and ethyl acetanilid, especially the former, have been used considerably for this purpose.

10. U.S.P. 572134, 1896, betol or naphthalol, is colorless and crystalline and considerably lowers the m. pt. of camphor.

11. Or benzonaphthol. Betol and naphthol benzoate form pyroxylin compounds which, when seasoned, are possessed of more moderate plasticity under heat, as a rule, than mixtures made with salacetol or benzoic anhydride.

12. Resembles salol in action and possesses additional advantage of being a solvent in itself in the melted state. It forms colorless products.

13. Easily soluble in wood alcohol and acetone, a latent pyroxylin solvent, colorless, crystalline.

14. U.S.P. 568101, 1896, J. Stevens and F. Axtell.

Methyl, ethyl, propyl, butyl, and amyl carbanilates were described and patented in 1896.[1] Continuing the research, the next year the crystalline chlorides of toluol and nitrochlorides of benzyl,[2] and the crystalline chlorides, bromides, nitrochlorides and nitrobromides of benzene were investigated[3] and their uses as adjuncts to camphor made known. Alkyl citrates,[4] carbonates,[5] and certain crystalline organic sulphur compounds,[6] it is claimed, all have distinct advantages in special combinations and in the production of plastics of definite physical requirements. If the melting point of an odorless body acting like camphor could be lowered to about 60°, and obtainable at about the present price of acetanilid, celluloid manufacture would receive an immediate and decided impetus; and going a step further —if at the same time the inflammability was reduced to a point not greater than cotton cellulose, the ideal goal of the pyroxylin plastic producer would be attained.

1. The solvent property of these urethanes decreases with an increase of molecular weight.

2. U.S.P. 583516, 1897; *o*- or *p*-nitrobenzyl chloride was found most efficient.

3. The crystalline phenolbromides and phenolchlorides, naphthalene chlorides, and camphor bromide (monobromcamphor) are all inclined to yield yellowish products, and phenoltrichloride, on account of a slight acid reaction, is apt to bleach out delicate tints.

4. U.S.P. 568105, 1896. Trimethyl-, triethyl-, tripropyl-, and tri*iso*butylcitrates, trichlorethyl citrate and acetyltriethyl citric ether, all are latent solvents of pyroxylin, employed best with a strong solvent like wood spirit, their special value lying in the fact that the compounds made with it are not easily affected by alcohol or other compounds which readily attack pyroxylin mixtures on account of their affinity for the solid solvent present.

5. The alkyl carbamates have low melting points, gradually ascending from methyl carbamate 52°, to amyl carbamate 60°. The plasticity of the seasoned products decrease with increased mol. wt. All are readily soluble in methyl alcohol and amyl acetate. Ethylidine urethane, benzyl carbamate, neurodin (acetylparaoxyphenyl urethane) or thermodin (acetylparaethoxyphenyl urethane) give with camphor, products of very easy plasticity. For properties of the mixed carbamates see U.S.P. 568106, 1896.

6. U.S.P. 572135, 1896, and comprising trional (diethylsulfonmethylethylmethane), sulfobenzid (diphenylsulfon), sulfonal (diethylsulfondimethylmethane) and sulfocarbanilid (*s*-diphenylthiocarbamide). The Chem. Fab. Griesheim-Elektron replaces the camphor by dioxydiphenylsulphone, which has a marked gelatinizing effect on nitrocellulose. Perhaps someone in scanning the list of suggested and patented direct and latent pyroxylin solvents herein recorded may be led to combine them in manner or proportions now unknown, and thus add a new field of usefulness to the cellulose nitrate arts. Taking a retrospective view of the various chemicals and classes of bodies which have been brought forward as camphor substitutes of value in plastic formation, and which have been enumerated herewith, we see that just as the liquid pyroxylin solvents of value are comprised in but comparatively few groups, i.e., alcoholic, ketonic and aliphatic esters, so also the solid and latent solvents may be reduced to a simple classification as follows: (1) Camphor, followed by various borneol, bornyl and allied derivatives, all closely related to camphor. (2) The acetanilid group, perhaps next in importance, and including the amido and imido benzene group. (3) The plastol group, which is being brought into prominence at the present time as containing meritorious cellulose acetate latent solvents. (4) The heterocyclic ketones. Nearly all the bodies which have passed the experimental stage as camphor substitutes may with propriety be classified in one of the above four groupings.

CHAPTER VIII

PAINT AND VARNISH REMOVERS. TURPENTINE SUBSTITUTES

Many compounds are to be obtained for removing old paint, varnish, and enamel from wood and metal, which, in general, owe their efficiency to the presence of corrosive acids or caustic alkalies. They are usually aqueous solutions or emulsions of the more common inorganic [1] or organic [2] acids, or the hydroxides or carbonates of the alkali or alkaline earth metals.[3] It is customary to combine the above with a thickening agent [4] to retard evaporation, and cause the mixture to more readily adhere to a vertical surface. The paint is removed by actual decomposition and disintegration, and the surface to which the preparation has been applied may be so attacked as to be in no condition for recoating without separate treatments to counteract the effect of the paint-removing composition. With those woods containing large amounts of natural coloring matter, such as cedar, juniper, chestnut, mahogony, ebony, rosewood, or walnut, the acid or alkali may so affect the color and graining as to necessitate a redressing or staining.

Disintegrating Paint Removers. Under the general name of Tologen,[5] a series of paint removers appeared in England in 1886 con-

1. Nitric, hydrochloric, sulphuric, or phosphoric acids.
2. Acetic, formic, butyric, oxalic, tartaric, citric, or trichloracetic acids.
3. Sodium, potassium, ammonium, barium, strontium, calcium, magnesium.
4. Glycerol, treacle, glucose, starch, flour, dextrin, acacia, tragacanth, tallow, lard.
5. de Liebhaber, E.P. 4737, 1886; the recent (U.S.P. 897862, 1908) process of G. Hull is, in many respects, similar to the older Tologen patents. He proposes to use: Potassium cyanide, 1 lb.; oxalic acid, 2 lb.; whiting (commercial calcium carbonate), 3 lb.; wood alcohol, 1 qt.; water, 3 qt.; oil of sassafras, 2 fl. oz. These ingredients are to be thoroughly mixed by agitation. The potassium cyanide is first mixed in 1 qt. of hot water (100°) until it comes to dissolution. The oxalic acid is then mixed in 2 qts. of hot water (100°) until it dissolves. After the ingredients have been dissolved, they are poured into a vessel and agitated until both liquids are thoroughly mixed together. Next, the whiting is stirred in cold water until it becomes of the consistency of paste, after which this floating portion of the paste mixture is added to the mixed solution of potassium cyanide and oxalic acid, and the whole mixture then agitated until all effervescence ceases. The various ingredients, by the irreactions, produce calcium oxalate and a limited quantity of calcium cyanide.

sisting of lime, sodium carbonate, oxalic acid and potassium cyanide. Notwithstanding the poisonous nature of the cyanide, it is said that they had an extensive sale. The paint-removing formula of Staley [1] consists in first applying a thick mixture of caustic potash, corn meal and yellow ocher, after which aqueous oxalic acid and Venetian red in the form of a paste is rubbed on the denuded surface. Hope [2] prefers to mix air-slaked lime with aqueous sodium carbonate, thus forming calcium carbonate, to which paraffin oil is added in the proportion of 3 lb. each of the lime and soda ash and 2 oz. of the latter. The object of the oil is undoubtedly to retard evaporation during the penetration of the uncombined soda ash, although not so stated.

Eliot [3] advocates a similar mixture, but replacing the paraffin oil by flour to increase the viscosity of the mixture. With the preparation of A. Neidhardt,[4] cabinetmakers' glue 7, tallow 1, and starch 2, are united with coloring matter. C. Beck [5] combines salt 1, with lime 5, and sodium carbonate 1, and adds 30% water, after which the mixture is to be heated just before use. According to the observations of Oakes [6] and corroborated by Brentini,[7] Irish moss is of distinct value. The former recommends 8% moss boiled with 50% sodium hydroxide solution 40° Bé. strength, and an equal volume of potassium hydroxide added when cold. The latter claims to have obtained best results by taking 4 lb. moss, 3% each methylated spirits and fullers' earth, and 30% water, after which 16% each sodium and potassium hydroxides are added. Both preparations give best results when used cold.[8] In removing paint from a smooth metallic surface, Firth [9] recommends treating the metal with a hot bath of dilute sodium and potassium hydroxides, followed by a thorough washing and quick drying, that action of the alkalis on the metal may be reduced to the minimum. [10]

1. U.S.P. 673665, 1901. 2. U.S.P. 683177, 1901. 3. E.P. 346673, 1905.
4. U.S.P. 816359, 1905. 5. U.S.P. 743427, 1903.
6. E.P. 10301, 1888. 7. E.P. 11398, 1888.

8. Many absurd processes are to be found among the Patent Office Records of the various countries, as, for instance, U.S.P. 721150, 1903, containing a combination of horse, cow, chicken and human excrement with lye and flour. See also U.S.P. 723089, 1903.

9. J. N. Firth, E.P. 5541, 1902.

10. Among the other methods devised where actual decomposition of the paint is necessary to its removal, are the processes of G. W. Honeymoon (E.P. 3617, 1870) which consists in boiling oak wood with soda ash and lime and adding oxalic acid, ammonium oxalate and sulphuric acid; M. Benedictus (E.P. 10960, 1886) employs water 23, flour 4, borax or alum 1, soap 4, and caustic potash and soda, together 11; E. Tessen, (E.P. 17544, 1894) obtained best results with an emulsion of linseed and paraffin oils, with lime, soda and potash, starch being added to thicken. Baron de Liebhaber (E.P. 4940, 1895), caused slaked lime to act on

Solvent Paint Removers. It appears that in 1885, E. Compton, an English inventor,[1] first embodied this idea in a patented process, which consisted in applying by brushing, a mixture of glycerol, oil of citronella, olive oil, naphtha and lard, and afterwards removing the mixture and disintegrated paint by wiping. The principles upon which the foregoing process is based, followed by the improvements to be described, rendered obsolete the mechanical and destructive removers noted above, which are now being rapidly replaced by a class of solvent paint removers—neutral mixtures of rapid penetration—which not only actually disintegrate and soften the paint or varnish substance without affecting the structure of the wood or metal underneath, but possess the additional advantage of containing no water to rust a metallic surface, or raise the "grain" or warp a glued or veneered exterior. With but few exceptions they are entirely organic in their composition, and do not act upon the utensils or affect the hands of the manipulator. It is apparent, therefore, that these preparations may be used on the most delicate or costly woods with no danger of injury whatever. When nitrobenzene enjoyed more favor as a pyroxylin solvent, H. Crowther combined it with benzol, the low volatility and excellent dissolving power of the former liquid undoubtedly producing an efficient combination, the principal drawback being the odor. The formula of G. L. Ball [2] was benzol, alcohol and fusel oil, and this appears to be the first mention of fusel oil for this use. Other patented processes embracing the idea of the solvent action of the remover, and without disintegrating the paint, have been obtained by Priestman,[3] Gill,[4] Eberson,[5] Adams and Elting [6] and Osborn,[7] and are combinations of neutral solvents in varying proportions.

The investigations of Carlton Ellis resulted in the production of a paint and varnish remover of this class, which has received protection

soda ash, cryolite or sodium fluoride, which, when moistened, liberated caustic soda, the nascent alkali removing the paint; H. J. Haddon (E.P. 15140, 1898) preferred sawdust as the thickening agent, with a mineral oil and caustic alkali. (See also A. Klee, E.P. 14114, 1900; G. Willock, E.P. 16930, 1901; A. Corti, E.P. 21103, 1903.)

1. E.P. 11428, 1885.
2. E.P. 14884, 1896.
3. U.S.P. 705139, 1902, a combination of fusel oil 1, with kerosene 2, aqua ammonia 2 (strength not specified), sal soda 20, and water 40 parts.
4. Mixture of spermaceti and mineral, Japan or carnauba wax with methyl alcohol and benzol, toluol, or xylol (E.P. 22427, 1902).
5. E.P. 18300, 1903; 55% alcohol, 25% carbon bisulphide, 20% benzol with a small quantity of wax added to minimize evaporation.
6. E.P. 16060, 1903; a surface removing composition of paraffin with benzol and acetone, the paraffin being added in a molten condition.
7. E.P. 14974, 1903, consisting of amyl acetate, benzine, benzol, paraffin, and carbon bisulphide.

in U. S. Patent 714880, of December 2, 1902. Ellis has apparently reduced the problem to a scientific basis which has been formulated on the following principle: (1) a wax or waxy body is dissolved in (2), a hydrocarbon or other suitable solvent, with the subsequent precipitation of the wax in a gelatinous state by the addition of, (3), an alcoholic body miscible with the solvent, but practically a non-solvent of the wax. For solvents may be suggested benzol 50%, 90%, or crystallizable, or its homologues toluol or xylol, aniline and its homologues toluidine and xylidine, cumol and mesitylene, lutidine, and its homologues and isomers. The ethers dichlormethane, chloroform and carbon tetrachloride and light petroleum oils which are good solvents of wax, would be included. The alcoholic body or gelatinizing agent, which must be miscible with the solvent, must also exert only a slight solvent action upon the waxes. Such bodies would be methyl, ethyl, propyl, butyl, amyl, benzoyl, benzal, benzyl, and allyl alcohols. The waxy bodies used as gelatinizers consist of the waxes proper as carnauba and beeswax, hydrocarbons as paraffin, ceresine or ozokerite, glycerides as Japan wax or curriers' hard grease, and metallic soaps as aluminum palmitate or oleate, zinc or magnesium stearate, and barium, copper or manganese resinate. The formula recommended by the originator is to prepare a solution by heat of 4 parts each paraffin and curriers' hard grease in 8 parts benzol. While still warm the solution is gelatinized by the gradual addition of 7 parts methyl alcohol, and the mixture stirred continually until cold, the major portion of the paraffin precipitating out in long thin plates on cooling. The claim is made that the energetic loosening effect is secured by combining the hydrocarbon or analogous solvent with the alcoholic softening agent. To counteract the tendency to evaporate, and decrease the difficulty of applying to perpendicular or inclined surfaces, the composition is made of the requisite consistency by gelatinization. The formula of G. Dosselman and P. Neymann[1] consists of paraffin 45 lb., benzol 135 gal., and acetone 137 gal. A. Hoover[2] employs preferably alcohol 32, benzol 32, and Venice turpentine 1 (parts by weight).

The remover is applied to the surface with a rag or brush, a few minutes allowed for the solvent action to take effect, when in most instances the paint may be readily wiped off or scraped with a putty knife or other blunt instrument, a final wiping with benzine being beneficial. The patentees of this process found it necessary to protect their rights in the courts. The Chadeloid Co. was organized for this purpose, which eventually demonstrated priority of claim. A

1. U.S.P. 907685, 1908. 2. U.S.P. 902404, 1908.

number of preparations,[1] are to be obtained on the American market, as licensees of the above company.

Where the paint or varnish contains a large amount of shellac or other resin, and a lesser proportion of linseed and other drying oils, Ellis[2] recommends the use of a remover such as propyl alcohol 16, ethyl alcohol 3, benzol 1, ceresin wax $\frac{1}{3}$, and wood flour $\frac{2}{3}$.[3] In using these compounds a roughing layer of the remover is preferably applied to the varnished surface by brushing, the fluid being allowed to act until folds or roughnesses are formed in the varnish skin. A further amount of remover is then applied in a similar way so as to flood the surface, the stiffening material (flour) being indicated where inclined or vertical surfaces are to be treated.[4]

The use of sulphur chloride (S_2Cl_2) has been advocated,[5] the preferred modification being carbon bisulphide 75, benzol 25, sulphur chloride 10,[6] the latter being replaceable in equal amount by sulphur or sulphurized linseed oil. As a thickening agent, aluminum resinate[7]

1. Known under the commercial names of "Phenoid," "Eclipse," "Zip," "Mistic," "Acme," "Ad-el-ite," "Blitz," "Ball's," "Varnigo," "Apex," "Yankee," "Boston," "Supreme," "Magic," "Devoe," "Cauteria," "De Ronde," "Mirac," "Ab-Lu-Ent," "Electro," "Conqueror," "Monarch," "Wizard," "Patton's," "Solvo," "Parrot," "Eureka," "Peninsula," "Instint," "Meltaway," "Taxite," "Takitoff," "Jewel," and "Faultless."

2. U.S.P. 901895, 1908.

3. The wax is preferably first dissolved in the benzol, which is then mixed with the alcoholic bodies by agitation at a suitable temperature, the wood flour being gradually incorporated to form a homogeneous mixture. Another illustrative remover contains approximately butyl alcohol 100, propyl alcohol 10, benzol 1, benzine 2, all thoroughly incorporated by agitation.

4. The wax-softening agents referred to act upon the wax normally present in the shellac, and aid in softening the same, the alcoholic bodies acting as softeners upon the resin esters in the shellac body.

5. C. Ellis, U.S.P. 904250, 1908; the formula of M. Daxe (U.S.P. 948814, 1910) consists of benzene 2 gal., ethyl alcohol 2 gal., acetone 1.5 gal., wax 4 oz., kerosene 8 oz., and petroleum jelly 0.5–1.5 lb.

6. In the preparation of a composition of this character, the thickening material or the substance from which the thickening material is ultimately derived, is first dissolved in those fluids which are solvents of it, then the other remover constituents which are non-solvents of the thickener are added, thus producing a supersaturated solution in which the thickener is thrown out of solution in a very fine state of subdivision, easy of suspension. With sulphur chloride, the eliminant would be an alcohol, which decomposes the chloride, throwing out a quantity of free sulphur. Sulphur chloride is also decomposed by contact with moist air, free sulphur being formed. When the remover, therefore, is applied to the coated surface, the atmosphere acts upon the undissolved chloride, decomposing the same, with the formation of a protecting pellicle of sulphur on the surface, thus retarding evaporation. Where wood alcohol is the sulphur eliminant, free sulphur, certain oxidation products as thiosulphuric and tetrathionic acids, and chlorine substitution products result, among which is hydrochloric acid. With sulphur, the alcohol again acts as the eliminant, throwing a portion of the sulphur out of its solution in carbon bisulphide and benzol, and retarding the evaporation of the volatile solvents, when exposed to the atmosphere.

7. C. Ellis, U.S.P. 910049, 1909. The composition may be prepared by thickening turpentine to the desired consistency by the addition of aluminum resinate made by precipitation of resin with an aqueous alum solution, and then adding

or potassium, sodium, ammonium, magnesium and barium acetates have been proposed,[1] these acetates being soluble in methyl and ethyl alcohol.[2]

Miller[3] in 1903 suggested alcohol 3, amyl acetate 2, and acetone and ethyl butyrate each 1 part, but the presence of the latter solvent in the proportion stated would make the preparation too expensive for use. The same year, Guy Osborn[4] introduced carbon bisulphide, and submitted the following excellent formula: carbon bisulphide, benzene and benzine, 5 each, amyl acetate 2.5, and acetone 37.5 (all gallons), with 10 lb. paraffin (m. pt. 120° F.). Such a formula would be especially applicable in the carriage-painting industry, where the wood finish is "built up" by means of a large number of coats. By judicious manipulation, it is possible to remove the upper or varnish coats, while the lower colored, the so-called body or filler coats, remain unattacked. By simply revarnishing the surface the wood is restored to its original appearance and beauty. With the older disintegrating methods, it would be impossible to remove the superficial layers and leave the under coats intact.

about 10% acetone. While turpentine in itself has very slight action on finished surfaces, yet when mixed with alcohol, acetone, or similar loosening finish solvents, it acquires considerable paint-removing power. The especial value of this preparation is stated to be for ceilings, for, being of a buttery consistency, it may be applied with a brush as a paint.

1. C. Ellis, U.S.P. 925429, 1909. In U.S.P. 956320, 1910, Ellis combines acetone 10 gal.; benzene 10 gal.; ceresin 7 lb. and cork dust 15 lb. Allyl alcohol, chlorobenzene, chlorhydrins, Peruvian bark refuse, bayberry tallow and Chinese wax are also claimed. L. Ornstein (U.S.P. 931335, 1909) mixes ether 10%, methyl or ethyl alcohol 55%, aniline oil 35% (all by volume), and thickens with a small amount of wool fat.

2. The solubility of the acetate in the alcohol or ketone may be facilitated by digestion at the boiling-point of the solvent, or by extraction in a Soxhlet, in which a saturated solution is obtained. In this manner, some esterification occurs, and acetic esters are formed which in themselves are energetic paint and varnish solvents. It is claimed a suitable remover may be prepared by dissolving 10–20 parts potassium acetate in 100 parts methyl alcohol, or methyl acetone, and 3 parts waxy or soapy material in benzol 100, mixing the two solutions, and adding sufficient sulphuric acid to neutralize the alkalinity due to the esterification of the alcohol. This precipitates potassium sulphate in conjunction with the waxy substances, which together form the agglutinating or stiffening material.

3. U.S.P. 725002, 1903; the formula of J. Dickson (U.S.P. 853685, 1907) is acetone 8, benzene and commercial toluene 2 each, acetic acid and benzine 1 each (all gals.), paraffin and spermaceti 2 lb. each.

4. U.S.P. 744095, 1903. R. Stewart (U.S.P. 931519, 1909) takes 30 parts of aniline oil and 1 part of paraffin, and adds to it 200 parts of acetic ether, ethyl butyrate or valerianate, or amyl acetate, butyrate or valerianate. The formula of L. Kramer (U.S.P. 882947, 1908) contains alcohol 3, benzol 1, acetone 1, lard oil ¾ (all pints) and stearic acid ½ lb. J. Dickson (U.S.P. 853685, 1907) patents acetone 8, 90% benzol 2, commercial toluol 2, 67% acetic acid 1, benzine 1 (all gal.), paraffin and spermaceti, each 2 lb. The most effective manner of mixing these ingredient is to place the spermaceti and paraffin wax in a tank of benzine which is thoroughly agitated until all lumps have disappeared and then add the acetone, benzol, toluol, and acetic acid, when with a few minutes' further agitation the remover will be ready for use.

While Stoak and Peck [1] prefer amyl acetate, alcohol and benzene 4 each, and benzine 62° and acetone 3 each, Beck has obtained best results with the rather unique combination [2] of 2 volumes carbolic acid mixed with 1 of oil of citronella. Even if efficient, such a preparation could have but a limited application on account of the poisonous nature and danger in handling the first ingredient.[3]

An inconvenience in use arises from the fact that the gelatinizing agent, when present in sufficient amounts to effectually retard evaporation, and especially on reduction of temperature in the winter months, is very apt to precipitate and adhere quite tenaciously to containers, requiring in some instances heat to again bring the refractory wax into suspension. Michaelis [4] proposes to remedy this difficulty by the use of petrolatum (vaseline) in the proportion of 3% mixed with benzine 62°, and 35% wood or grain alcohol, contending that such a solution of petrolatum in "benzol in methyl or ethyl alcohol remains liquid at almost any prevailing temperature and never gelatinizes or solidifies, thus enabling the workmen to pour the compound out, and apply with a brush at all times." On the same principle as a wax, the petrolatum covers the liquid with a thin film or pellicle, and thus prevents too rapid evaporation.

Nearly all the processes recommend a final washing with benzine to remove the wax or fat, and to obviate the necessity of this additional treatment, Michaelis [5] replaces the wax with a water-freed soap 5%, dissolved in wood or grain alcohol, and adds this to the usually dissolving agent benzene or other liquid. As such a preparation contains no solids insoluble in cold water, the surface from which the paint has been removed may be readily cleaned by means of soap and water or by water alone, sufficient soap already being present.

All the solvents heretofore mentioned are inflammable, and Ellis [6]

1. U.S.P. 747898, 1903.

2. A. Corti, U.S.P. 784474, 1905, has combined a solvent and mechanical remover by using alcohol 500, slaked lime 300, "soda" 75, petroleum 60, soft soap 75, and finally incorporating 450 parts of chalk.

Ellis, U.S.P. 811044, 1906, has obtained patent protection for the use of methyl acetone. P. Celler (U.S.P. 951369, 1910) prefers cerasin and paraffin 1 oz. each, benzene 5 pints, methyl alcohol 3 pints and aniline oil 1 oz.

3. Eberson (F.P. 341832, 1904) has published a somewhat elastic formula consisting of alcohol 30–40, acetone 25, benzene 20, and the balance carbon bisulphide, with not more than 0.5% wax. Wilson (F.P. 390422, 1908) has given a process for removing paint consisting of beeswax 22.5 gm., 450 gm. of a mixture containing 92.5% nitrocellulose, methyl alcohol 1 l., benzine 3.3 l. This is an impossible combination, the solvent being insufficient to keep the nitrocellulose in solution in the presence of the amount of non-solvent benzine stated. J. Manns' (E.P. 4592, 1909) composition includes a solvent used with a vehicle formed by the conversion of a heavy mineral oil into a colloidal form. *E.g.*, colloidal mineral oil 12, stearin 6, wood flour 5, benzene 35, benzine 8, carbon tetrachloride 14 and methylated spirit 20.

4. U.S.P. 823801, 1906.

5. U.S.P. 812582, 1906.

6. U.S.P. 817141, 1906; E.P. 3412, 1906; F.P. 363506, 1906.

proposes to overcome this by the addition of carbon tetrachloride, a non-inflammable but volatile solvent, together with other solvents of less vapor tension, so as to give a predominant evaporative tendency to the former liquid. A mixture of carbon tetrachloride 15, grain alcohol 10, and amyl acetate 1, with not to exceed 8% of wax, is specified.[1] More recently[2] he has advocated phenolic and cresylic esters, as methyl and ethyl carbolates or cresylates.

A process for the use of viscose as a solvent paint remover has been devised,[3] the viscose, which is really the vehicle, being incorporated with 25–30% of its weight of sodium sulphite crystals ($Na_2SO_3.7H_2O$) and 50% of its weight of zinc oxide, the mixture being then treated with carbon bisulphide in the usual manner, finally dissolving in water to make a 10% solution. This is mixed with petroleum oil before applying. F. Govers[4] esterifies commercial phenol or preferably cresol (cresylic acid) to a mixed acetate, the paste-like mass of phenyl or cresyl acetates being mixed with benzol and other paint-removing fluids.[5] Cresol possesses in a marked degree the power of softening and disintegrating paint and varnish.

Proteid-Containing Paint Removers. As previously stated, most modern types of paint and varnish removers have incorporated with them fats and waxes to better adapt them to remain on vertical surfaces, partly to furnish an evaporation-retarding superficial scum, and partly to lessen evaporation by a reduction of the vapor tension of the volatile solvents. Nearly all the solvents employed in solvent paint removers are bodies of relatively high vapor tension, which is materially reduced by the presence of the wax or agglutinating body. In those removers which are quite thick, there frequently is sufficient of the wax to render the body of admixed volatile solvents rather thick, and as the dissolved paint constituents are difficultly diffusible, the activity of such a body, as a rule, is confined to the immediate zone of its solvent action. Inasmuch as the volatile solvents employed are relatively expensive, this is evidently uneconomical. In addition, old painted and varnished surfaces, as a rule being dirty, wetting of its

1. On the same principle, tetrachlorethane, b. pt., 135°, ought to be more efficient than carbon tetrachloride with a b. pt. of but 77°.
2. U.S.P. 919143, 1909.
3. E. G. P. Thomas, J. Bonavita, and M. O. Olivier, E.P. 9577, 1899.
4. U.S.P. 885151, 1908; also Ser. No. 413763, Feb. 1, 1908.
5. One k. of commercial gray acetate of lime (finely ground) is heated with 1 k. of commercial cresylic acid for from half an hour to an hour. A half k. of commercial strong sulphuric acid is then added gradually while the mass is stirred. The resulting mixture is of a brownish color (due to the impurities in commercial gray acetate) and after cooling has the described pasty consistency, and is almost if not quite odorless, having none of the characteristic cresol odor. It probably consists of calcium sulphate, the excess of calcium acetate (if any), cresyl acetate and intermediate products, perhaps some cresyl acetic acid, and a little free acetic acid.

surfaces by such removers may not be as quick as desirable, the fatty matter having a tendency to restrain or limit wetting. Furthermore, the solution of the wax in the volatile solvents reduces the solvent power of the latter as applied to paint.

Peter T. Austen and F. G. Maywald have invented a process for removing paint and varnish [1] which apparently overcomes the majority of the objections outlined above. Instead of restraining evaporation of the paint-dissolving liquids by the chemical and physical action of the waxy and fatty matter, an emulsion of casein or other albuminous or proteid matter is made use of in conjunction with the usual solvents.[2] The aqueous carrier may be a water solution of any substance having the power of producing a permanent aqueous emulsion with immiscible solvents, which solvents after emulsification, the patentees claim, retain their full solvent capacity.[3] Serum albumin, commercial egg albumen, gelatin, Irish moss, or "Chinese gelatin"[4] are said to be suitable emulsifiers, and especially alkaline caseinates, as ammonium caseinate. The remover may be prepared by emulsifying methyl alcohol, benzine 62°, benzene and acetone, with a compound emulsifier containing ammonium caseinate and Chinese gelatin.[5] It is

1. U.S.P. 846080, 1907; E.P. 5238, 1907.

2. "Proteids and other bodies capable of producing permanent emulsions of hydrocarbons and like bodies with water, do not as a rule dissolve in such bodies or in the volatile solvents used in paint removers."

3. The aqueous layer which surrounds each individual droplet of the volatile solvent prevents its contact with air, and therefore prevents evaporation. It does not, however, prevent its contact with paint or varnished surfaces. The same power of thoroughly wetting oily bodies which enables such an aqueous solution to emulsify volatile solvents, many of which are hydrocarbons and more or less oily in nature, and insoluble in and not wetted by pure water, enables it also to wet thoroughly a painted or varnished surface and to penetrate the same effectually. By reason of surface-tension phenomena, an albuminoid solution which of itself may be quite fluid, and the various volatile solvents most of which are very mobile when emulsified together, produce a mixture which, while liquid and flowable, and not ordinarily thicker than rich cream, has a considerable degree of consistence, and which is well adapted to remain on non-horizontal surfaces. There is, however, in such a body in emulsion, considerable internal movement of the suspended droplets of volatile solvent in the milky thickness employed in this instance, and the painted surface to be cleaned is continually exposed to the attack of fresh droplets of the solvent.

4. Closely related to commercial agar-agar.

5. For this purpose an ammoniacal solution of casein is made by dissolving 80 gm. commercial casein in 75 gm. aqueous ammonia 26° Bé., and 145 gm. of water. 50 gm. of this solution are mixed with an equal weight of 5% aqueous solution Chinese gelatin. With the 100 gm. aqueous emulsifier so formed, are thoroughly admixed and emulsified 40 gm. methyl alcohol, 40 gm. benzine 62°, and 80 gm. each benzol and acetone. These volatile solvents may be first mixed and then emulsified, or they may be added successively during emulsification. Another mixture of general application may be made from the same quantities of the above solvents emulsified with 100 gm. 10% serum or egg albumin solution or with 100 gm. 5% gelatin solution. More or less of a colloidal carbohydrate, agar-agar, Irish moss or Chinese gelatin, may be advantageously used in connection with any of these proteid solutions, as contributing to the permanency of the emulsions produced with the various paint solvents.

desirable that the finished preparation be of the consistency of rich cream to permit ready application to variously inclined surfaces. The material is brushed or rubbed on, and after a few minutes scraped off, together with the softened paint. It is stated that the volatile solvents employed may be as high as half the total mixture without making the consistence injuriously stiff.

Stripping Paint Removers. The previously described classes of removers are satisfactory on smooth surfaces, where the loosened paint may be readily removed with a spatula or blunt knife, but in carved and composition work it is difficult to penetrate the fine carvings, beading, or relief figures, and the paint once loosened and allowed to dry will still adhere tenaciously, and require subsequent applications before it can be removed with ease. Austen, Maywald and Govers[1] have discovered that the concentrated fatty acids, as formic, acetic, propionic and butyric, or their substitution products, in conjunction with colloids dissolved therein, possess the power of not only softening and disintegrating paint, but of combining with such softened and loosened paint and varnish to form tough, coherent masses or skins, which may be readily lifted and stripped or peeled as such from the coated surface. The remover is applied in the usual manner, which coalesces with the softened coating to form consistent leathery or rubber-like masses of sufficient mechanical strength to be readily removable in sections of considerable size by simply lifting the loosened skin and stripping the surface of the wood.

Acetic acid is usually employed, in conjunction with albuminous material as colloids, and specifically casein or the caseinates and often in conjuntion with direct varnish solvents as methyl acetone, benzene, amyl acetate and fusel oil.[2] Phenol, cresol, or the cresylic acids are stated to be useful additions, either free or condensed with the acetic acid,[3] the entire combination offering a mixed solvent suitable to a wide range of the oils, driers, and bases,[4] entering into modern paints. It is claimed that a suitable remover may be formed by dissolving 400 gm. casein in 500 cc. glacial acetic acid, and 1,000 gm. cresylic

1. U.S.P. 871750, 1907. Application filed Apr. 16, 1907, No. 368486.

2. See also Serial No. 368488, filed Apr. 16, 1907, and 356347, 356348 filed Feb. 8, 1907.

3. The "condensation product" claimed by the patentees may be made by heating together 6 gm. cresylic acid and 4 gm. glacial acetic acid, in which 4 gm. casein is afterwards dissolved. This is the nucleus of the colloided stripping remover, whose dissolving power is widened by the usual liquid solvents. It is also claimed that the addition of about 30% of a 10% gutta percha solution in benzol increases the tenacity of the resulting film.

4. In the case of white-lead pigments, carbonates as of iron and zinc, and other inorganic bodies more or less soluble in the acid employed, the disintegration and evolution of CO_2 from the carbonate aids materially in the removal of the paint.

acid, 1,000 cc. commercial benzol or toluol being next incorporated with the first three ingredients. Or 1,000 gm. 90% formic acid, 1,000 gm. casein and 2,000 gm. phenol, the phenol being first mixed with the formic acid, after which the casein is introduced.[1] Benzol, toluol or xylol if added, are incorporated last.[2]

It must be remembered in the use of paint removers of this type, and containing a considerable proportion of concentrated acetic acid, that the latter is an excellent solvent of glue, and that in applying such a composition to veneered work or to composition carvings made from sawdust and glue under pressure, the solvent action of the acetic acid on the glue may be sufficient to injure the work unless great care be taken to neutralize the excess of acid immediately after the paint has been peeled from the surface.[3]

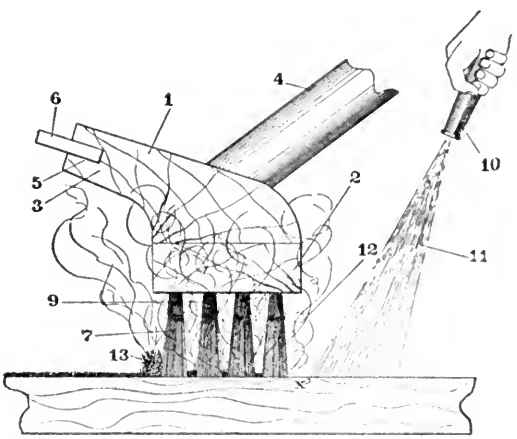

FIG. 45.—The Wilson Mechanical Finish Remover.

J. Wilson has patented a device (Fig. 15) for removing mechanically the disintegrated varnish and paint from irregular surfaces, after

1. In the forms described above, either with or without volatile solvents, it is essential that sufficient colloid be present to impart a fairly thick or semi-solid consistency, the latter being preferable, as it permits of a thorough and even application by brushing, and deposits layers of economical and efficient thickness to all parts of the coated surface irrespective of its contour or the intricacy of carving, as of woodwork or molding.

2. Casein is more soluble in formic than in acetic acid and tends to agglutinate in large masses, difficult to handle. The phenol appears to produce a more regular combination.

3. One explanation offered of the action of a typical remover of this class and containing a fatty acid, phenol and casein, is that the phenomenon is analogous to the nature of one solute displacing another from solution; that the oily and resinous components of the paint vehicle displace in a measure the casein, throwing it out in a form to produce a coherent integument, and binding together the particles of the disintegrated paint.

they have been softened by the solvent. By means of steel wires 0.009 inch in diameter (7 in Fig. 45) the mass is scratched up, the tufts of bristles being placed sufficiently far apart for ready evaporation of solvent, and thus diminish possibility of clogging. In especially old and hardened paint, a second application of solvent remover applied as indicated is advised.[1]

Gottschalk [2] proposes to utilize the paint removed by the various solvent processes by exposing the residue to the action of the vapors from a mixture of volatile hydrocarbons and alcohol in a closed vessel at the ordinary temperature, whereby they are sufficiently softened, it is said, to admit of being worked over in the usual manner.

With old and heavy coats of paint, not all solvent removers within the author's experience are sufficiently speedy, in their penetration, so that in such instances burning off with a torch is the quickest, most satisfactory and economical method. In *Journal of the Society of Chemical Industry*, 1907, **26**, 243, Babington gives detailed methods for the analysis of commercial paint removers, and the estimation of wood spirits in the same.

Turpentine Substitutes. As far back as 1855, J. Rimell deposited a sealed communication with the English Patent Office which, when opened on March 19 of the same year, was found to contain a method of producing a liquid substitute for turpentine, which consisted in preparing an extract from potatoes to which common salt, alum and litharge were added. This was followed by the process of W. Perkins nine years later, who prepared a substitute for turpentine by distilling together a mixture of amyl alcohol and "hypochloride of calcium." While neither process is of present value, the dates show that over a half century ago it began to be realized that the demand for turpentine would soon exceed its production. Since that time many attempts have been made to produce a satisfactory substitute for turpentine from liquids obtained from various sources, which would be able to compete with it commercially, but as yet without satisfactory results. The essential constituent of oil of turpentine is "pinene," which in addition to possessing excellent dissolving power for vegetable drying oils, is at the same time a solvent for a wide range of resins. Failures at producing a satisfactory substitute for turpentine appear to be due to the fact that pinene is chemically an unsaturated compound, that is, it possesses the power of absorbing oxygen from the air, and in so doing changes from a thin liquid to a thicker fluid and finally to a smooth resinous mass.

1. U.S.P. 936842, 1909.
2. E.P. 8617, 1905; D.R.P. 158310, 1904; abst. J.S.C.I., 1905, **24**, 681.

These properties, peculiar to turpentine, are not shared by the substitutes which have been proposed from time to time, therefore as yet, there has appeared no entirely satisfactory turpentine substitute.

At the present time the market is flooded with innumerable turpentine substitutes—containing practically no turpentine—known under such names as "Russian," "Rock," "Mineral," "Near," "A," "Solvent," "Compound," "Virgin," "Prairie," and "Pine" turpentines; "Chicago," "Norway," "Varnish," "Sunoco," "Turpteen" and "Erco" spirits; "Turpalin," "Terrabentine," and "Nuturps," which in general are built up on the following lines: The major portion (85–96%) is some form of petroleum product,[1] usually a benzine of Baumé 57–65°.[2] To this may be added a small amount of real spirits of turpentine to impart the familiar odor, for as is well known, it is impossible to distinguish pure turpentine by the odor, for that peculiar sweet smell is entirely due to the crude dip from which the gum spirit is contaminated. The specific gravity of turpentine varies within the limits 0.855–0.870. Benzine of 57–65° Bé. has a gravity of 0.754–0.724, and hence a simple determination of gravity would detect the adulteration at once. In order to produce a liquid of the same gravity as pure spirits of turpentine, carbon tetrachloride with a specific gravity of 1.6 is added in sufficient amounts to bring the combined gravity up to that of turpentine. From 3–9% is required, depending on the gravity of the original petroleum distillate. The petroleum fraction mentioned above has a boiling point of 145–165°, about the same as true turpentine, so that by a combination of (say) 85% benzine 58°, 6% carbon tetrachloride and 9% true turpentine, a liquid of the same density and boiling point as an unadulterated turpentine results, and these are the two tests usually relied upon in a superficial examination. Benzine exhibits a well-marked fluorescence, which is apt to be noticeable in a combination as the above, while turpentine does not fluoresce. To partially mask this, small amounts (0.5–1.5%) of mononitronaphthalin are added.[3] Judging from the immense quantities of these adulterated or rather imitation products consumed, the public prefers to pay double and, in some instances, triple cost of benzine and gasoline in this combina-

1. C. Fendler, L. Franx and W. Stüber (Z. Nahr-Genussm., 1909, **19**, 373) report examining a turpentine substitute consisting entirely of "solvent naphtha," or "heavy benzol."

2. The higher the degree Baumé, the lighter the gravity.

3. For determination of nitronaphthalin see Leonard, C.N., 1893, **68**, 297, and Holde, J.S.C.I. 1894, **13**, 906. In greases, nitrobenzene is used to mask the fluorescence, but would be unsuitable in this instance on account of the odor. For method of commercial manufacture of a turpentine-petroleum-carbon tetrachloride substitute, see A. Pollet, F.P. 354425, 1905, and First Addition thereto dated Apr. 12, 1906.

tion, than to add the gasoline as such directly to the paint as a thinner. The use of the word " turpentine " in connection with these imitations, is, of course, entirely a misnomer, these products being turpentine in no sense of the word.

Those who have had experience with these fictitious products have noted that while still good solvents for linseed and other drying oils, and therefore freely miscible for thinning purposes, yet the " life " and wearing qualities of paint so thinned are very materially decreased, especially for outdoor work where the paint is exposed to the elements. In addition it has been found that the ratio of oil to pigment must be considerably increased in order to obtain an equal covering power with same tenacity in film. This means diminished covering power, and hence increased cost of painting per unit area. In shoe polishes, in which turpentine is used in large amounts, the substitutes are decidedly inferior, their inferiority being especially noticeable in attempting to dissolve refractory waxes such as carnauba. The oil-soluble nigrosines, to which the black color of shoe polish is due, are difficultly soluble in benzine, but readily so in pure turpentine. This appears after manufacture in an increased tendency of the polish to granulate and separate, where a benzine imitation has been used.

The amount of benzine and carbon tetrachloride present in a turpentine substitute may be determined quite accurately, by first distilling 100 cc. of the sample with a long Hempel or other fractionation tube, and collecting the distillate which boils at not above 85°, carbon tetrachloride boiling at 77°. The benzine or true oil of turpentine will not begin to distill much before 125° is reached. Heating of the original sample in a fractionating flask on the water bath until no more distillate passes over, is another satisfactory way. The benzine may be determined by shaking 50 cc. of the original sample with 150 cc. sulphuric acid 66° Bé. (93–94%) and the separation of an upper layer after vigorous shaking indicates benzine, which after standing over night in a graduated cylinder may be read off. This method is accurate enough for the majority of commercial purposes.[1]

1. Other methods at present employed are (1) Fractionation and examination of fractions by physical methods; (2) Polymerization with sulphuric acid and measurement of residual oil (benzine); (3) Repeated polymerization as in (2) and determination of refractive index of residual oil; (4) Polymerization with nitric acid. For details of above methods see F. Richardson and J. Bowen, J.S.C.I., 1908, **27**, 613; McCandless, J.A.C.S., 1904, **26**, 981; Burton, Am. Ch. J., 1890, **12**, 102; A. Paul, J.I.C., 1909, **1**, 27; P. Conradson, J.S.C.I., 1897, **16**, 519; J. H. Costa, An., 1908, **33**, 219; J. Marcusson, Chem. Zeit., 1909, **33**, 966, 978, 985; R. Morrell, J.S.C.I., 1910, **29**, 241; Armstrong, J.S.C.I., 1882, **1**, 478; H. Herzfeld, Chem. Ztg., 1910, **33**, 1081; M. Vezes, C.R., 1910, **150**, 698; Louise, C.R., 1910, **150**, 526; A. Eibner and O. Hue (Chem. Ztg., 1910, **34**, 643, 657); J. Costa, An., 1910, **35**, 112. " Determination of Petroleum Derivatives in Turpentine Oil," P. Nicolardot and L. Clement (Bull. Soc. Chim., 1910, **7**, 173); for manufacture of turpen-

Regenerated turpentine (the turpentine recovered in the manufacture of synthetic camphor) is characterized by its high boiling point. While about 80% genuine oil of turpentine will come over below 165°, regenerated oil of turpentine only begins to distill at a temperature of 170°.

tine oil substitutes, see O. Pellnitz, F.P. 394467, 1908, Addition, Dec. 8, 1908; D.R.P. 202234, 1908; A. Poulverel, F.P. 400180, 1908. For distinction between gum spirits, wood turpentine from both live and dead timber, rosin spirits and petroleum substitutes, see C. Holley, 17th Ann. Rep. N. Dak. Agr. Expt. Sta., 1906, part 2.

CHAPTER IX

PYROXYLIN SOLUTIONS

With the possible exception of the smokeless powder industry, the dry cellulose nitrates have few if any commercial applications, and it is only after solution in a direct or latent solvent that they become of value for use in the arts. Before attempting to place any considerable quantity of these nitrates in solution, it is customary to first prepare a small experimental batch, and study the solubility and other physical properties of the pyroxylin, in order to arrive in advance at an idea of the solubility, deposit, and fluidity of the pyroxylin, and the suitability of the liquid menstruum for the purposes intended. In the author's judgment this preliminary examination and selection of pyroxylin has not been accorded the prominence it deserves. As has been stated, at present it is an impossibility to so control the factors of the nitrating process as to produce at will a nitrated cellulose of a fluidity, solubility, and percentage of insoluble residue which may be calculated in advance. When placed in solution, the diversified nature of a combination of commercially pure liquids, and their wide variation in composition and physical deportment, undoubtedly add to the complexity. Although it is quite possible, as in the manufacture of the pyrocellulose smokeless powders, to introduce a definite percentage of nitrogen into the cellulose molecule, yet no definite relationship between that nitrogen content and the viscosity of the dissolved product has as yet been established. Therefore at present the determination of the percentage of nitrogen in a nitric ester is no criterion of its fluidity in solution, and conversely. The desirability, therefore, for specific selection of a pyroxylin for a definite use, thus becomes more evident, and is being recognized more and more as the uses of the cellulose nitrates multiply, and the advisability of specialization becomes more obvious. Granting, as we must, the inability of the producer to duplicate consecutively the physical characteristics of a given nitrate from a purely commercial point of view, the firm who possesses the ability and knowledge of trade requirements, and who manipulates nitrate and solvents by specific

selection with this end in view, is the manufacturer whose products are in greatest demand, because more uniform in practical working qualities.

FIG. 46.—The Coles Shaker.

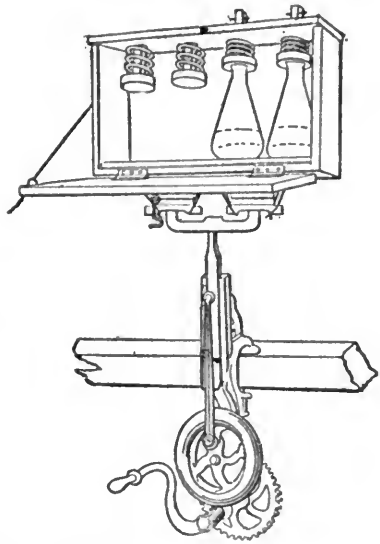

FIG. 47.—The Dudley Shaking Arrangement for Four Solutions.

Dissolving Small Amounts of Pyroxylin. Various devices have been suggested to minimize labor, but especially to economize time in bringing small amounts of pyroxylin into solution. For bronzing liquids, collodions, and other thin fluids, an arrangement similar to the Coles' Milk Shaker (Fig. 46) has been found very useful. It is operated by hand, each turn of the crank wheel giving ten distinct shocks to the contents of the tumblers. Solution may be facilitated and heavy particles readily broken up by the introduction of shot in the tumblers. Glass beads or clay marbles are also used, and for quantitative work the tumblers may be lengthened, their diameter reduced, and graduated in cubic centimeters or otherwise. Where a comparative determination of two or more substances is desired, or their speed of solution determined, as two or more pyroxylins in a given compound fluid, or the same nitro-

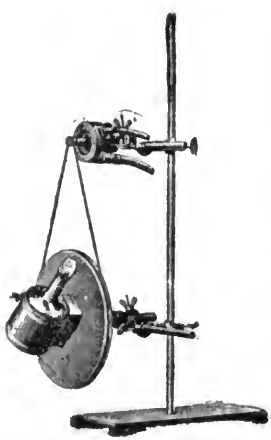

FIG. 48.—The Rabe Shaker.

cotton in varying formulas, the apparatus of Dudley (Fig. 47), which is designed for four Erlenmeyr flasks each of 12 oz. capacity, or the mixer of Rabe (Fig. 48) is convenient. The

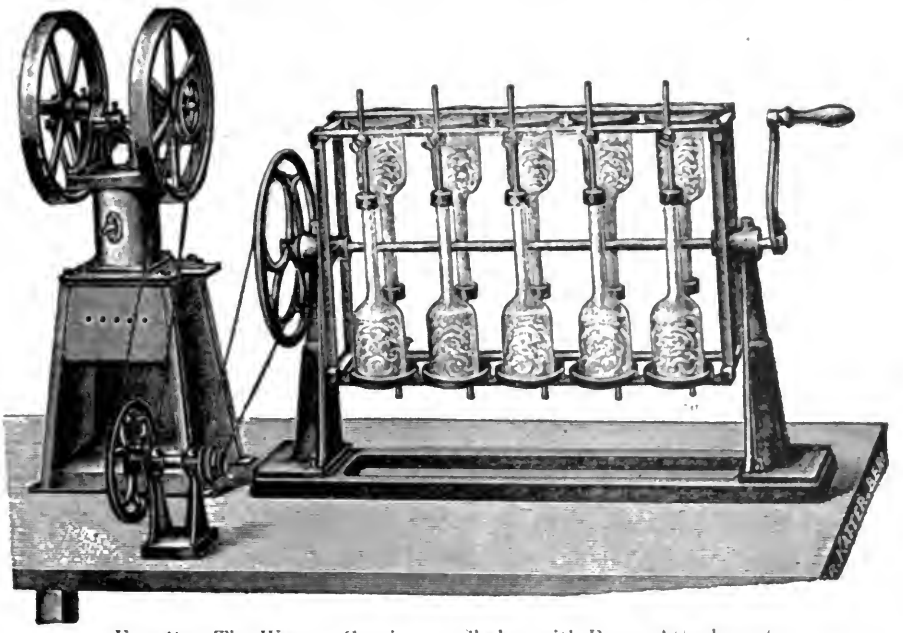

Fig. 49.—The Wagner Continuous Shaker with Power Attachment.

latter is arranged to take water-motor connection and will then accommodate quantities up to one liter. For a number of samples

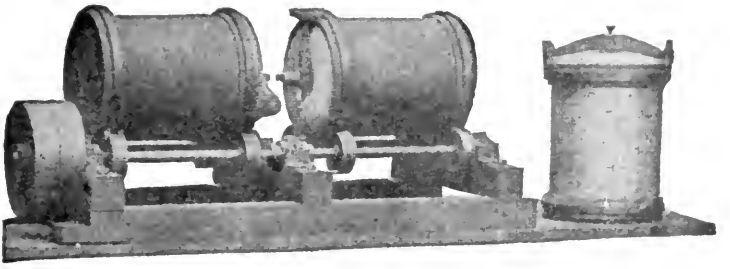

Fig. 50.—The J. H. Day Co. Jar Mill or Triturator.

or for larger amounts, the shaking apparatus of Wagner (Fig. 49) has given excellent results.[1] For coating compositions and other

1. In factories where a slowly revolving pulley is available the same results may be obtained by fastening bottles to these, and allowing them to rotate until the contents are dissolved.

heavy solutions as applied to textiles in waterproofing processes and artificial leather manufacture, rapid results are obtained with the use of an arrangement on the principle of the J. H. Day Jar Mill, or triturator, especially if power is at hand (Fig. 50). It is designed to very finely powder small amounts of dry material, or to bring into solution thick viscous combinations. The apparatus consists of two porcelain jars in iron casing, and mounted on a frame arranged to revolve the jars. The grinding is done by means of porcelain balls inside the revolving cylinders, and is entirely free from the possibility of metallic contact. From ten to fifteen revolutions per minute is the usual speed of the jars.

Filtration of Pyroxylin Solutions. The filtration of small quantities of solution through paper in a funnel is both tedious and unsatisfactory. Tedious from the ease with which the filter paper becomes clogged and retards further clarification, and unsatisfactory because evaporation of the solvent during the filtration process changes the composition of the liquid portion from loss of the more volatile constituents. In a slow filtration by this method the fluid portion of the filtered and unfiltered liquid may vary greatly in composition. Small quantities, however, may be quickly and satisfactorily clarified by thoroughly mixing with asbestos fiber, magnesia, zinc oxide or carbonate or animal charcoal, and whirling in an ordinary urinary centrifuge. With an electric or water motor (Fig. 51) the operation is rapid and noiseless and requires no attention. The limit of liquid which can be operated upon at one time in this manner is about 60 cc. in each tube. The advantage of an apparatus of this nature lies in the fact that a selection of pyroxylin based upon solubility and fluidity may be made in a few minutes' time, or the rate of deposit and condition of the fluid from two pyroxylins can be approximated quite closely, the tests being strictly comparative. To obtain similar results in the older methods of settling would require several weeks. The insoluble matter if centrifuged without the addition of clarifying material, may be read off in percentage, from the centesimal

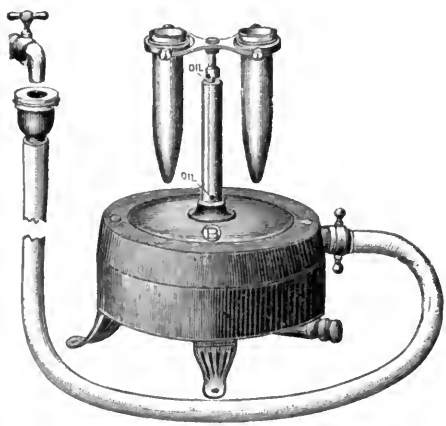

Fig. 51.—Urinary Centrifuge, Useful for Quickly Clarifying Pyroxylin Solutions.

graduations at the base of the urinary tubes. For larger quantities, the Wegelin and Hübner Filter Press (Fig. 52) made in iron and bronze, has this advantage, that the clearness of the filtrate and speed of filtration may be regulated within wide limits by the number and character of the filter papers or cloths interposed between the plates. In an experimental press, the loss in percentage of sample operated upon is comparatively high.

Dissolving. The pyroxylin is usually weighed out in the dry house, any "knots" or tightly twisted masses disintegrated by hand, and transported to the mixing house in practically air-tight containers, to avoid the absorption of moisture in transit. If, instead of drying,

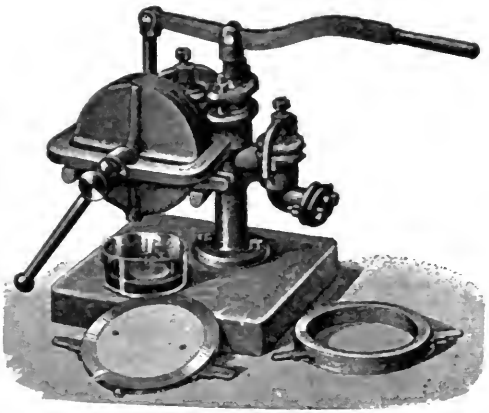

FIG. 52.—Wegelin & Hübner Experimental Filter Press.

FIG. 53.—Pump for Emptying Barrels and Drums of Solvent.

the moisture has been removed hydraulically by solvent displacement, each cake or "cheese" being broken up by hand, the percentage of dry pyroxylin being obtained by calculation as determined by previous experience. The liquids are either pumped to central elevated distributing tanks, where they fall by gravity and are drawn off as needed, or are pumped from drums by hand by means of a tin pump (Fig. 53). The liquids entering into a formula are run separately into a tank placed on an ordinary platform scales, the quantities being weighed and not measured. Best results are usually obtained by mixing the liquid ingredients in two portions, the first containing all the solvents with about one-third of the non-solvents, thus producing a fluid high in dissolving power. About 60% of this solution is placed in the tank, and the pyroxylin added in several portions, the contents of the tank being rotated continually. Considerable heat may be evolved in the solution of the pyroxylin,

and the speed of revolution of the inner paddles is regulated to conform with this rise in temperature. The 40% of non-solvent is finally added in small portions at a time, and agitation continued until a thoroughly homogeneous fluid is formed. By this division of liquids, less time and power are required to place a given weight of pyroxylin in proper solution, and a larger benzine content may be introduced

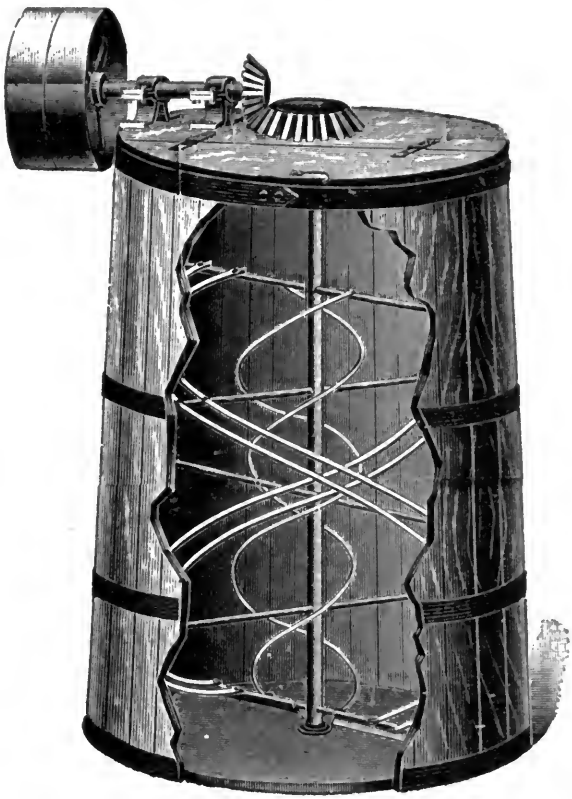

FIG. 54.—The Day Pyroxylin Mixer for Thin Solutions.

without throwing it out of solution, and with less liability to gelatinization of the finished preparation upon long standing.[1] After solution,

1. The volatile nature of the solvents make tight-fitting covers imperative and it is usual to provide a small "peep hole" arranged in the cover, so that progress of solution may be watched without raising the lid. This mixer (Fig. 54), constructed of ash or oak, is especially valuable in bringing quickly into solution mixtures low in pyroxylin (collodion, bronzing liquids). The outer flat iron bar spirals are so constructed as to cause an upward movement of the liquid, which is carried down again by the inner spirals, thus producing a constant agitation of the liquid in the tank. Usually these mixers are constructed in gangs of two or more (Fig. 55). It is a fact that wooden tanks in which acetone, amyl acetate and similar hygroscopic substances are stored, no matter how carefully kiln dried

a faucet, usually located in the bottom of the tank (Fig. 57), is opened, and the contents drop to the storage tanks beneath, of if for immediate shipment, a faucet in the side admits of running into drums or cans.

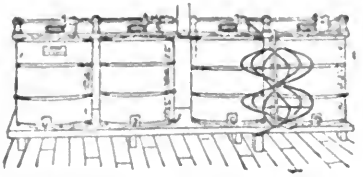

FIGS. 55, 56.—Pyroxylin Mixers in Groups of Two.

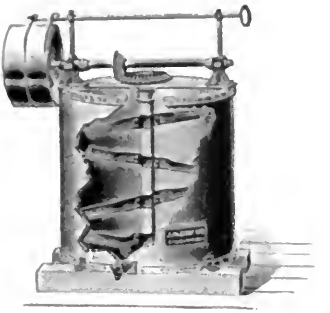

FIG. 57.—The Day Paragon Liquid Mixer.

For the heavier and more viscous combinations used as application to cloth and leather, a heavier mixer with faucets (Fig. 58) or sliding gates (Fig. 59) is required. These mixers are furnished with

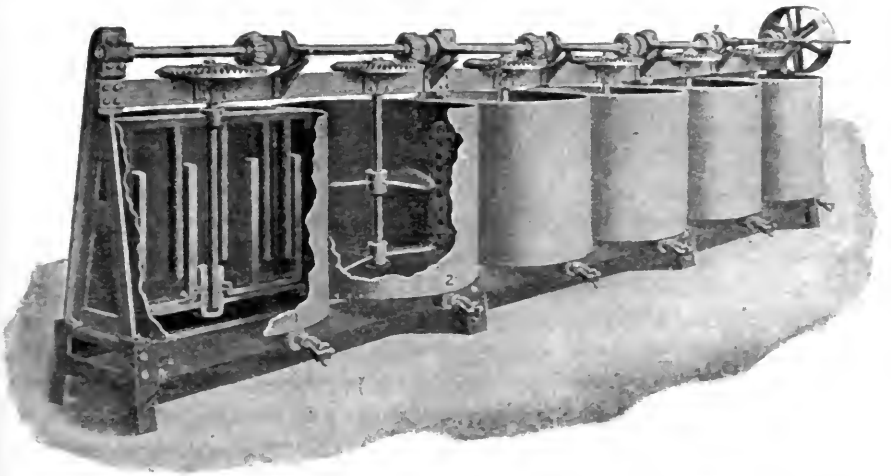

FIG. 58.—The Kent Mixer in Series for Heavy Solutions. (Kent Machine Works, Brooklyn, N. Y.)

propeller-like blades curved upwards for liquid material, or with vertical blades (one set stationary and the other revolving) for semi-

the wood may be, will still shrink and leak when left long in contact with these liquids. A paste of glue or gelatin or other material insoluble in amyl acetate and alcohol is used to prevent leaking.

paste goods. The combination of movable and stationary blade cuts up as well as agitates.[1] For the heaviest compositions, and containing 1 lb. to the gal. and upwards of pyroxylin, with or without

FIG. 59.—The Day Heavy Mixer with Gate.

the addition of boiled oils and pigments, which greatly decrease the fluidity, a so-called "dough" mixer, as illustrated in Fig. 60 is gen-

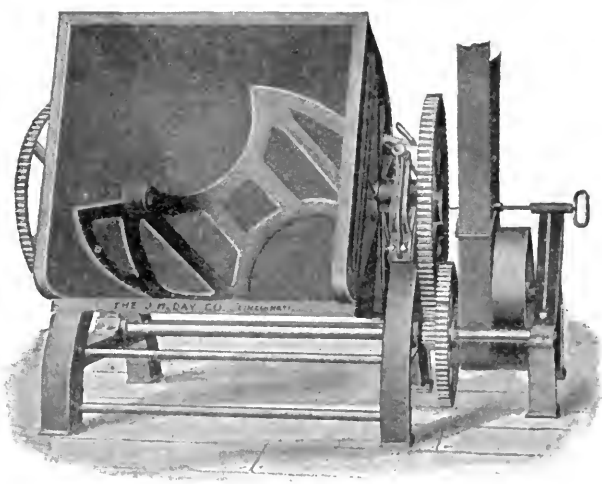

FIG. 60.—The J. H. Day Dough Mixer for Heavy Pyroxylin Solutions.

erally used. One which can be tilted is more useful, because the finished material requires to be removed with a trowel or spatula.

1. The tanks are made of sheet metal mounted on a structural-iron platform, and driven with a mechanism arranged independent of the tank, which allows the disconnection of any one tank without interference with the remaining ones.

Where resins are to be brought into solution, a preliminary grinding in a "cracking" mill (Figs. 61 and 62) lessens materially

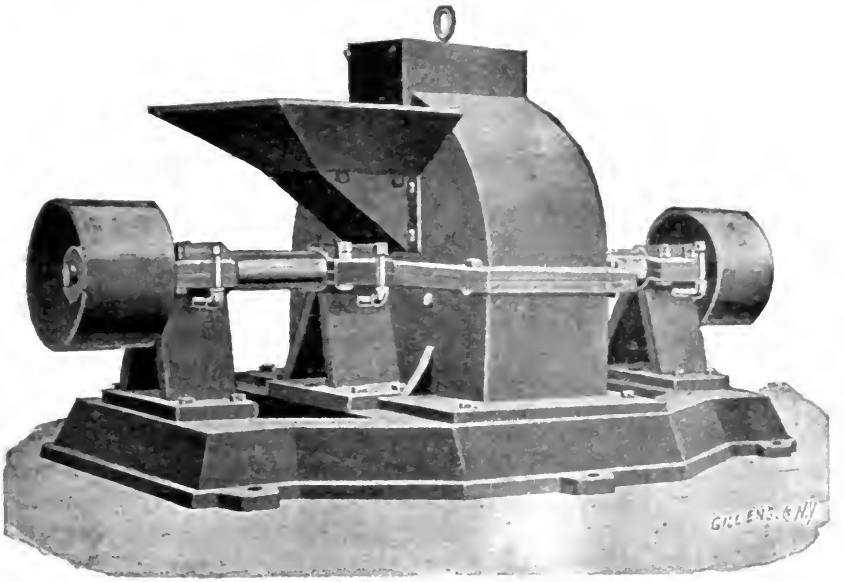

FIG. 61.—Kent Cracking Mill for Grinding Resins.

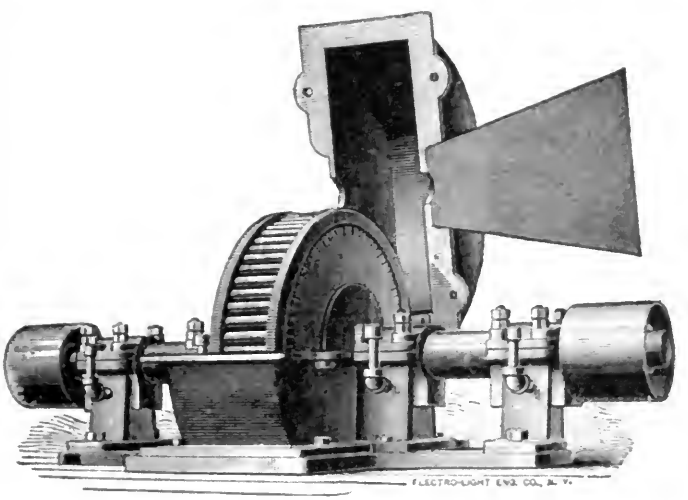

FIG. 62.—Kent Grinding Mill (Opened).

the time required for subsequent solution.[1] By adjusting the fineness

1. The pulverizing is accomplished by means of balanced steel cages, running at high speed in opposite directions. When the material is fed into the machine

of the powder, refractory resins, as the harder copals, amber, and shellac, may be made to dissolve in a fraction of the time where the particles are in a fine state of subdivision. On account of the free acid normally present in resins, it is often more advisable to dissolve them away from contact with copper or iron, as in containers of wood. In Fig. 63 is shown a barrel with eccentric revolving arrangement, which in capacity may reach to 800 gallons without inconvenience in manipulation. The coarsely ground resin is introduced into the barrel with the solvent, large porcelain or steel balls placed inside to facilitate disintegration and prevent the formation of a single mass, a cap or cover of 6 to 8 inches in diameter and operated by a bar or lever, closing the mixer. It is claimed that the eccentric motion effects an economy of 30–40% of time as compared with the

FIG. 63.—Day's Revolving Varnish and Shellac Cutter and Mixer.

FIG. 64.—Harris Paint Mill No. 3. (J. H. Day Co.).

plain revolving churn. With a mixer of 150 gal. capacity, a normal charge should not greatly exceed 100 gal. at a single mixing. This form is extensively used in the solution of waste scrap from the manufacture of celluloid collars and cuffs, and in the preparation of wood enamels. In those colored compositions containing pigments, the latter are first finely ground in order to obtain the requisite smoothness and uniformity in shade. The dry colors are mixed together and made into a stiff paste with a vegetable oil, usually castor, and then ground in an ordinary paint mill (Fig. 64), one containing a rubber and stirrers in the hopper being preferable (Fig. 65). It is contended on good authority that a single grinding of pigment is insufficient

through the hopper, the centrifugal action drives it out through the steel bars, which, going at the speed they do, and in opposite directions, pound the material to powder.

to properly develop the full homogeneity of color and depth of shade, and that therefore a double grinding is advisable. Fig. 66 represents an electrically driven tandem mill of the Kent type intended for this purpose. The wetted powder is placed in the upper mixer or feed pot, where it passes through a gate into the first grinding mill; from this automatically into the second, and finally into any convenient receptacle underneath.[1]

Where a heavy preparation is to be sold and not used upon the premises, economy in handling and loss of solvent from evaporation may be prevented by the use of an open-head barrel arrangement

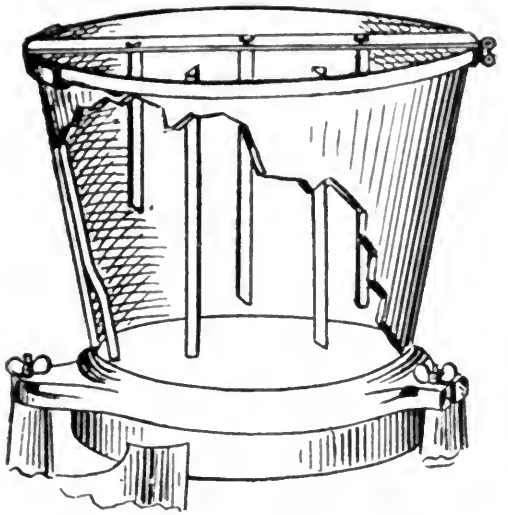

Fig. 65.—The Harris Improved Mill.

as indicated in Fig. 67, the material being mixed and shipped in the same container. The empty barrel is placed upon the scales, the ingredients successively weighed in, the cover bolted down and placed on a revolving arrangement similar to that indicated in Fig. 50, about six revolutions per minute being made. The contents of the barrel require no attention, and a series of barrels placed on the rolling frame and revolved during the night are ready for shipment the next morning without reopening. The wooden wheels upon which they revolve and which are not over 6 inches from the floor are covered with rubber glued on, this being the only thing coming in contact with the barrel during solution. Thirty gallons is usually the maximum amount placed in a 45 gal. barrel.

1. The mills are usually driven with a friction clutch, thus enabling them to be run independently or collectively at will.

Where resins, oils or pigments are to be incorporated with pyroxylin, the two are usually antagonistic, and special methods have to be observed in order to bring them into solution with the minimum amount of solvent. The pyroxylin is usually first brought into solution, after which the other ingredients are added spearately

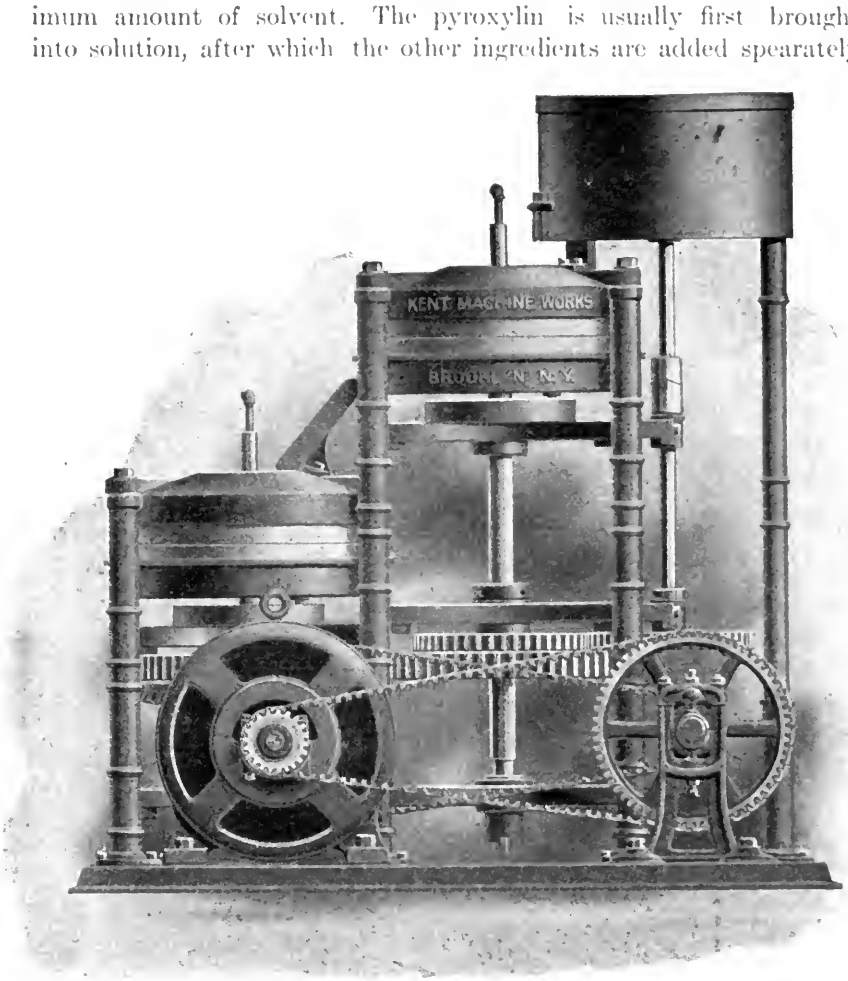

FIG. 66.—Kent Machine Co. Double Automatic Pigment Grinder.

and in small portions, in order to minimize danger of precipitation. Resins are usually dissolved in the fusel oil portion of the formula, this being afterwards added to the pyroxylin-containing portions. In general, vegetable and animal oils and oil-containing mixtures are most antangonistic to pyroxylin, but when added in small portions at a time to the latter high in solvent, liability to precipitation is materially decreased. Where the addition of color is made to a

definite shade, as in the duplication of artificial leather patterns, a small portion of the compound being manufactured is spread upon cloth during the addition of the pigment portion and dried, the sample being "matched" in this manner. Resin solutions are either clarified by standing or strained through cheesecloth or fine-mesh wire sieves before incorporation with the pyroxylin, especially if the completed composition is to be paper-filtered, the preliminary clarification lessening liability of clogging the filter press in the subsequent filtration.

Filtration. When first prepared, pyroxylin solutions usually contain too much insoluble matter to admit of use without clarification, an exception being opaque coating compositions. Where

FIG. 67.—Open Head Barrels for Heavy Pyroxylin Mixtures.

time and money will permit, storage in practically air-tight containers allows the material to subside, when the supernatant and clearer liquid may be withdrawn. In a great many instances this method is inadvisable, from the capital required to stock these solutions for several weeks while the solid matter is being deposited by gravity. In solutions containing a low solid matter, and especially bronzing liquids, filtration is seldom resorted to, the products being allowed to stand in tanks for several days and then withdrawn for shipment. The uses for which the mixtures are intended generally determine the completeness with which the insoluble portion must

be removed. For example, in biograph and continuous films intended for enlargement, filtration must be exceedingly thorough, and the specks noticed in pictures of this kind and so conspicuous when magnified, are due to insoluble particles either incompletely removed from the solution, or deposited as dust during the preparation of the films.[1]

Pyroxylin solutions are clarified either naturally by subsidence or artificially by filtration. Where sufficient capital is available, it is preferable to use the former method on account of the loss by evaporation which attends paper filtration and the material which is absorbed by the filter papers. However, it is impossible to produce as clear solution by this means; the smaller insoluble particles, which apparently are unaffected by gravitation, impart to the solution a smoky and hazy appearance. There is less labor expended in clarification by this method, while the mechanical loss in the filter press is entirely avoided. In addition to bronzing liquids, pharmacopeal collodions are usually clarified in this manner, the low boiling point and high volatility of the ether in the collodion making press filtration both dangerous and costly. The liquids are run into tall "varnish" tanks (Fig. 68), directly after manufacture. These tanks are of iron, heavily tinned, with wooden bottom, and draw offs at convenient heights. The faucets or gates [2] when placed at convenient heights in the tank allow decantation of the upper layer without disturbing the lower ones, which may still be turbid. To hasten the natural process of subsidence various expedients have been devised, as the addition of insoluble, neutral and inert materials, the oxides and carbonates of lead, magnesium and zinc, barium sulphate and other bases, which have been sprinkled over the top and then thoroughly stirred in. The inorganic deposit mixed with the insoluble pyroxylin is subsequently utilized in cheap cloth-coating compositions. Upon thorough agitation the settling of the inorganic base carries with it the majority of the suspended particles. Spraying the surface of the liquid with water in an atomizer has

1. The single "moving picture" is ¾ inch by 1 inch in size, and when this is magnified to 9×12 feet and thrown upon the screen, it has been enlarged 20736 times, this being the magnification of any insoluble speck present. Again, in artificial filament formation, the fluid is projected through nozzles of internal diameter less than the thickness of a normal human hair. It is therefore evident that pyroxylin solutions intended for these or similar uses must be clarified with painstaking care. The Lumière and other delicate filtration methods are described in Chapter XIII.

2. The Stebbins iron gate (Fig. 69) or a combination shut-off and gate (Fig. 70) prevents loss from leakage, while the tank covers are either closely fitting or are equipped with a water or oil seal to prevent evaporation from the top. Thus arranged, these tanks are practically air-tight.

materially assisted in some instances in coalescing the smaller particles into larger ones, and thus hastening their subsidence. Inducing convection currents in the liquid by means of change of exterior temperature and the passage of an electric current of low potentiality have also been suggested. Although the amount of insoluble matter (usually the higher nitrocelluloses) will vary with different nitrations, the amount of deposit in the same solution being increased in proportion to the proximity of precipitation of the latter due to the addition of non-solvent.

Solution and filtration may take place in the same receptacle by using a large barrel with manhole arrangement and pierced on the opposite side for a pipe for air connection. After the container has been rotated until complete solution results, cheesecloth, felt, moleskin, or fine wire may be placed over the opening, the cask inverted, and the contents allowed to run out by gravity or assisted by pressure introduced through the pipe, or adjusted for air suction beneath. Another method is to run the dissolved contents from the cask into a tin tank with false bottom, containing a wire netting reinforced with several layers of cheesecloth, through which the solution slowly percolates, and runs into a storage tank underneath. From the standpoint of efficiency as compared with gravity filtration, the use of a plate filter press (Fig. 71) offers many advantages. The machine consists of a number (up to 60) of perforated iron plates, between which are placed sheets of filter-paper, the number of units used and the

Fig. 68.—Tank for the Storage of Lacquers.

Fig. 69.—The Stebbin's Faucet for Volatile Liquids.

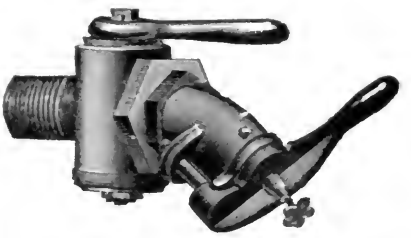

Fig. 70.—The Combination Shut-off Faucet and Gate. Reduces Liability of Leakage.

quality of filter-paper employed depending upon the result to be attained. The force of the pressure pump in forcing the liquid through the press, is very apt to rupture the wetted filters, and in order to

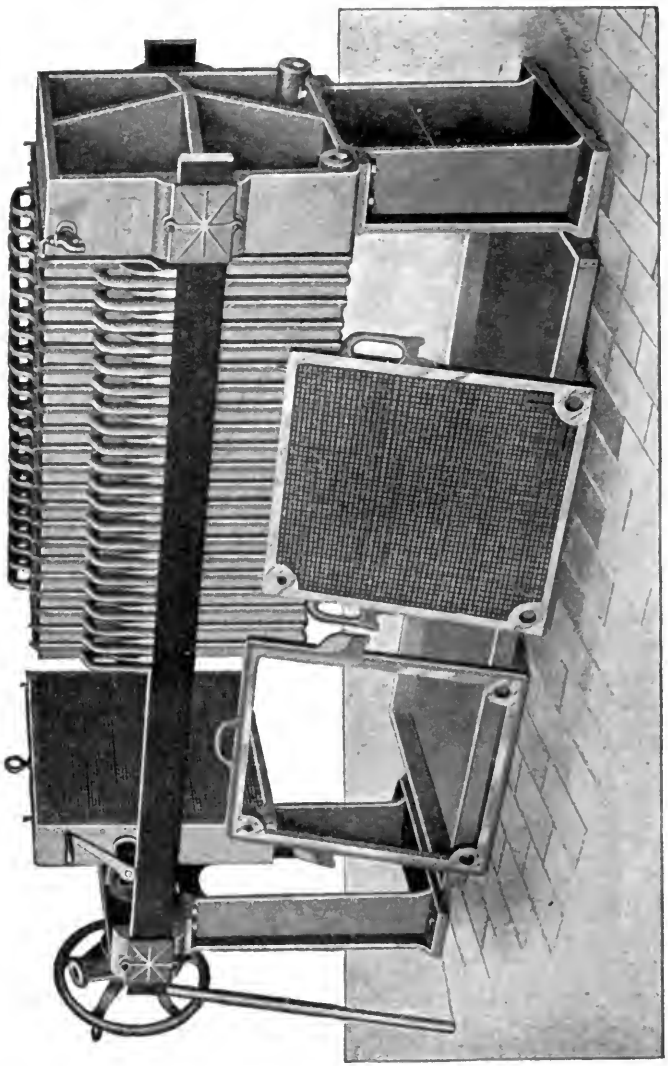

Fig. 71.—The T. Shriver Plate Filer Press. (Harrison, N. J.)

obviate this, heavy canvas cloth is placed between each filter block. From 25 to 300 gal. of solution may be filtered before renewing the filters. There is a loss of about 1.2% from evaporation and from what is mechanically held in the filters, and about 3 gal. of material is

forced through such a press before filtered liquid appears at the other side. The liquid is pumped in continuously at the speed of 25–50 gal. per hour, the speed of filtration being directly dependent upon the amount of solid matter in the solution. For fine lacquers for silver work and photographic films it is imperative that the liquid be previously thoroughly filtered, in some instances several re-filtrations being required. In appearance the filtered liquid should look as transparent as glycerin, and will thereafter keep indefinitely without throwing out additional deposit. The press may be dismantled and the filters renewed in a short time.

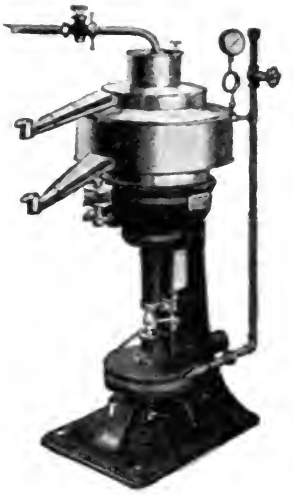

Fig. 72.—The De Laval Centrifugal Varnish Filter.

There has recently been introduced a filter press of the continuous type, designed on the principle of the De Laval cream separators. The steam turbine style for direct steam connection (Fig. 72) occupies a floor space of but 18×24 in. The accompanying illustration (Fig. 73) is a sectional view of that portion of the De Laval clarifier in which the clarifying and filtering are actually accomplished. This is known as the bowl, and consists of two separate compartments, which, since their duties are different, in reality perform the functions of two separate machines.

The first or lower compartment is the clarifying chamber—the upper the filtering chamber. The former consists of a cylinder filled with a series of conical-shaped, pressed steel disks, one above the other, about one-sixteenth of an inch apart, and held rigidly in position by a central feeding device called the "split-wing tubular shaft." The filtering chamber or upper compartment is also cylindrical in shape, but of less diameter than the clarifying chamber. Its side walls contain numerous perforations which are lined with filter material *H*. This may be paper, cloth or wool, and governed by the viscosity and freedom from sediment of the solution to be passed through. Within this chamber are placed three concentric cylinders dividing the chamber into four compartments, *G*, *F*, *E*, and *D*. All three cylinders contain numerous perforations and are lined with filter material *H*. The liquid first enters the bowl at the point *A*, through the feeding device in the center, and drops to the bottom of the clarify-

ing chamber, and is then forced upwards by the centrifugal force and out through the wings of the tubular shaft into the spaces between the disks, which act as so many independent bowls.

In this operation it is said from 90–95% of the coarser dirt and sediment is removed and retained in the sediment pockets *B* and *C*. After leaving the disks the liquid continues to be forced upward out of the clarifying chamber and into the compartment *D* of the filtering

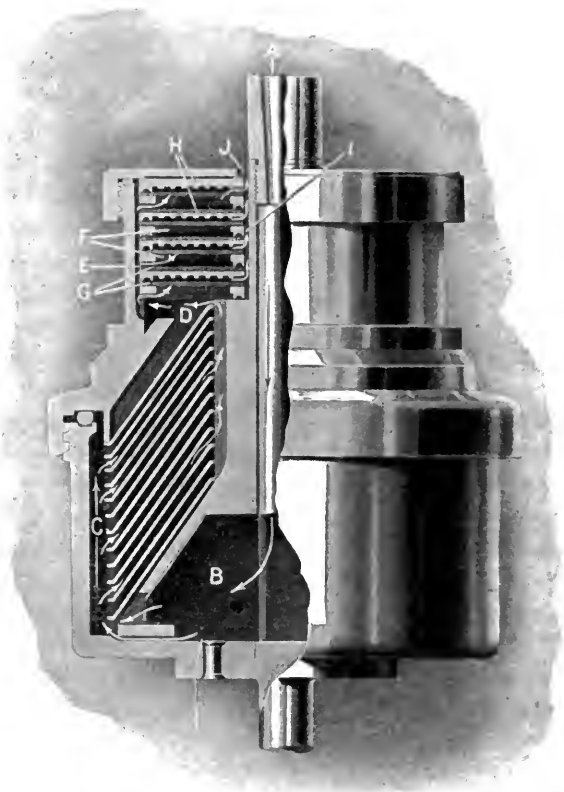

FIG. 73.—Sectional View of Filtering Chamber of the De Laval Centrifugal Filter.

chamber. Here the same centrifugal force drives the liquid through the walls of the three inner cylinders into compartments *E*, *F* and *G*, the filter material *H*, with which the cylinders are lined, catching and retaining the sediment not removed by the clarifying compartment.

Lastly the liquid is forced through the filter-material lining of the side wall of the filtering compartment itself, and then delivered to any convenient receptacle. This second operation, which consists

in forcing the liquid through the four independent linings or layers of filter material, is designed to remove any finer sediment which may have escaped the previous processes. If the solution is to be used as a lacquer, the general appearance of clearness when a filled large bottle is examined in a strong source of light is usually sufficient indication of suitability. Where the solution is intended for photographic films subjected to enlargement, imbedding media for objects to be studied microscopically, or for artificial filament formation,

FIG. 74.—Upright Glass-lined Steel Tank for Lacquer Storage. (Pfaudler Type.)

FIG. 75.—Glass-lined Steel Tank for the Storage of Cellulose Nitrate Solutions. (Pfaudler Co., Rochester, N. Y.)

visual examination is not sufficiently delicate. If, however, a small portion of the filtered pyroxylin be run on a cleaned glass plate, allowed to evaporate to dryness under a bell jar and then thrown on the screen by means of an enlargement camera, the relative size of the specks may be definitely determined. Or a drop of the solution may be run on a stage micrometer glass, allowed to evaporate to dryness and examined microscopically, when the size of the particles may be determined in terms of micromillimeters.

Storing. Solutions are either stored in tin tanks similar to the settling tanks previously described, or for the finer class of solutions and those paper or centrifugally filtered, enameled tanks similar to the glass enamel tanks of the Pfaudler System (Fig. 74). These tanks, which are constructed of steel and are glass- and enamel-lined, are

FIG. 76.—The Paneled Lacquer Shipment Can.

designed to store lacquers for an indefinite period without affecting their color or transparency. By means of the manhole they may be readily cleaned as required, and are fitted with faucets of various sizes to accommodate mixtures of different fluidities. For settling, the taller tanks (Fig. 75) are better adapted. The tops can be hermet-

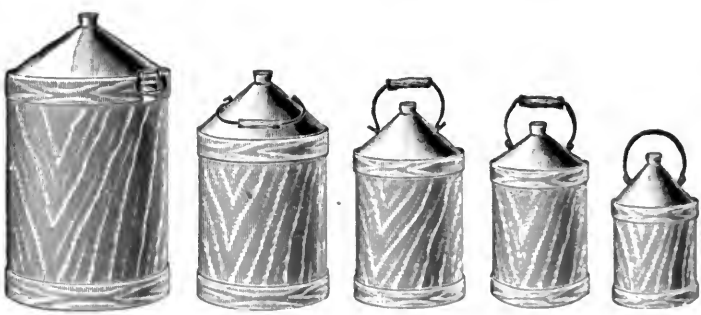

FIG. 77.—Evenden's Patent Jacket Can.

ically closed, and may be provided with but a tiny vent to relieve interior pressure, so that loss by evaporation and danger from the presence of benzine vapor is reduced to a minimum. In these tanks glass is the only material which comes in contact with the liquid.

Shipping. For small quantities of pyroxylin solutions, either

paneled varnish cans (Fig. 76) or jacket cans (Fig. 77) are used for shipment. Where the containers are small, and a number are to be filled, a device on the principle of the J. H. Day bottle filler is

Fig. 78.—Tin Cup to Cover Varnish Can Nozzle after Opening.

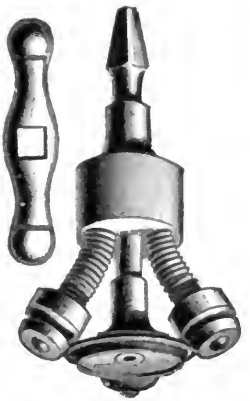

Fig. 79.—Varnish Can Sealer Used for Crimping Metal Caps.

time-saving and efficient. The machine is so arranged that it stops flowing when the containers are filled, and does not start again until a series of empty cans are placed under the nozzles. Various sizes may be filled at the same time, and an automatic cut-off with which the tank is equipped allows it to be kept full without overflowing. The jacket cans do not require boxing before transportation, and both kinds are closed with an air-tight seal (Fig. 78), consisting of a metal cap *A* and washer *B*. The caps are attached to the can by means of a hand crimping arrangement (Fig. 79), which being a patented article has always sold at a price far in excess of its manufacturing value. The cans are opened by cutting out the cap, after which a lacquered tin cup (Fig. 80) which accompanies each can, reduces loss by evaporation from the nozzle. The paneled and jacket cans are limited to 10 gal. in size. Above this, barrels or galvanized iron drums are used, great care being exercised in using new drums, that acidity from the soldering fluid is not present to give an acid reaction to the shipped lacquer.

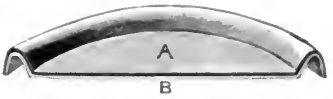

Fig. 80.—Varnish Can Cap or Seal.

Precautions Necessary. The very inflammable nature of the liquids and solids entering into this class of formulas calls for the application of every known device for the safeguarding of life and

protection of property. Replacement of belts and pulleys by rope drives, and these in turn by the chain and sprocket as a means of power transmission, has done much to lessen possibility of explosion from sparking due to frictional electricity. The wearing of rubbers, rubber-bottomed shoes, or leather soles with wooden pegs only; laying all floors of tongue-and-grooved wood; covering the floor with sheet lead united by soldering; the use of rubber-tired trucks and carrying vehicles, are some of the suggestions actually being carried out in American factories. Of the explosions which have occurred in pyroxylin-mixing houses in recent years, where the cause of the explosion has been definitely ascertained, in the majority of instances it has been traced to combustion of benzine vapor rendered explosive by admixture of air. An efficient system of forced draft ventilation, the fans being arranged to discharge the air from near the floor, remembering that the mixture of benzine vapor and air is heavier than the air itself, has materially contributed to lessen the dangers attendant upon this occupation. Electric lights surrounded by a protective gauze of fine wire, on the principle of the well-known Davy lamp used in coal mines, have been introduced in some factories. The gauze prevents any possible explosive mixture from becoming heated to the ignition point.[1]

1. The storing of inflammable liquids in receptacles containing an inert, non-oxidizing gas as carbon dioxide, is a well-known expedient for guarding against the ignition and explosion of such liquids. But in those cases in which the liquid is a solution, a difficulty has arisen in practice owing to the absorption of a portion of the solvent by the gas, when the latter is employed to force the liquid from the receptacle by pressure. This loss of solvent, especially in pyroxylin lacquers, may cause the cellulose nitrate to become deposited and precipitated. C. Martini (U.S.P. 962036, 1910; E.P. 19692, 1909; abst. J.S.C.I., 1910, **29**, 337) has designed an improvement for the storing of collodion, which he claims obviates the drawbacks above mentioned, and in which the gas, before admission to the receptacle is saturated with a liquid of the same composition as the fluid portion of the collodion. His apparatus is illustrated in a diagrammatic vertical section in Fig. 81, in which the inflammable solution is stored in a receptacle *a*, preferably located underground. The pipe *b* serves for filling the receptacle, the solution being withdrawn through the discharge pipe *c*. The inert gas is contained in the cylinder *i*, and is led into the liquid in the impregnating tank through the pipe *h*. It is thus passed through the liquid in order to become saturated. The impregnated gas then passes to the receptacle *a* through a pipe *d*, the ends of which are secured respectively to the cover *f*, of the tank *g*, and to the cover *e* of the receptacle *a*. For an excellent article on protection of nitrating and lacquer factories from lightning, see Sprengstoffe Waffen. und Munition, 1907, **2**, 254.

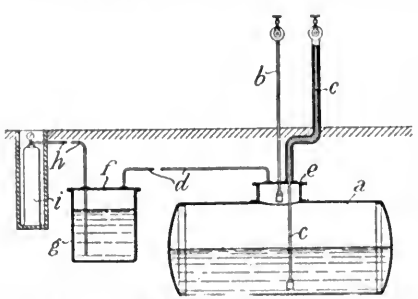

Fig. 81.—The Martini Process for Storing Inflammable Solutions.

CHAPTER X

PYROXYLIN LACQUERS, ENAMELS AND BRONZING FLUIDS

From the time of the discovery by Schönbein of that form of cellulose nitrate called guncotton, to 1851, when pyroxylin was first introduced into photography by Scott Archer, little if any progress had been made in the utilization of pyroxylin in solution, investigators having apparently confined their attention entirely to the development of its use in the solid form. However, the peculiar manner in which pyroxylin is deposited from its ether-alcohol solution, and the transparent and resplendent appearance of the resulting film, soon drew the attention of experimenters to the possibilities of pyroxylin in solution, as a means of producing improvements in the various industrial arts.

Alexander Parkes, an inventor of great mental capacity, was the first to file a patent for the use of a liquid cellulose nitrate composition as a protective coating, although subsequent developments showed that his ideas were more in accord with modern pyroxylin plastics than with lacquers.[1] The next year M. Pellen[2] was granted protection for a varnish composed of collodion and a small amount of castor oil as a covering for toys and balloons. The wide publicity given to the results of Parkes, due to his exhibiting samples of his product at the London Exposition, aroused considerable interest in the subject, and the succeeding few years were fruitful of many attempts to extend the uses of liquid preparations of celluloid and pyroxylin. The same year Parkes[3] devised a waterproofing lacquer prepared by dissolving "guncotton" in "a mixture of wood spirit or naphtha distilled from chloride of lime and sulphuric acid." Two years later John MacIntosh[4] suggested dissolving the pyroxylin in "equal parts wood spirit and coal naphtha" for use in the insulation of wire. A. Rollason, who subsequently became intimately identified with the early development of celluloid, devised a process[5] for pro-

1. E.P. 2359, 1855.
2. E.P. 2256, 1856.
3. E.P. 1125, 1856.
4. E.P. 1090, 1858.
5. E.P 1057, 1863; Barnwell and Rollason, E.P. 2249, 1860.

ducing colored lacquers by means of the solution of an aniline or vegetable dyestuff in the mixture of solvents and "azotic cotton," and in connection with S. Barnwell, a lacquer by combining pyroxylin and india-rubber, with or without the admixture of gums. This led to considerable experimentation on mixed solids and solvents, combinations of pyroxylin, india-rubber, gelatin and nitrogenous products, which experiments, in the main, were unsatisfactory.[1] Parkes appears to have recognized the value of proper solvent combinations as well as a satisfactory pyroxylin, for in 1865 he published several typical formulas containing in addition to pyroxylin, nitrobenzene, aniline and glacial acetic acid, but the combinations were so slow drying as practically to be devoid of commercial value. However, in extending our knowledge on the relative value of solvents, he opened up an entirely new field for experimentation and gave an impetus to this phase of lacquer development, which, as will be seen, was of far-reaching importance.

Collodion Lacquers. From the stimulus given to photography by cellulose nitrate, in which a product of low nitration called collodion was used exclusively, it is quite natural that the first cellulose nitrate solutions used industrially should be called "collodion lacquers," a term which, however, is hardly applicable at the present day, as the term collodion is intimately associated with the alcohol-ether solvent, at present never used as the solvent portion of lacquers. The composition of these lacquers was very simple, being essentially pyroxylin, or collodion as it was termed at that time, in the more volatile solvent ether, and diluted with the less volatile non-solvent ethyl alcohol. The high volatility and hygroscopic nature of the ether could not be effectually modified by the less expensive and more slowly evaporating alcohol, so that films upon drying would usually wrinkle, curl and tear away from the coated material, and often take on a permanent white color.[2] This phenomenon was thought of sufficient value to be protected by patents as late as 1904,[3] but the opacity is so variable that it would be practically impossible to duplicate the shade of color without having identical atmospheric conditions as to humidity.

It was gradually found that variations in the relative proportions of the two liquid constituents exercised a great difference on the char-

1. See Greening, E.P. 5344, 1889; 11666, 1894; U.S.P. 850266, 1907.

2. The reduction of temperature caused by the rapid evaporation of a solvent may be sufficient to induce the formation of the dew point in the atmosphere immediately surrounding the drying lacquer. This may cause a sufficient precipitation of moisture on the film to throw the pyroxylin out of solution, indicated by the film turning opaque and milky, from the white colloid form of the pyroxylin.

3. Berlin Aniline Company, E.P. 9962, 1904.

acter and strength of the dried film,[1] and with this observation as a basis, a search for more suitable solvents was commenced, to overcome the difficulties then experienced. P. Berard added a small amount of castor oil to the ether formula,[2] which decreased the speed of evaporation. These lacquers were used extensively in dentistry not only for varnishing artificial gums after being appropriately tinted,[3] but as a varnish or enamel for the bases of the artificial teeth [4] in which ether alone was the solvent generally used, the mixture being colored with alcoholic carmine.[5] For preserving metal work and structures, collodion [6] mixed with pigments was advocated, followed by a coating of sodium silicate and a top coat of a transparent spirit varnish.

In 1869 Spill [7] published his work, in which results are given with camphor oil and camphor in alcoholic solution as a ready solvent of pyroxylin, and thereby contributed greatly toward laying the basis for the commercial manufacture of xylonite and celluloid. It was found that by substituting camphor for the inflammable and quickly evaporating ether, a ready solvent was formed, and one which evaporated much slower, and moreover was considerably less expensive.

Celluloid Lacquers.[8] The possibilities which camphor opened in the manufacture of celluloid apparently caused a temporary suspension of interest in lacquers, which, when revived again in the early eighties, saw the gradual replacement of the term "collodion" by "celluloid" as applied to pyroxylin solutions, and the former designation of "camphor collodions" gave way to that of "celluloid lacquers." Strictly speaking, however, at the present day, the term "celluloid lacquer" is entirely a misnomer. With the exception of the two instances to be subsequently mentioned, camphor or its substitutes seldom if ever enters into the modern pyroxylin lacquer formulas. The celluloid lacquer of E. Rose,[9] known quite favorably in England, was a combination of copal with celluloid in an alcohol-ether menstruum. The majority of these celluloid lacquers were simple solutions of pyroxylin in alcohol, with 15–25% camphor added. It had been set-

1. It is a well-known fact that the same pyroxylin dissolved in amyl acetate will produce a more lustrous film than if the less expensive wood alcohol be used. A white odorless powder called Plastol has been introduced, designed to add brilliancy to a pyroxylin film, so that in combination with acetone or wood alcohol, results simulating amyl acetate or other more costly and higher boiling point solvents may be obtained.

2. E.P. 639, 1858; 1884, 1857.

3. J. Childs, E.P. 2295, 1859.

4. T. A. D. Forster, E.P. 3178, 1871.

5. W. Cunliffe, E.P. 2802, 1873.

6. A. Rollason, E.P. 2143, 1864, proposed a combination of collodion, either alone or with a gum or balsam, and to increase the luster of the coating, advocated the addition of a final coating of albumen, gelatin or honey, none of which is entirely soluble in alcohol or ether.

7. U.S.P. 97454, 1869; E.P. 3102, 1869.

8. See J.S.C.I., 1893, **12**, 278.

9. E.P. 5413, 1886.

tled without question that in adhesion, celluloid (containing camphor) was far better than collodion (containing no camphor), but there was found a general tendency of the lacquer to become rough and crystalline when applied to metal, as the camphor in the dried film evaporated. Occasionally small amounts of wood alcohol or acetone would be added, but the manipulation of solvents for individual requirements could not at this time be said to have developed into an art. The main improvements were slower evaporation, less liability to distortion of the film, greater adhesion due to the presence of the camphor, and an increased elasticity and (in general) luster. Considerable secrecy enveloped the composition of the more successful of these formulas, and absurd statements are to be found in the literature and formula works as to the ingredients recommended to obtain best results. Tar, creasote, beeswax, honey, starch, and other products of no apparent value are to be found in the technical literature. As with the collodions, the unsurmountable difficulty with the celluloid lacquers was their quick evaporation, which rendered their use by brushing very difficult, even in experienced hands, so that it was practically impossible to coat with satisfaction articles which could not be easily coated by dipping. These difficulties persisted with but minor improvements until the advent of the discovery of the solvent action of amyl acetate, which not only revolutionized the application of pyroxylin solutions, rendered obsolete collodion and celluloid lacquers, but practically initiated an entirely new field of work, and one which has developed into an industry of considerable magnitude and economic importance.

Modern or Amyl Acetate Lacquers. This radical change was made possible by John H. Stevens, who in 1882 for the Celluloid Company of New Jersey, took out a series of United States patents [1] for a number of direct and latent solvents of pyroxylin, among which was amyl acetate. This company soon afterward formed the Celluloid Varnish Company, as a subsidiary organization to take over the lacquer portion of the business, but beyond this organization and establishment of priority by patent protection, little appears to have been done. The use of this solvent was protected in England two years later,[2] and the year after the first modern pyroxylin lacquer formula was published.[3] Otto P. Amend introduced [4] for similar purposes the products of the chlorination of amyl alcohol and acetate, while Orr [5]

1. U.S.P. 269340, 269341, 269342, 269343, 269344, 269345.
2. W. V. Wilson and J. Story, E.P. 6051, 1884.
3. This formula comprised nitrocellulose 100 parts, with amyl alcohol and amyl acetate, each 400 parts.
4. U.S.P. 371021, 1887; 372100, 1887; Reissue, 10789, 1887. 5. E.P. 487, 1888.

employed a "chloracetate of chloramyl" prepared by the action of chlorine on fusel oil. In 1864 R. Schüpphaus found [1] that pure amyl alcohol is far less useful in the manufacture of celluloid than the commercial article, and this led him to the discovery of the value of *iso*propyl and *iso*butyl alcohols, and their preference over the higher homologue.[2]

During this time Richard Hale of Cranford, N. J., who was quite an expert in photography and therefore undoubtedly had had experience in collodion lacquers, was patiently investigating the solvents which had from time to time been made the subject of patent protection, and his experiments had met with so much success that in 1886, in conjunction with his son-in-law, Frederick Crane, organized the F. Crane Chemical Company, and commenced the manufacture of modern pyroxylin lacquers at Springfield, N. J.,[3] this being the first factory established in the United States for this purpose.[4] In the beginning it was proposed to try and keep secret the composition of the various lacquers produced, but this having been found impractical, and in view of pending litigation by the patentee of amyl acetate, Hale filed his application for a pyroxylin lacquer August 13, 1887.[5] That same day the late Walter D. Field, who at that time was chemist for the company, filed an application [6] for propyl and butyl acetates as solvents for pyroxylin, subsequently claiming that the mixed acetates obtained by the acetylation of fusel oil should be more properly regarded as propyl and butyl acetates with amyl acetate as a normal impurity,[7] than as consisting primarily of amyl acetate.[8] The outcome of the litigation had no appreciable effect on the development of the art, and the question of infringement was adjusted by a union of interests resulting in the formation of the Celluloid Zapon Company, a firm actively engaged in the pyroxylin lacquer manufacture at the present day.

Hale's Process. The United States patent granted to his wife

1. J.A.C.S., 1892, **14**, 46.
2. U.S.P. 381354, 1888.
3. This is often erroneously spoken of as Short Hills. The latter was the post-office, although the factory was located in Springfield, as stated. The first modern nitrocellulose lacquer made on a manufacturing scale was an amyl acetate-pyroxylin compound called "Krystalline," made by a company formed by Benj. Atha, Abraham Van Winkle and Henry Powells as prominent members, who in 1886 started a small factory in Newark, N. J., and this was the forerunner of the Celluloid Varnish Company, which later merged into the Celluloid Zapon Company. Some of the lacquers prepared by this firm have received the commercial name of "zapons," and the method of their application "zaponing." For description of zapon lacquers and zaponing see Apoth. Zeit., 1902, **17**, 809; Metall-Technik, 1908, **34**, 50; J. Goldschm., 1908, **29**, 33.
4. See also the historical portion of the artificial leather chapter.
5. Being U.S. Serial No. 246852.
6. U.S. Serial No. 246864.
7. U.S.P. 381354, 1888; E.P. 8253, 1887.
8. U.S.P. 269340, 1882.

as executrix [1] was held up until 1892.[2] Hale clearly defined his position and claim to originality when he says: "This invention has for its object more particularly to protect polished metal surfaces with pyroxylin films, by means of thin solutions of pyroxylin . . . which can be applied to the surface by dipping, brushing or the like, after the varnish or lacquer." Further along he enumerates the previous difficulties which experimenters had encountered, and states: "Heretofore thin solutions of pyroxylin have been made, but the application has not been practically successful, the film produced by means of these known solutions lacking one or more of those qualities characteristic to an industrial result. Thus, for example, the films so produced would be apt to be (*a*) uneven, i.e., of such variable thickness as to be objectionable, or (*b*) soft as compared with the coatings left by resin, or spirit varnishes of the better class, or (*c*) covered with small wrinkles, or (*d*) pervious to air or moisture, or (*e*) cloudy, opaque, unsubstantial, showing rainbow colors, or else not adherent in places over the whole surface, or lacking the requisite cohesion. Irrespective of the inferiority of the product, many of the solutions would be unsuited to industrial applications owing either to loss of solvent or excessive volatilization or to the long time consumed in drying." As an example of his idea of a typical and satisfactory formula, Hale submitted:

Amyl acetate	4 gal.
Benzine (petroleum naphtha)	4 "
Methyl alcohol	2 "
Pyroxylin	2.5 lb.

Acetone, he says, may be substituted for the methyl alcohol. The petroleum naphtha, which was of 62° Bé. gravity, was used to hasten the drying qualities of the lacquer, so that it would harden before entirely running off a vertical surface. The non-hygroscopic character of the benzine and its freedom from water, materially contributed to the success of his preparation when tested by practical application. The immiscibility of petroleum naphtha and wood alcohol, which can

1. Hale never lived to see the acceptation of his application. While experimenting at his Springfield laboratory in 1890, a kettle of fusel oil which was being heated over a free flame ignited, he receiving burns which proved fatal.

2. The E.P. was accepted April 16, 1887, No. 5586, and April 20, 1887, No. 5791; in France, 1887, No 184548; in Belgium, 1887, No. 78913; and in Austria Hungary, 1889, No. 17684. Crane and Hale further strengthened their position by E.P. 7376 and 7377, 1887; also 15771 and 15772, 1887, with amyl acetate as a solvent in conjunction with other known solvents, and especially with methyl and ethyl alcohol. In 1890 he added E.P. No. 12684, covering shellac and essential oils. In E.P. 7376, same date, benzine and other hydrocarbons are covered as additions to pyroxylin lacquers. Furthermore Field obtained E.P. 8253, 1887, for the use of propyl and butyl acetates.

be overcome by the addition of amyl alcohol or acetate, Hale made the subject of a divisional application.[1]

Field's Experiments. Field continued the work left unfinished by Hale, and prepared the first pyroxylin resin lacquers with fusel oil and amyl acetate as the principal solvents, commencing with shellac[2] but afterward extending his experiments to the other resins.[3] In this connection Field says: "By using a solution of shellac, with a solution of pyroxylin, in some non-hygroscopic medium, shellac may be successfully mixed to produce a varnish . . . having the adhesiveness of a shellac varnish with none of its defects, and possessing the free-flowing and contractile, transparent qualities of pyroxylin lacquer, a combination of the desirable qualities of both." The shellac was previously freed from wax by extraction with benzine.[4] Field's idea of a typical pyroxylin resin lacquer was:

Amyl acetate	50 gal.
Spirits of turpentine	25 "
Methyl alcohol	25 "
Pyroxylin and shellac, each	37.5 lb.

Spirits of turpentine was soon found to dry too slowly to meet trade requirements, and it was dropped as a constituent in pyroxylin resin lacquers, and is not so used at the present time.

Crane's Acetone Oil Lacquers. The point first developed by Hale, that a successful pyroxylin lacquer should contain liquids non-hygroscopic so that they may dry rapidly, was considerably extended by Crane, who in a systematic search of the known available solvents, both singly and compound, found acetone oil (which see). He selected[5] as the most suitable fraction of acetone oil for dissolving pyroxylin, that portion boiling between 100–140°, and submits the following as the most desirable formulas:

Volatile ketones (acetone oil)	50 gal.
Wood alcohol	50 "
Pyroxylin	200 lb.

1. U.S.P. 414543, 1891.
2. U.S.P. 422195, 1890; E.P. 15771, 1887. Tscheuschner dissolves pyroxylin in ether-alcohol containing boric acid.
3. U.S.P. 434330, 1890; the process of Germain (F.P. 360395, 1905) for the manufacture of artificial silk is characterized by the use of acetone oil as the nitrocellulose solvent.
4. U.S.P. 504064, 1893, the English patent recommended ethyl alcohol 5, amyl alcohol 3, amyl acetate 2 (all gal.), with pyroxylin 20 lb.
5. E.P. 6542, 6543 1892. Bolton's lacquer formula is paproxyl 30, camphor 10, alcohol 1000.

or:

Petroleum naphtha or benzol	20 gal.
Volatile ketones or acetone oil	20–50 gal.
Wood alcohol or acetone	30–60 "
Pyroxylin	200 lb.

The pyroxylin was dissolved first in the acetone oil, the other ingredients being added in any convenient order. The principal objection to this class of lacquers at that time was the exceedingly pronounced odor of the acetone oil, processes for its partial deodorization having not been perfected. It will be noted from the large amount of pyroxylin per gallon of solvent, that the formulas were intended primarily for photographic films.

Other Amyl Acetate Lacquer Processes. Field limited the application of his method to metallic surfaces, a point recognized and taken advantage of by Goldsmith [1] who extended the use of pyroxylin resin lacquers to wood and other absorbent material, and was the first to develop the idea of superimposing a resin lacquer upon a pyroxylin coat or conversely, in such a manner that the subsequent application would not cut into the prior one.[2] Ferner's ideal formula for a thin and a heavy lacquer consisted of the following:

	Heavy.	Thin.
Nitrocellulose	100 parts	100 parts
Amyl acetate	150 "	400 "
Amyl alcohol	150 "	400 "

obviously a very expensive combination. Valenta's typical lacquer is composed of 150 parts guncotton in 1,000 parts acetone, then adding 2,000 parts each amyl acetate and benzine, and clarifying by decantation. In 1893 [3] L. Paget proposed the use of a lacquer composed of amyl aceto-acetate 20, fusel oil and wood spirit each 5, and benzine 15, with pyroxylin. Two years later Reid and Earle,[4] as the result of their investigations on nitrated vegetable oils, published

1. U.S.P. 490195; the process of H. Lüttke, E.P. 24955, 1902, which consists in the addition of 10–15% nitroglycerol to pyroxylin lacquers, has never been used in the United States.

2. E.P. 491, 1885. For artificial leather cloth, the patentee obtained best results with the aforementioned formula, to which was added castor or linseed oil 150 parts, pigment 100, and essential oil (if any) 1 part. See also J.S.C.I., 1886, 5, 35.

3. The patentee claims to have discovered that by distilling mixtures of primary alcohols, not necessarily themselves pyroxylin solvents, with sulphuric acid and an organic acid, as acetic or salicylic, mixed esters are produced which are excellent pyroxylin solvents, and entirely different from a mechanical mixture of the acetate and salicylate. The most favorable proportions are stated to be 25 parts by weight of ethyl alcohol, 20–25 parts amyl alcohol, 25 parts sulphuric acid and 12.5 parts acetic acid distilled together.

4. E.P. 21995, 1895, W. F. Reid and E. J. V. Earle.

a process for the production of a flexible lacquer by combining nitrolinolein and nitroricinolein obtained by the nitration of linseed and castor oils respectively, together with pyroxylin and the usual solvents of the latter.

Classification of Pyroxylin Lacquers.[1] Arbitrarily, these solutions may be divided into the three following classes: (*a*) "Pyroxylin lacquers" proper, comprising those mixtures consisting entirely of pyroxylin for the total solid matter, but usually including bronzing liquids, which often contain a small amount of resin. (*b*) "Resin lacquers," improperly called "gum lacquers"[2] and containing no pyroxylin. They are solutions of resins and gum-resins in fusel oil and pryoxylin solvents, without linseed or other drying oil or turpentine, and hence are not varnishes, in the proper acceptation of that word. (*c*) "Pyroxylin-resin lacquers," a combination of the two classes above mentioned. Arranged more properly as to their methods of application, they fall naturally into the two subdivisions, dip and brush lacquers.

Dip Lacquers, as implied by the name, are solutions intended for applications where the article to be coated is immersed in the lacquer. With the exception of the so-called "enamels" to be discussed later, dip lacquers are colorless, purely pyroxylin solutions, containing at most 6 or 7 ounces of solid matter to the gallon, and intended for protective purposes only, and therefore are a practically invisible coating. The dip lacquers are seldom used for purely ornamental purposes. In a properly constructed formula, the total solids seldom exceeds 3%, so that when an article is dipped in a solution of this nature and the liquid portion evaporated, the solid residue adhering

1. Lacquers were first used in Oriental countries centuries ago. The Chinese and Japanese lacquers of olden times were dried resinous exudations from various species of trees, to which vegetable and mineral coloring matters had been added. The varnish was collected in the summer when the heat caused the exudations to flow most plentifully, was dried in the sun or partially so, and then incorporated with the coloring matters by hand, tung or Chinese wood oil apparently being added as a thickening agent and to facilitate the drying. For an exhaustive description of Oriental lacquers see John J. Quin, British Consular Report, 1882; also in a more condensed form; Sabin, Technology of Paint and Varnish, 1905, 146–179; Bull. Imp. Inst, 1910. 8, 32. For résumé of pyroxylin lacquers see Chapter XI, by Dr. E. D. Williams, in same work.

2. Gums are cellulose bodies completely soluble in cold and decomposed by hot water, or by continued boiling in water, as acacia and tragacanth. This term, properly speaking, should not be applied to bodies like copal and shellac, which are resins, insoluble in cold water and not coagulable by hot water. The gums proper are insoluble in alcohol, ether, acetone or fusel oil, while the resins are distinguished for their ready solubility in these liquids. Furthermore tolu, Peru, and benzoin, usually called gums, are in reality balsams, that name being applied to those bodies containing benzoic, cinnamic or homologous acid. They are insoluble, or nearly so in water, but readily dissolve in the resin solvents. They are semifluid or soft bodies.

is very small. The ideal dip lacquer is one which gives the greatest tenacity and covering power with the least residue deposited. On the most highly polished surface and closely grained metal, they deposit a uniformly smooth, transparent, lustrous and elastic film, possessed of great tenacity, and which in no way alters the appearance or impairs the luster of the surface to which it may be applied. This luster can be decreased or increased by a selection of the solvents entering into the liquid portion of the formula. The specific gravity of these solutions, which is always less than 1.00, is no criterion of their composition or value, while the "flow" (viscosity), is no index of the amount of contained pyroxylin.

Bronzing liquids, which are dip lacquers in composition, are made brush lacquers just before use by the addition of the bronze or other insoluble material. Where the piece to be coated has a peculiar configuration or is a portion of a stationary object, dip lacquers may be applied by brushing, but such instances are comparatively few.

Brush Lacquers are intended primarily for adornment, in contradistinction to the dip lacquers designed solely for protection. Containing from 1–4 lb. per gallon of solid matter, either resins alone or in combination with pyroxylin, it is evident that body and covering power are the essential requisites. The use of resins make this increase in solids possible without a corresponding increase in the viscosity of the solution,[1] thus admitting of the application of a much heavier coating without a change in fluidity and flowing qualities of the preparation. In this respect they enter into direct competition with linseed oil-turpentine varnishes, over which they are superior in quickness of drying and resplendent luster of the coating. It is quite evident that to attempt to fill the grain of the wood and place a satisfactory lacquer on a floor would require an indefinite number of coats of a dip lacquer on account of the great evaporation and small amount of total solids, a gallon of which would deposit a residue of but 4–5 ounces.

A classification based upon the materials to which the lacquers are designed to be applied, as wood enamels or brass lacquers, would be more or less misleading, on account of the diversity of application of the same solution, and the applicability for coating the same material with solutions of widely varying composition. While it is true that certain formulas and methods of combination find favor as coatings

1. For instance, 2 lb. shellac will not produce a more viscous or slow-flowing solution than 6 oz. pyroxylin, both dissolved in the same menstruum (say wood alcohol), while the former will contain over five times the total solids upon evaporation, and, therefore, five times the covering power when applied to a given surface.

for specified kinds of materials, yet these generalizations are not sufficiently broad or numerous to admit of profitable classification.

The Inflammability of Lacquers. With the exception of carbon tetrachloride and the halogen-substituted ethanes, none of which are used to any considerable extent at present, the liquid ingredients in lacquers are all inflammable. Pyroxylin in solution is also inflammable but not combustible. Therefore the modern lacquers, both dip and brush, will burn readily. Various processes have been devised in order to decrease this inflammability. The most interesting of these attempts is perhaps that of D. Bachrach,[1] who proposes to add to the usual constituents non-aqueous methyl, ethyl and amyl silicates, and similar silicic esters. However, as a free acid is required to be present in order to prevent decomposition of the silicate, it is obvious that the application must be extremely limited in lacquers. A. Nieske[2] suggests a salt of molybdenum, preferably sodium molybdate. Sodium metavanadate, paratungstate, and metantimonate have also been suggested, but no constituent at present is being added to lacquers by the manufacturers to reduce the inflammability.

In adjusting formulas for specific purposes it must continually be borne in mind that in both dip and brush lacquers the ratio of solvent and non-solvent must not at any stage of the evaporative process reach below the precipitating point of the pyroxylin or resin contained therein, or deficiency in adhesion will result, due to partial precipitation of the solids, whether that precipitation be observable or not. The pyroxylin may be thrown out of solution in a gelatinous condition, observable by the film becoming opalescent and granular, or a slight turbid appearance from precipitation of the resins. In the majority of lacquer formulas, commercial competition has become so keen as to compel manufacturers to introduce the maximum amount of the much cheaper non-solvent benzine, and nearly to the point of precipitation of the pyroxylin.[3] If the non-solvent portion has the lesser volatility so that the increment of non-solvent is continually increasing during the evaporation of the lacquer to dryness, any serious disturbance resulting in a preponderance of non-solvent will result in precipitation which may or may not be visible to the naked eye, but which becomes readily evident by decreasing strength of the dried film. In properly balanced formulas the ratio between solvent

1. U.S.P. 794581, 1905. See also process of G. Klose, U.S.P. 858660, 1907.
2. E.P. 22085, 1899; B. Buchstab, D.R.P. 216307, 1909; F.P. 407862, 1909, proposes to treat the nitrocellulose with air, oxygen or ozone to render it more difficultly combustible, and then dissolve to produce lacquers.
3. D. McCaine, U.S.P. 286212, 1883, obtained patent protection for the use of benzine on the claim that it tended to free the solution from air bubbles and add to its homogeneity.

and precipitant is so adjusted that the equilibrium is not disturbed, and the liquid of slowest evaporative power in every instance is a solvent of the solids. Then any incompatibility during the evaporation is remedied before the film has assumed the solid state, and its continuity or strength is not affected.

Bronzing Liquids.[1] That class of pyroxylin lacquers used as a medium for the application of aluminum and bronze powders is variously known as Bronzine, Aurum, Argentine, Silverine, Lustrogen, and Japanese, Chinese and Oriental Gold Paint. From an extensive use as a covering material in the picture-frame industry it is often spoken of as "gilding medium." On account of the presence of amyl acetate as the most conspicuously smelling of the solvents, and which has an odor somewhat resembling bananas, they have come to be commonly known as "banana liquids" or "banana oil." The modern acceptation of the term was apparently first defined in the process of C. M. Jacob, who in 1878[2] devised a mixture where pyroxylin in methyl ether and ethyl alcohol (collodion) is mixed with the bronze, the same "being suitable for gilding or silvering picture or other frames." The claim of A. O. and W. S. Gill[3] is very similar, only these inventors specified the distinct formula: 3% collodion, 75–80%, with 20–25% bronze powder.[4]

As a class, these liquids contain the least amount of pyroxylin in solution of lacquers offered for sale, usually averaging $2\frac{3}{4}$ and seldom exceeding 3 oz. per gal.[5] These are the only entirely pyroxylin lacquers used without dilution or thinning, and are colorless, neutral liquids, of consistency of raw rape oil[6] and nearly always opales-

1. Meister, Lucius & Brüning (D.R.P. 180680, 1904) have devised a process for obtaining special bronzing effects which consists in employing, according to the usual method of fixing bronzing and color lakes, azo dyestuffs which show, in slightly soluble form, metallic luster, such as *p*-nitraniline-*o*-benzylsulphonic acid (diazo) + β-naphthol (D.R.P. 150366, cf. Chem. Centr., 1904, **1**, 1307); benzidine (tetrazo) + 2 mol. β-naphtholdisulphonic acid 2:3:6; *p*-nitraniline (diazo) + β-hydroxynaphthoic acid (m. pt. 216°); *p*-nitraniline-*o*-carboxylic acid (diazo) + β-hydroxynaphthoic acid (m. pt. 216°); *p*-nitraniline-*o*-sulphonic acid (diazo) + β-naphthol, reduced. The metallic luster and the color appear as the light is reflected at different angles.

2. E.P. 2484, 1878. 3. E.P. 22610, 1891.

4. This was followed the next year by the process of W. E. and M. E. Williams and C. May, E.P. 4169, 1892, in which a claim for amyl acetate as solvent was made. The application of W. Cutters for a similar preparation, E.P. 7688, 1892, was refused.

5. Where the proportion of pyroxylin or other solid is stated in a formula, or a formula is given entire, it is to be understood unless otherwise indicated, that the ingredients mentioned are avoirdupois ounces by weight, and the liquids by volume per U. S. gal. While this arrangement may not be as scientific as reduction to the metric system, it is the method used exclusively in lacquer-manufacturing processes in the United States at the present time.

6. Tested with a Boverton Redwood viscosimeter, the viscosity of these bronzing liquids will vary from 500–550 seconds, whereas rape oil under same conditions

cent.[1] Formerly the pyroxylin was depended upon entirely for adhesiveness, but recently resins in amounts from 0.5–1.5 oz. per gal. have been added, in order to partially replace the more expensive nitrated cotton. Either mastic, which is readily soluble in amyl acetate,[2] or the softer copals as Kauri or Manilla which dissolve without difficulty in refined fusel oil, are used. The latter resin is much the more difficult to manipulate, owing to the fact that after having first been dissolved in the fusel oil, filtered and then incorporated with the pyroxylin, a well-marked tendency to precipitate in a finely divided condition develops, giving to the finished preparation a milky appearance not easily removed. Balsam of fir[3] or Venice turpentine[4] has been used for the same purpose, and Patat has secured a patent[5] for a bronzing liquid containing sandarac as the resin. A patent has also been granted him for a bronzing liquid composed of 5% celluloid, 45% amyl acetate and 50% methylated spirit to which 5% castor oil has been added.[6]

of temperature and in the same instrument requires 535 seconds, and water 25.5 seconds to pass through the orifice.

1. Because seldom, if ever, filtered. Immediately after manufacture the solutions are run into tin- or glass-lined settling tanks, and there allowed to remain at rest for one or two weeks or until required, to enable the heavier particles and insoluble material to subside. The settlings or "bottoms" are utilized in the manufacture of waterproofing mixtures and artificial leather-coating compositions, where the opalescence is masked by the addition of dyes or pigments.

2. Occasionally mastic is found, which instead of being the usual transparent yellow tears, is translucent, minutely granular, due to innumerable fine cracks and striations, and which refuses to dissolve completely in amyl acetate, in which fluid it normally is readily and completely soluble.

3. Sometimes called Canada balsam, an oleoresinous and straw-colored, viscous exudation from the Canadian pine, which soon hardens on exposure to the air. It is readily soluble in benzine, benzene, amyl alcohol, absolute methyl alcohol and acetone, and upon evaporation of the solvent, a transparent film of high refraction is left. The crude oleoresin contains sticks, pieces of bark and other extraneous impurities usually removed by filtration through paper or chamois assisted by heat. Its density is said to average 0.998 at 15°. In combination with pyroxylin, Canada balsam has been recommended by T. M. Minnis (E.P. 3033, 1903) as a coating for ground-glass surfaces to form transparent letters or signs. Such a solution has been proposed instead of pure balsam as a mounting medium for microscopical specimens in biological and histological work, the claim being made that the transparency is not decreased, while the strength of the dried film is greatly augmented.

4. Another oleoresin, known as Briancon turpentine, a bright or greenish-yellow liquid, usually nebulous (cloudy) from moisture, but bright and clear when freed from water. Unlike other turpentine, it does not separate into two layers upon standing. This turpentine is readily soluble in amyl alcohol and acetate, acetone and wood alcohol, melts at 130°, and has a specific gravity of 0.856. The most frequent adulterant is ordinary turpentine, from which it may be recognized by gently heating to volatilize the volatile oil, and then moistening the residue with alcohol. If this residue has a crystalline appearance, common turpentine is present. It is often used in small amounts as an ingredient in various pyroxylin-containing formula, the popular belief being that its extreme adhesiveness aids materially in the strength imparted by the pyroxylin.

5. F.P. 361394, 1906.

6. 5% (the amount of celluloid stated as present) is equivalent to 6.4 oz. per

These liquids are applied by mixing a small amount of the bronzing medium with the bronze to a thin consistency, and applying by means of a fine camel's hair brush. On account of the high volatility of the solvents, it is discreet to mix but small amounts at a time, and just before use. In respect to evaporation there is great variation, dependent upon the relative proportion of slower evaporating liquids (amyl acetate and fusel oil) as compared with those of greater volatility (wood alcohol, acetone).[1] Occasionally these preparations are offered for sale ready mixed, but when the lacquer is left in contact with the bronze for any considerable length of time, especially if the bronze be aluminum, gelatinization takes place, and the liquid contents partially or wholly solidify, this gelatinized mixture being insoluble in all known pyroxylin solvents. The preparation, therefore, has to be discarded.[2] Copper bronzes are less liable to induce gelatinization, but prolonged contact with the bronzing liquid diminishes its luster to a noticeable extent, and causes an appreciable amount to pass into solution, imparting to the liquid a pale-green color, and an acid reaction which is sufficiently marked to be estimated by titration.

In the ordinary method of mixing and use, small particles of the bronze may be applied which are not entirely enveloped by the protecting lacquer.[3] The brilliance may, therefore, be greatly prolonged by covering the gilded work with a second coat of the clear liquid. This, of course, does not apply to aluminum, which is unaffected by the hydrogen sulphide in the air.

gal., and inasmuch as the viscosity of commercial celluloid is about three times that of the pyroxylins used in lacquers it follows that in fluidity this mixture would be equivalent to at least a pound solution, a practically impossible working mixture. If diluted to a consistency sufficiently thin to admit of successful working, there would be present a too small amount of pyroxylin to give sufficient adhesion. The object of the castor oil is not apparent, unless the preparation was intended as an application to a flexible backing as paper or cloth.

1. Usually 50–60% combined solvents are present, the balance consisting of benzine and benzene. The proportion of the more expensive and higher boiling-point solvent (amyl acetate) required, depends upon the nature of the other solvents employed, and seldom falls below 35%. The present tendency of the manufacturers is to introduce the maximum (53–57%) benzine, in order to reduce the cost of production. Where a resin is added in conjunction with the pyroxylin, mastic is generally used, the reason being that although comparatively an expensive resin, it will admit of the addition of a larger percentage of benzine without precipitation. The advantage of benzine 62° Bé. over 71° Bé. in this instance is its slower volatility, and hence less speedy evaporation of the combined liquid and bronze during use.

2. The solution is generally utilized in cheap colored lacquers. Various explanations have been offered to account for this peculiar gelatinization, one being that the aluminum induces galvanic action, but such action must be sufficiently passive to have no effect upon the metal, for aluminum cannot be detected analytically in a filtered gelatinized solution.

3. The action of the hydrogen sulphide normally present in minute amounts in the air acts upon the exposed copper, and darkens it by the formation of black copper sulphide.

Preparation of Gilded Lace. A patent has recently been issued to Daly [1] for the use of bronzing liquids in the manufacture of lace gilded with the precious metals. The lace is first coated with a "collodion" and while still in the moist state, bronze is sprinkled over the surface, or the two processes are combined by a previous mixture of the collodion and bronze. The excess of liquid is removed by a blower, the meshes of the lace being left open, while the threads become stiffened from the coating. Another method is to stretch the lace on a frame, and brush over with a solution of bronze and shellac. Silver sulphide is then precipitated on this framework by treating successively with an alcoholic silver nitrate solution and then with a soluble sulphide. The lace prepared by either of the above methods is then stretched on a wire cage, a coil of copper wrapped around, and the whole immersed in an electroplating bath. A layer of metal, i.e., copper, is deposited upon it. After this has been rendered compact by brushing, or rolling, the lace is again immersed in the bath and covered with a deposit of gold, silver or other metal. It is said that gold is to be used where it is desired to retain the flexibility of the lace, as other metals impart stiffness to it.

Imitation Mother-of-Pearl Films. The process of Hahn [2] for the production of these films consists in preparing a solution of nitrocellulose in ether-alcohol (1 part nitrocellulose, 78 parts 90% alcohol, 21 parts ether) to which from 5 to 10 parts soluble glass (sodium silicate) is added. The water present in the silicate is insufficient, it is claimed, to cause precipitation. Upon spreading the solution upon wood or paper, and allowing to evaporate slowly and at atmospheric temperature, the silicate partially cracks into a multitude of fine fissures nearly invisible, and this imparts a sheen and luster caused by the silicate particles splitting up the light into the primary colors, the rainbow effect quite simulating the nacreous appearance of the natural material. The optical effect may be varied considerably by substituting a potash for a soda silicate, and by varying the concentration of the nitrocellulose and the speed of evaporation. It is said that the introduction of 25% carbon bisulphide or benzine produces a marked difference in the brilliancy and arrangement of the colors developed in the mother-of-pearl-like surface. Himmel [3] takes a polished or lacquered surface of some pliable material such as leather, distributes various-colored bronze powders over the surface, after which the surface is pressed with a heated die with intaglio design.

1. E.P. 5348, 1902.
2. E.P. 13139, 1894; abst. J.S.C.I., 1894, **13**, 1072.
3. E.P. 18413, 1891.

The bronze may be distributed through a stencil plate or differently colored bronzes may be blown on by means of atomizers. Very finely powdered mica added to the bronzes is said to heighten the natural effect. The Tiller mica lacquer [1] is prepared by mixing finely powdered mica (20–30 parts) with a 4% cellulose nitrate. By dissolving various dyestuffs in the lacquer a multitude of curious and permanent effects may be produced. With the process of M. Bauché [2] fish scales are carefully cleansed and dried, the smaller scales of minnows and sunfish being considered preferable. A suitable cloth or leather backing is saturated with a pyroxylin lacquer, over the moist surface of which is dusted the iridescent scales. Beautiful effects are said to be produced by substituting for the fish scales, the scales forming the "dust" on the wings of butterflies, moths and other lepidopterous insects, as well as the ground wings of certain brilliant-hued beetles, and similar coleopterous insects. G. Keil and K. Plischke [3] dissolve out the shining substance from fish scales with water, evaporate to dryness, and then stir it in a pyroxylin lacquer.

Imitation Gold Leaf. Quite recently [4] a process for producing imitation gold and silver leaf has been patented, which apparently is quite feasible. "Soluble cotton" (¼ lb) is dissolved in 1 gal. amyl acetate, and this combination mixed with 25% bronze. After very thorough mixing the preparation is poured over a liquid heavier than the bronzing solution as water, glycerol, or carbon tetrachloride, depending upon the weight of bronze. The amyl acetate evaporates and leaves a thin metallic film or leaf on the surface of the water. It is not stated in what manner the amyl acetate layer is placed on the water without causing precipitation of the pyroxylin, before the latter assumes the solid form. By substituting aluminum powder for the bronze, it is claimed, silver leaf can be produced with equal facility.

In the United States, this patent has passed through the experimental stage, and considerable quantities of this imitation gold leaf, or "Oriental Tissue" and "Japanese Leaf," as it is more often called, is prepared in the following manner: The formula stated above by

1. F.P. 381195, 1907; abst. J.S.C.I., 1908, **27**, 81; F. R. Tiller, O. L. Benzinger and R. A. Meyer.

2. E.P. 3880, 1887. In the hands of O. Parkert (Sprechsaal, 1910, **43**, 327), "perlmuttin," a product prepared from mica schist, is used for obtaining fish-scale effects on glass and pottery, the substance being applied with "collodion as the medium."

3. D.R.P. 215672, 1908.

4. H. R. Gregory, U.S.P. 826781, 1906; Kürtz (F.P. 398028, 1908) obtains a gold leaf compound by mixing together nitrocellulose 26.25 gm., gold bronze 20 gm., linseed oil 3 gm., amyl acetate 500 cc., benzene 450 cc., methyl alcohol 50 cc., spreading out into thin sheets and drying. For other similar processes see A. Huck and L. Fischer, E.P. 6246, 1901; 17311, 1902.

the patentee has been found unduly expensive and may be replaced by amyl acetate 45%, refined fusel oil 8%, and benzine 62° 47%, the pyroxylin and bronze being substantially as stated above. No readily water-soluble solvents or non-solvents must enter the formula on account of danger in rendering the film white, opaque and devoid of strength when the solution is floated on the surface of the water. A long vat, of wood, from 50–75 ft. in length and about 2 ft. wide is filled with water from 6–12 in. in depth. A hopper carrying the bronze and solvent mixture, and having a slit at the bottom which is adjustable, is filled with lacquer-bronze mixture, the diameter of the slit adjusted, and this hopper rolled over the surface of the water, but not touching, the sides of the vat acting as a track on which the hopper runs. By varying the diameter of the slit in the hopper and the speed of the movement over the surface of the water, the depth of the film may be varied within wide limits. That gold bronze found most applicable is known in the trade as Dutch gold or "blue elephant." There is thus deposited on the surface of the water a gilt film of some 50 ft. in length and of a width so that when trimmed it is 1 ft., and in this manner appears in commerce. The thickness is about the same as a sheet of ordinary writing paper. This imitation gold leaf is finding extensive use in the book-bindery trade in the place of real gold leaf for lettering titles.

Heat-Resisting Bronzing Liquids. In coating metal surfaces exposed to heat, i.e., registers, radiators, steam pipes, etc., a purely pyroxylin coating would decompose, disintegrate and soon become worthless, from "peeling" of the metallic coating. In order to prepare combinations which will withstand a moderate but continued heat, boiled linseed and other drying oils are added in the proportion of 3–5 oz. and the resin is increased. The commercial preparations known as "Pyrobronzine," "Randeo," "Frosted Silver Finish," and by other names, are said to be formulated on this principle, possessing great tenacity and heat-resisting properties, and except upon long standing do not gelatinize. This enables the preparation to be sold ready mixed, and thus insures that the proper proportion of bronze to liquid will be applied, a point of considerable importance when small amounts are mixed by hand and without weighing or measuring the entering materials. These preparations without exception are much slower in drying than pyroxylin bronzing liquids, due to the presence of the vegetable oil.[1] A typical form-

1. According to Livache ("Oils and Varnishes," 198) "Iridescent bronze varnishes, which are so much employed to produce iridescence on military ornaments, sprays, feathers, birds' wings, etc., are colored by fuchsine (magenta crystals). The iridescence is first produced by coating the object with a magenta-tinted var-

ula of the two classes of bronzing liquids described above, is substantially as follows: [1]

	I.	II.
Amyl acetate	40–50	35–45
Refined fusel oil	4–5	20–30
Wood alcohol, 97%	35–50	15–25
Benzine 62°	20–25	15–20
Benzine 71°	15–25	15–25
Boiled linseed oil	—	4–6
Pyroxylin	2.75	3.0
Mastic, or Canada balsam	1.5	—
Copal	—	4.0
Aluminum or bronze	—	10.0

"Kerosene-Soluble" Bronzing Liquids. In attempts to meet competition in price, there have quite recently appeared what might be called with propriety, "imitation" bronzing liquids, and which contain no pyroxylin. Perhaps the best known of these are the so-called kerosene-soluble mixtures. They apparently are nothing but a solution of ordinary rosin (colophony) in benzine, analysis of such a solution giving the figures: Rosin, 27%, benzine 62°, 73%. The cost of such a preparation would be less than a fourth of the bronzing liquids containing pyroxylin. The resin acids present in the rosin would restrict the use of such a preparation to aluminum, and then the adhesiveness would be very much inferior to a pyroxylin-containing solution. The use would be restricted to the most inexpensive work, where no wear from actual contact could take place, as in frescoes and coatings for moldings and similar interior work.

"Water-Soluble" Bronzing Liquids. The extreme limit of inexpensive products of this nature has apparently been reached with the appearance of preparations making claims to ready solubility in cold water. Examination showed the presence of 27.5% sodium silicate (water glass) dissolved in water. The free alkali normally present in the silicate would preclude the use of the various copper-

nish, and when it is well dried it is laid on filter paper placed over bleaching powder, diluted to a thin paste with water. Under the influence of the escaping chlorine, in a few hours the coloring matter is oxidized, thus producing the desired iridescence."

1. In this and all subsequent formulas given, it must be remembered that the variation in percentage of amyl acetate in the commercial ester, and the ratio of higher to lower acetates; the nature of the uncombined alcohols and the proportion of alcohols other than amyl in the rectified fusel oil used; the siccatives and extent of boiling of the linseed oil; the solubility and viscosity of the pyroxylin; and the grade of resin used, are all factors which have to be taken into consideration, and allowed for in the production of definite formulas for specific purposes. In general in all lacquer formulas the maximum of benzine is added because it is the cheapest water-free and non-hygroscopic liquid obtainable.

containing bronzes, and limit the use to aluminum alone. The aluminum and medium would be stirred together immediately before use. It is said to have considerable demand among manufacturers of toys for silvering, and in the manufacture of cheap picture frames, moldings and interior mural work.

Testing of Bronzing Liquids. In addition to clearness[1] and color, a general examination as to suitability is confined to testing the adherence of the liquid to a metallic or glassy surface when admixed with sufficient bronze to produce an opaque covering in thin layers. One part of bronze by weight is thoroughly incorporated with 2 parts liquid, and spread upon a smooth surface, usually a glass microscope slide. The speed of evaporation, appearance of the film, and tenacity of adhesion, together with a comparison of the brilliancy of the bronze before and after admixture with the liquid, are the points usually taken into consideration. A slight acidity will appreciably dull the appearance of the bronze. The color and viscosity of the fluid may be determined as described under lacquers, but in practice this is seldom, if ever done. A properly prepared liquid will not become cloudy when used in damp weather.

Manufacture of Aluminum and Bronzes. According to Stockmeir[2] powdered aluminum is produced by grinding the metal in a stamp mill or mortar, then sorting by air flotation or elutriation, and polishing by grinding with oil. The latter operation is preceded in the case of the finest "bronzes" by a grinding with acacia solution and washing with water. The temperature of ignition of ordinary aluminum bronze powder is 480–490°, that of the finest being 280°. Considerable danger from explosion results in the method of air flotation due to the presence of hydrogen, and in a lesser degree to the presence of sparks from frictional electricity. Copper and colored bronzes are prepared by passing the alloy through powerful hydraulic cylindrical presses, which makes the dimension perpendicular to the rolls any desired thickness, and this can be determined with great accuracy by adjusting the rolls. This rolling under powerful presses

1. Clearness of the original fluid is indicative of the completeness with which the solid matter has been removed. Opalescence produced during the drying of the film may be due to two causes: (1) The solvent may have evaporated more readily than the non-solvent, the latter predominating to a sufficient extent to precipitate the pyroxylin. Or, (2) excess of low-boiling and hygroscopic solvents which produce the "dew point" in the vicinity of the evaporating lacquer, and the moisture absorbed by the pyroxylin may be sufficient to throw it out of solution. If sufficient high-boiling solvent is present, this precipitation is only temporary, and the cloudy film will become transparent before hardening and remain so.

2. Zeit. ang. Chem. 1906, 19, 1665. For historical and technical sketch of the manufacture of bronze powders, but with no reference to Bessemer's work, see C. Coffignier, Rev. chim. ind., 18, 111.

is what gives the flake appearance to aluminum and bronze powders. The thin sheets are then cut into smaller pieces, either with knives or by trituration in large mortars, until the requisite fineness is obtained. This fineness is determined by printing on glazed paper and immediately brushing a sample of bronze on the moist surface, together with a sample of a bronze of satisfactory fineness. As the layer of ink is very thin, it must follow that the bronze of smallest individual particles will adhere more firmly. After drying a comparison is made by brushing the satisfactory and tested sample and determining which brushes off the more readily.

Pyroxylin Lacquers.[1] In the transparent solutions the only solid is cellulose nitrate, although pyroxylin solutions containing pigments are usually classed under this heading. A pyroxylin lacquer may be defined as a protective coating in which the adhesive is entirely pyroxylin, any pigment or dyestuff present being for ornamentation and decreasing the tenacity of the dried film. The cellulose nitrate is usually present within the limits of 5–6 oz. Accompanying each lacquer and intended to be mixed with it just before using is a "thinner" of same name. This liquid is of approximately the some composition as the corresponding lacquer, except it has no total solids. It is the fluid portion of the lacquer. The lacquers as sold are too heavy for the majority of uses, and require to be diluted with thinner in the proportion of 2 or 3 volumes of thinner to 2 of lacquer. The object in arranging the liquids in this manner is to give latitude to the user to employ solutions of viscosity suited to the particular work to which it is intended to be applied. The strength of pyroxylin in a lacquer ready for use is therefore about the same as in the bronzing liquids. The volatility of the liquid portion of the lacquer during use tends to increase the total solids and cause the solution to thicken gradually, and it would be impossible for the user to keep the solution continually to the body necessary to his individual requirements, if thinners of this nature were not at hand. This diluting medium is much less expensive than the lacquer due to the absence of pyroxylin, hence the consumer endeavors to use the maximum amount of thinner with a given quantity of lacquer. The limit of dilution is reached when (*a*) the film is so thin as to lack the desired strength, or (*b*) the thinner portions of the dried film become rainbow colored (iridesce). Inasmuch as these lacquers are never colorless, due principally to the yellowish tinge of the dissolved pyroxylin, the smaller amount of lacquer required to produce a given result or cover a given surface, decreases the lia-

1. Credit for preparing the first transparent silverware lacquer with collodion is given to H. Strolberger (Chem. News, June, 1869; Am. Jour. Pharm., 1869 41, 370.

bility of the coated metal from appearing yellowish, especially when viewed by reflected light. In highly polished and white metals, as nickel and silver, this becomes of considerable importance. Usually the lacquer is diluted until a piece of coated metal begins to iridesce, this being overcome by the addition of a small amount of unthinned lacquer, when it is ready for use. Some pyroxylin lacquer manufacturers introduce a very small amount of resin, usually shellac or copal, in quantities less than 0.5%, in order to further reduce the liability to iridescence and admit of a larger proportion of thinner being used. This increases the covering power by decreasing the thickness of film deposited. E. N. Todd has obtained a patent for the use of balsam of tolu[1] as an ingredient in pyroxylin lacquers, which produces a decided tendency to decrease liability to iridescence, and according to the patentee possesses the additional advantage of being a latent solvent of pyroxylin.

These lacquers are invariably clarified before use, sometimes by long standing, but more usually by paper filtration in a filter press. The finest are known as "water white," and made from nitrated tissue paper, it having been found that cotton will not give as colorless a solution after nitration as paper. Paper pyroxylin in solution seems to filter more readily and completely than nitrated cotton or wood, so that a paper pyroxylin in solution has a clearer, more resplendent appearance, not unlike chemically pure glycerol. It has also been observed that a paper pyroxylin lacquer is also less prone to become cloudy on standing than is a similar formula prepared from nitrated cotton. These "water white" lacquers, which are employed exclusively in coating silverware, are usually solutions high in amyl acetate and refined fusel oil, with the limit (around 55%) of benzine added to reduce the cost. The yearly increase in the cost of production of amyl alcohol and amyl acetate has compelled lacquer manufacturers to adhere very closely to this line of demarcation between solution of the pyroxylin on the one hand and its precipitation by the benzine on the other, the rôle of the pyroxylin non-solvent fusel oil apparently being passive. In a satisfactory lacquer the liquid constituents are so adjusted as to dry slowly in the air, so that distortion and wrinkling of the film does not occur. By the use of benzines of varying boiling points and therefore rates of evaporation, it has been possible to cheapen lacquers of this class by increasing the lower boiling point and less expensive solvents (wood alcohol and acetone) with a corresponding reduction in the amount of amyl acetate

1. U.S.P. 384005, 1888; E.P. 6870, 1887.

required. A typical formula for lacquer and corresponding thinner would be:[1]

	Lacquer.	Thinner.
Pyroxylin	5.5 oz.	—. oz.
Amyl acetate	45. "	40. "
Refined fusel oil	7. "	6. "
Wood alcohol 97%	24. "	35. "
Benzine 62°	32. "	20. "
Benzine 71°	20. "	27. "

They are often erroneously called "celluloid" lacquers and varnishes, but the presence of camphor or its substitutes in amounts as high as normally present in celluloid would preclude the use of the preparation as a lacquer, for upon drying the camphor would either crystallize out or be precipitated in an amorphous state, in either instance resulting in the formation of a lusterless and opaque film, and imparting a dull or granular appearance to the coated metal. Calcium chloride[2] has been added in small amounts as a constituent of those pyroxylin lacquers designed more particularly as coatings for wood in order to decrease the inflammability.

Method of Using Pyroxylin Lacquers. In 1887[3] Frederick Crane obtained a patent in England for a method of applying pryoxylin

1. It will be observed in comparing the proportions of liquids in the thinner and lacquer given, that in the thinner the lower boiling solvents are present in larger amounts than the lacquer, and the reverse is the case with the higher-boiling point solvents. This is due to the greater volatility of those solvents of lower boiling points, and hence as thinner is added from time to time, less fusel oil and amyl acetate will evaporate as compared with the other solvents, which fact is allowed for in combining the proportions as stated. On account of the (usually) unknown amount of ester in commercial acetates, and its wide variation, this and future formulas can only be regarded as approximate. H. Zwick has patented (D.R.P. 211520, 1907) the use of a series of lacquers, whereby the limit of water is added, the reason not being apparent. He adds water and fats or oils to solutions of nitrated cellulose in a mixture of solvents of different volatility and solvent power, or to solutions of mixtures of nitrocellulose with other colloids (resins, balsams), insoluble in water, in one solvent or a mixture of solvents, varnishes are produced, which possess such good covering power that satisfactory coatings are obtained by dipping articles in them. Suitable preparations are: (1) Collodion, 100; ether, 1000; 96% alcohol, 200; acetone, 200; linseed oil, 40; and water, 75 gm. (2) Collodion, 100; 96% alcohol, 900; ethyl acetate, 300; shellac, 25; castor oil, 40; and water, 75 gm. (3) Collodion, 100; ethyl acetate, 1000; sandarac resin, 30; and water, 75 gm. B. Buchstab (D.R.P. 216307, 1909) has devised a peculiar process in which nitrocellulose is dissolved in a suitable solvent (e.g., is used as collodion) and treated with air, oxygen, ozone, or gases containing oxygen until the solution is a brownish-yellow color. The thick liquid thus obtained is diluted to suitable consistency with methyl or ethyl alcohol. For preparing paint-oils, etc., the solution is mixed with suitable non-drying or semi-drying oils, and for preparing lacquers, with resins, glycerin, etc. The products may be rendered incombustible by adding lactic acid or a lactate, especially strontium lactate. In place of using nitrocellulose for the process, materials containing nitrocellulose, such as celluloid, may be employed.

2. L. L. Béthisy, F.P. 340622, 347303, 1904.

3. E.P. 4954, 1887.

lacquers on a commercial scale, which with unimportant modifications is the method in use at the present time. A room or chamber *a*, of suitable material (Figs. 82 and 83), either stationary or placed on wheels for moving about, is provided at one end with a tank *b* containing the

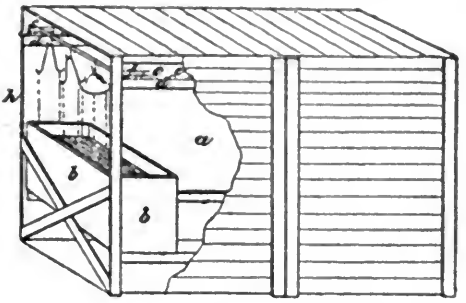

Fig. 82.—Crane's Method for Lacquering With Pyroxylin.

coating compound employed, and a charging door *h*, and at the other end with a discharging door. In the example shown, the vessel is inside the charging door in order to decrease loss by evaporation. It may be placed outside, however, in which case it should be well covered when not in use. Side frames *d*, *d*, provided with friction rollers

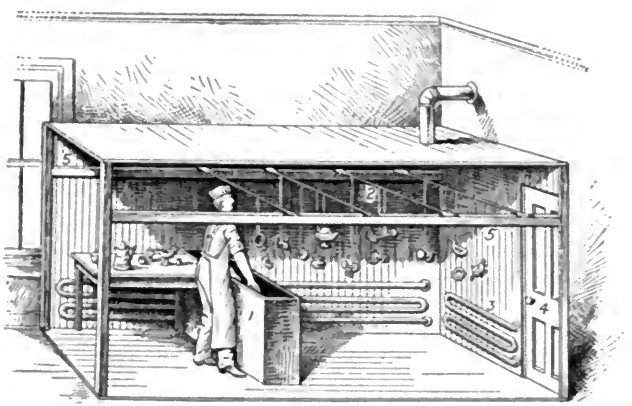

Fig. 83.—Lacquering Small Objects with Pyroxylin. 1. Tin lined, wooden case dipping tank. 2. Sliding rack. 3. Steam coil. 4. Folding door for removal of lacquered goods. 5. Track for sliding rack.

e, *e*, are designed for carrying bearing pieces *f*, *f*, connected with rods on which the dipped or brushed articles may first be hung to drain, and afterwards pushed into another chamber to dry. A second row of articles is then pushed in, dipped or brushed and disposed of in the same manner. When the chamber is full, the rod first filled and which

is nearest to the exit is withdrawn. The doors may be balanced by springs or weights so as to close automatically. The charging and discharging doors are best placed at opposite ends of the lacquering chamber, which then makes the process a continuous one, and in which case the articles to be coated are placed on rods swiveling on a vertical shaft. The container should be of sufficient size and protected from drafts, and the temperature kept fluctuating around 40°. The articles to be coated are first suspended on copper wire, and after dipping placed directly over the tank to drain, while other articles are being immersed. After the formation of the first pellicle or skin over the coated surface, and this usually occurs within five minutes, they may be removed to a drying room, preferably steam heated, and with the temperature about 45°, this heat being sufficient only to expel the dampness and completely remove any occluded moisture. If the lacquer has become so thin as to iridesce the surface of the work, the rainbow streaks may be removed by applying another coat, after the first has thoroughly dried. All articles previous to coating should be well cleansed, and as free from dirt and grease as for electroplating. Dirt, dust, dampness, cold and drafts should be carefully avoided if best results are to be attained. The lacquer smooths itself in drying, takes up its own drip, which renders it practicable to coat any article regardless of its size or configuration. If upon drying the drip is not completely taken up, the lacquer is too heavy and requires thinning. The two extremes to be guarded against in regulating the consistency of the lacquer, are iridescence from insufficient, and the appearance of a drip from too much pyroxylin.

The method of lacquering by Bradford and Rawlins [1] economizes space by constructing frames connected by tie beams and provided with ledges or supports for the runners of a series of sliding trays. These are adapted to receive the lacquered articles, the bottoms being formed of a number of narrow strips. The filled trays are inserted in the frames, which may reach from floor to ceiling. Any artificially heated room is said to be suitable. The method of A. Junghans,[2] which consists in substituting artificial light for artificial heat, as in the direct light from an electric arc lamp, has never been used extensively.

C. Schroeder, L. Levi and A. Lasche [3] have patented a method of coating cigar tips with a waterproof, pliant, non-scaling coating, using

1. R. D. Bradford and G. Rawlins, E.P. 24132, 1896.
2. F.P. 321821, 1902; abst. J.S.C.I. 1903, **22**, 288.
3. U.S.P. 951582, 1910.

pyroxylin, the inorganic salts of a fatty acid[1] and a "balsam."[2] Their preferred formula consists of collodion 10 cc., calcium resinoleate 1 gm., Venice turpentine 1 cc. and alcohol 8 cc.[3] The tips of the cigars are dipped in this lacquer and dried, the coating being sufficiently flexible so that when the cigar is placed between the lips or teeth and compressed, there is little liability of cracking or scaling off, and the cigar wrapper is prevented from unwinding.

Lacquered articles are not injured by dirt, may be cleansed by the cautious application of warm water and soap, will not chalk, and readily take a high polish. It is an error, however, to attempt to polish lacquered metals, for the friction only removes the protecting coating. Dipping is a cheaper and much more rapid method of coating than brushing, especially with articles of engraved or intricate design, as fancy door knobs, escutcheons, chandeliers and statuary. If the lacquer becomes too thick, it should invariably be diluted only with the thinner which accompanies it, and with which it is designed to be used. Serious difficulties have been experienced by attempting to use a thinner procured from one source to reduce the consistency of a lacquer obtained from another manufacturer, both lacquer and thinner being designed for the same class of work. This is because producers of lacquers adjust the solvent portion to accord with the nature and physical characteristics of the pyroxylin employed, and also as has been said, because the point of precipitation of the pyroxylin has been very closely approached by the use of a maximum amount of the cheapest non-solvent (benzine).

Pyroxylin Paper Impregnation. For the protection of important documents or papers subjected to wear or the elements, impregnation of the paper with a cellulose nitrate solution is often resorted to. In printed matter, as engravings, maps, or stenciled work, no especial precautions are necessary, but often the more important documents are written or engrossed with India inks, which contain shellac as a vehicle to hold the carbon in the ink in suspension. The fluids entering into the usual pyroxylin lacquer formulas are ready solvents of shellac, therefore dipping such a document in a pyroxylin lacquer would seriously decrease the legibility of the writing. In such instances, the document is first immersed in a 2% solution of gelatin, allowed to dry, and then immersed in a 6–8

1. Calcium, barium or strontium caprylate, magnesium stearate, or calcium, oleate, linoleate or resinoleate are claimed as satisfactory for this use.

2. Venice turpentine, Canada balsam, Peru, tolu or copaiba are specified.

3. The calcium resinoleate, Venice turpentine and alcohol are combined and heated until calcium resinoleate dissolves. The mixture is then cooled and the collodion added.

oz. pyroxylin lacquer, after which it is dried at ordinary temperature. With aniline black, logwood, or the modern tannin-iron classes of inks, direct immersion in the lacquer followed by drying is the usual procedure.[1] The amount of pyroxylin in solution is varied according to the surface of the paper; with those papers which are heavily filled and present therefore a smooth glazed surface, a lighter coating is required than with papers without filling. Usually one coat is sufficient. To prevent attacks of insects or molding, naphthol and similar fungicides have been added, but it has been noted in isolated instances that the naphthol apparently exerted an appreciable effect on the inks. With legal instruments whose authenticity is called in question and which are made the basis of examination and testimony before courts of law, it is often advisable to coat the document (a will, for instance) with pyroxylin lacquer, before the instrument is turned over to the handwriting and ink experts, that no dirt or other marks may come in contact with the surface of the paper during what may be extended microscopical investigations, and the unavoidable handling which such an instrument undergoes when offered in evidence.

In the preparation of stereotype paper according to the process of D. Gestetner[2] the paper is coated with a wax composition which dries and hardens on exposure to the atmosphere. This composition is prepared by mixing Javanese paraffin wax, 3 parts, carnauba wax, 1 part, and linseed or other drying oil, or fatty acids of the same, 3 parts, all by weight. The composition is kept in a molten state in a closed vessel from which the air is exhausted; a little terebene may be added, the vapors of which will fill the interior of the vessel above the molten wax, or an inert gas may be introduced into the vessel instead of exhausting the air from the latter. The paper is given a final coating by immersing in a 5 oz. to the gal. pyroxylin solution to give a smooth surface and prevent soiling. So-called "perfume paper" (Armenian or Oriental paper) is unsized paper which has been nitrated, dried, impregnated with an alcoholic solution of ethereal oils and resins, and then re-dried.

Manufacture of Collapsible Tubes. B. J. B. Mills[3] proposes to form collapsible tubes and other tubular articles from a solution of pyroxylin preferably in amyl acetate, and of about 8 oz. strength. A small amount of drying oil, as linseed or castor oil, to impart greater

1. The modern writing fluids contain a blue water-soluble triphenyl rosaniline dyestuff in solution to give a distinct first color until the atmospheric development of the combination of the tannin and iron is sufficient to establish a heavy permanent color. These dyestuffs, as well as the indigo-carmines formerly used for the purpose, are unaffected by the cellulose nitrate solvents.

2. E.P. 395788, 1908.

3. For the Transparent Cellulose Products Company, E.P. 11505, 1902.

flexibility, is said to be of advantage. A collapsible tube is obtained in the first stage by dipping a suitable form, preferably a glass tube with a threaded neck, into the solution one or more times, and drying after each dipping. When a sufficiently thick layer has been built up, the application of hot water or wet steam will cause the tube to come away from the glass support, which is then placed in a form until dry. Attempts to produce capsules for internal administration of medicines has been a failure. Formerly it was thought that pyroxylin, like keratin, was insoluble in the gastric juice but soluble in the intestinal secretions, and therefore offered a ready media for the ingestion of medicaments into the intestines without being affected by the gastric secretions. Experiments upon the lower animals, however, have demonstrated that pyroxylin is practically unattacked by all normal animal secretions.

Coating Sounding Tubes. A process has been perfected by C. E. Munroe [1] for a device to determine sea levels, the value of which depends upon pyroxylin. It is known that in many places the land dips so gradually under the sea that the approach toward shore may be detected at a considerable distance from land and the proximity to shoals may be determined. It is difficult to carry this operation out except in comparatively shallow water and when the vessel is going at a slow speed. Greater safety was attained when Sir W. Thompson (Lord Kelvin) invented his sounding machine.[2] By means of wire instead of the old hempen lead line, it has become possible to determine depths up to 300 feet and when the speed of the vessel is as high as 18 knots per hour. In a new method suggested by Surgeon Paul Burrill, of the Compagnie Generale Transatlantique, 16.5 gm. of finely ground silver chromate is shaken with 500 cc. photographic emulsion of collodion, and after the mixture has stood in the dark for an hour, the supernatant liquid is used for the coating of the tubes. The coatings were found to be of a dull brownish-red color. The tubes react on contact with sea water, according to Mariotte's law, in which the depth of five fathoms of sea water is equivalent to a pressure of one atmosphere. The coating reacts instantly on contact with sea water, silver chloride is formed and the

1. Chem. Eng., 1909, **10**, No. 2, from Chem. News, 1910, **101**, 17.

2. "On Compass Adjustment of Iron Ships and on a New Sounding Machine," Jour. Roy. United Serv. Inst., 1874, **22**, 90; Prof. Lambert, "Sounding Machines for Preventing of Stranding," Ibid. 1891, **35**, 765. The depth is ascertained by means of a glass tube closed with a cap at the upper end which is inclosed in a sinker so as to be kept upright and protected from fracture, while the water has free access to the bottom. The water will rise in the tube the deeper the device sinks in the sea. Gelatin has also been used as the coating material and with satisfaction.

dark red chromate color discharged, and by measuring the height to which the water has risen in the tube as indicated by the line of demarcation between the red-silver chromate and white silver chloride, the depth of water at the point taken can be determined.

Testing of Pyroxylin Lacquers. A properly prepared and applied lacquer will not decrease the resplendency or change the appearance of the metallic surface to which it is applied. With silver and white metals, a slight acidity or alkalinity does not appear as conspicuous as with brass and other copper-containing alloys. If the surface of the latter turns green, acid either from the amyl acetate or pyroxylin is present; if brown, the discoloration is due to alkali, perhaps from a trace intentionally left in the nitrated cotton on drying. In order to cause changes in color to become more apparent, a polished brass strip about 6×10 cm. is bent into a boat shape by turning up the edges all around, and in this is placed a layer of lacquer several millimeters in depth, which is allowed to dry slowly with the aid of artificial heat. Any acidity, alkalinity, or wrinkling is thus intensified by the thickness of material used. The adhesiveness is best determined by coating a closely grained and highly polished surface as nickel, and after drying, determining the difficulty with which the film is removed. It is generally conceded that a trace of acid increases the adhesiveness, but such a trace must be so small as not to be noticeable as discoloring the metal to which applied. Laurie and Bailey have invented [1] an apparatus for determining the hardness of lacquers by measuring the resistance to scratching when a known and variable pressure is applied to the lacquered surface by means of a blunt point. The hardness and toughness of the layer is determined by the pressure required to scratch the film.[2]

The stability, neutrality and viscosity of the pyroxylin and freedom from acid of the solvents are ascertained before combination, and individual batches of the same formula brought to a definite standard by a judicious selection of liquids and cellulose nitrate. The amount of insoluble pyroxylin is not deducted or allowed for in compounding lacquers on a manufacturing scale, and therefore a calculated (say 5 oz.) solution in reality always contains less than this amount after filtration.

Uses. A film upon microscopical examination appears as a homogeneous structureless mass, free from holes. It is therefore practically impervious to moisture. Advantage has been taken of this fact as a

1. A. P. Laurie and F. G. Bailey, E.P. 3486, 1906.
2. J.S.C.I., 1906, 25, 819.

rapid method of preserving eggs by dipping in a pyroxylin solution.[1] Although the lacquer adheres readily to the shell, satisfactory results have not been obtained, partially due to the fact that the cooked eggs often taste of the amyl acetate and fusel oil in the lacquer. Many unsuccessful attempts have been made to preserve large fruit, i.e., apples and pears, by dipping in a lacquer, but the solution refuses to adhere tenaciously enough so that evaporation from the fruit takes place, which lessens its volume, and this contraction tears the film away from the peel. However, pyroxylin lacquers have nearly superseded paraffin and oils as a material for rendering small wooden tubes and boxes "air tight," one application of a 4 oz. solution by dipping being usually sufficient. Wood thus coated is less prone to attacks by insects, and hence pyroxylin acts as a distinct wood-preserving medium.

Iridescent gelatin as a protective coating may, according to Alary and Choisy,[2] be prepared by dipping the gelatin into resin, gum or other highly refractive substance suitably dissolved in benzine, turpentine or carbon bisulphide, and when dry, dipping in "collodion" lacquer. When silk or wool is treated with 1 part cellulose nitrate in 100 parts Hoffman's ether [3] in the usual manner, according to Henry [4] the treatment renders the silk or wool more hygienic. That is to say, it maintains the body at a more uniform temperature than the ordinary fiber.

A variety of effects is said to be produced by printing upon damped fabrics with a pyroxylin lacquer. Samuel [5] considers that the process may be more conveniently carried out by means of a multicolor printing press, the apparatus used for printing the first color being used for damping the fabric. The nitrocellulose solution is applied by means of a plain or engraved printing cylinder. It is stated that the preliminary damping is essential for the production of brilliant effects. The colored figures and dots on stockings are frequently produced by this means, as well as the figures on cambric, lawn and other inexpensive cloth. The white colors are often produced by means of waste celluloid scrap dissolved. In a subsequent patent [6] the idea has been extended to include the various textile threads, which, when coated, it is claimed closely resemble silk threads. Hunt and Eastwood [7] have devised an ink suitable for printing purposes, composed of a pyroxylin solution in alcohol, to which camphor and coloring agent are added. By slight modification such an ink may be applicable for printing on paper.[8]

1. Method of E. H. Barlow, E.P. 11054, 1902. 2. F. P. 328357, 1905
3. This is composed of ether 30% and alcohol 70%, both by volume.
4. E.P. 20092, 1899. 5. F.P. 348015, 1904. 6. F.P. 348137, 1904.
7. U.S.P. 256597, 1882. See Sericose. 8. U.S.P. 256596, 1882.

A rather unusual use has been described by Bentley,[1] which consists in coating paper, pasteboard or a textile fabric, suitable for painting upon in oil or water colors, with a coating composed of pyroxylin,[1] amyl acetate and oil of cedar.[1] When dry a layer of gelatin or isinglass dissolved in sufficient water to make a strong jelly when cold, is painted on. The finished material, which is free from gloss, may also be used as an application to an engraving or picture in monochrome, the whole being afterwards treated with any color.

As a glaze for carbon paper, pyroxylin is rapidly replacing the albumen formerly used. In order to prevent the paper from "smutting" during handling, it is customary to place a non-adhering glaze on the paper after coating.[2] Egg albumen, which formerly was used entirely, did not prevent the sheets from adhering when packed and transported to warm climates. Now the sheets are dipped in a 3–4 oz. solution of pyroxylin, after the colored layer has been deposited. Similarly photographs, mimeographs and stereographs may be protected from dirt and wear by a pyroxylin coat. The defects in stencils in continuous printing machines, neostyles and dupligraphs are remedied by painting on a heavy solution, using wood alcohol, acetone or other readily vaporizable solvent as the liquid menstruum. The defective parts are covered by painting with a small camelhair brush, one coat being sufficient. A. McDougal has evolved a process[3] to protect water from contamination with lead which consists in coating the lead pipes with a heavy pyroxylin lacquer, with a small amount of castor oil or castor oil and balsam tolu added to increase the flexibility. The lacquer is flowed in the pipes which are afterwards dried. Strontium or magnesium oxide is recommended to be added to increase the consistency. It is to be noted, however, that pipes so treated impart to the water for a long time a peculiar taste, especially if balsam tolu be one of the coating ingredients. Sometimes a small amount of copal is added to increase the body, and palm oil to heighten the flexibility. Babcock, Leonard and Crane[4] have patented a process for an improvement in match composition, consisting in producing the fuse strip of pyroxylin, which is molded with a friction match composition in the usual manner. The pyroxylin protects the composition from moisture and is also beneficial from its great inflammability. This becomes especially useful in mines, where the atmosphere is invariably saturated with water vapor. Fuses may be waterproofed by treatment in the same way.

1. U.S.P. 690915, 1902.
2. Carbon paper consists of paper on which is applied mixtures of carnauba, Japan and beeswax and paraffin, seldom having a congealing point above 40°.
3. E.P. 8823, 1891.
4. U.S.P. 136953, 1873.

Zand[1] obtains iridescent scales by boiling mother-of-pearl waste in dilute hydrochloric acid, and then heating to a temperature which will not destroy the organic material, the mass being then pulverized. For producing fine signs, mixtures of the above and a lacquer bring out the added value of the latter, which, being transparent, allows of the maximum iridescent effect being produced. Formerly[2] an ink for topical or "calico" printing was much in demand, being composed of a heavy (12–14 oz.) lacquer without resin, and containing dyestuffs in solution. This method of color fixation has now been almost entirely superseded by the "discharge" system of calico printing, which consists in bleaching the cloth, and then bringing out the color by diazotization on the fiber and subsequent development. As a protective covering for cloth and leather-covered books, a single coat of pyroxylin of 6–8 oz. strength makes an excellent application. The coating may be made more permanent by employing a thinner solution and increasing the number of coats to two or three. Castor oil in small amounts is beneficial in the lacquer, as it increases the elasticity although decreasing the hardness. A similar procedure[3] has been proposed in which cloth and other fibrous materials are first subjected to a bath of nitric and sulphuric acids, which partially nitrates the material. The mordant consisting of a color dissolved in amyl acetate or other liquid solvent of the pyroxylin is then printed on. The solvent penetrates the nitrated fiber, which after drying is said to resemble "crushed" or "brocaded" goods. Imitation crepe may be obtained in a somewhat similar manner by first partially mercerizing the cloth, then nitrating in a continuous bath as above, after which the colors are mordanted by printing with an amyl acetate solution, or the material may be rendered black by immersion in a wood alcohol solution of nigrosine.

Antifouling Compositions. These lacquers are intended for use on ships' bottoms, to decrease the deposition of barnacles and marine vegetation. The lacquer usually consists of a 6–8 oz. pyroxylin solution, with or without a small amount of resin added, and containing antiseptic and fungicide constituents such as naphthalin, α- or β-naphthol, salicylic acid, phenol, the cresols, ichthyol, mercuric and cupric salts, hydrazine, or hydroxylamine, iodoform or weak acids, or other substances[4] which will act destructively on the protoplasmic organisms. These lacquers adhere tenaciously to the metal plates, are apparently unaffected by the mineral constituents in sea water, and in wood-bottom vessels act as an efficient protection against the invasion

1. U.S.P. 746909, 1903.
2. U.S.P. 256597, 1882.
3. E.P. 1849, 1882.
4. I. Pflug, E.P. 12732, 1892.

of "borers" and other wood-destroying molluscs. In 1879 H. Haymen [1] proposed a mixture of powdered tin and pyroxylin applied with a brush, or euphorbium, zinc oxide or graphite for pigments, according to the method of W. Peel.[2] A. C. Furse preferred aluminum in fine powder [3] with pyroxyline as an antifouling paint, his preparation in reality being a heavy bronzing liquid. Various chemicals which are wholly or partially soluble in ethyl alcohol, acetone or amyl acetate are useful, especially if fatal to marine life, among which are lead arsenate [4] and arsenite.[5] They are incorporated with the lacquer. E. Palk and H. Basset [6] prepare a paint for preventing the adherence of vegetable an animal growths to ships' bottoms by mixing acetone and gold size with a pigment, varnish and turpentine oil.

Preparation of Museum Specimens. In the preparation and mounting of delicate anatomical and other specimens for exhibition, as seaweeds, coralines, sponges, zoöphytes and other marine objects, or for the preparation of delicate flower or other vegetable structures for dress trimming, fringe, bouquets or lace, the material is first thoroughly cleansed, dehydrated in alcohol by passing through successively increased alcohol-containing liquids, finally allowing to remain in absolute alcohol with a small amount of amyl acetate added. This treatment is necessary in order not to break or distort the delicate membranes. If the structure will permit, the specimen is gently bleached. After washing in water, the latter may be gradually replaced by a liquid miscible with water which is at the same time a solvent of pyroxylin (acetone or methyl acetate). After the water has been entirely displaced, a pyroxylin solution containing 10% oil of cloves to clear the specimen is gradually introduced, followed by a heavier pyroxylin lacquer. In order to impart a more natural appearance, the lacquer may be tinted any desired color before injection. In delicate marine objects as medusæ, very satisfactory results have been obtained. The strength of the pyroxylin prevents the delicate structures from collapsing.

Colored Lacquers. It is often desirable to impart various colors to lacquers for specific purposes. For instance, brass being an alloy of copper and zinc and the copper being the more expensive of the metals, it follows that the lighter the color of the brass, the less copper does it contain. A brass low in copper may be made to simulate one high in this metal by means of a pyroxylin coating colored the shade of the desired alloy. The dark yellow dyestuffs used for this purpose

1. E.P. 959, 1879. 2. E.P. 110, 1898. 3. E.P. 25675, 1896.
4. J.S.C.I., 1906, **25**, 325. 5. C. Dubois, F.P. 358827, 1905.
6. E.P. 24627, 1908; in U.S.P. 906668, 1908; F.P. 393764, 1908. M. Ulrich, dinitro-*o*-cresol is used.

are members of the sudan series of aniline dyestuffs, sudan G, GG, 4G, R, RR, and 5R, being the types most used. These dyestuffs are all readiiy soluble in wood alcohol, acetone or amyl acetate without residue, are very resistant to light and atmospheric influences, and not affected by weak acids.[1] Analytical balances, spectroscopes, polariscopes, microscopes and other philosophical and mathematical instruments are invariably coated with a lacquer of this description. Two methods of application are used. The older process[2] consisted in first immersing the instrument in a transparent lacquer, allowing to dry thoroughly, and then momentarily plunging in a wood alcohol solution of the dyestuff in the proportion of about 8 oz. dyestuff per gal. of solvent. Upon emerging from the dye solution the article was at once plunged into cold water to remove excess of dye, thoroughly washed by agitation, and dried without wiping. There were many drawbacks to this method. It was necessary to employ running water or often renew the water used for rinsing, or drops of the colored water would dry on the work and spot it. This was found tedious, as it introduced another dipping process, and was also not entirely satisfactory from the fact that the wood alcohol in which the dye was dissolved rapidly attacked the pyroxylin coating and dissolved the lacquer first deposited. The result was often a mottled, uneven or streaked appearance in the finished work, or if the dyestuff was slow in penetrating the lacquer, this hindered the production of even and easily duplicated shades. Addition of water to the wood alcohol, while decreasing the solvent power of the latter, increased precipitation of the dyestuff and diminished its penetration, thus requiring longer contact with the dye solution to produce intense shades. Depth of color could therefore be produced on the lacquered surface only when the coating was heavy. It was found that best results was obtained when the lacquered surface and the dye solution were at the same temperature, about 25°. Perl[3] sought to overcome the then existing difficulties by a new process in which the article was first lacquered in the usual manner, dried at 60° for half an hour and then dipped in a very weak (not more than 0.1% dye) solution of an aniline

1. H. Smith, J.S.C.I., 1901, **20**, 1188, has investigated the rate of decomposition of colored pyroxylin lacquers by exposure to light. He finds that (1) turmeric, saffron, sandalwood, dragon's blood and annatto all fade completely in sunlight; (2) that the first three named above turn lacquered brass black when exposed to sunlight; (3) that the aniline colors, auramine, metanil yellow and primrose are more suitable for coloring lacquers than turmeric, saffron and annatto because they do not blacken the brass; (4) that dragon's blood fades less readily than sandalwood; and finally (5) that gamboge is most suitable of all because of its light resistant properties.

2. First patented by J. Perl and P. Heermann, E.P. 15327, 1894.

3. J. Perl, F.P. 233727, 1893; Chem. Rev., 1896, **42**, 127.

or alizarine dyestuff. Although tendency of the lacquer to accumulate in the hollows of heavy ornamentation was greatly reduced, it was not sufficiently eliminated to entirely do away with irregularity in color. This method has now been largely, if not entirely, superseded by dissolving a weighed amount of the dyestuff in the lacquer directly. In reality the color is dissolved in a portion of the solvent, filtered, and the filtrate added to the lacquer. Lacquering and coloring are done in a single operation, usually by dipping. The colored solutions do not precipitate on standing, and when not exposed to the light lose strength very slowly. It is customary where large amounts of material are brought to the same shade to previously standardize the dyestuff used by dyeing small hanks of cotton and wool to compare the depth of shade produced. By means of a tintometer, it is possible to reduce the strength of the dyestuff to mathematical figures so that the color may be duplicated from numerical data only, and without the necessity of a colored sample as a guide.

The dyestuffs suitable for this purpose must be readily and quickly soluble in the liquids entering into lacquer formulas, unusually fast to light, not affected by exposure to the air, and not too expensive. A line of such colors from yellow through orange to red, green, blue and black would be auramine, chrysophenine, naphthol yellow, chrysoidine, aurantia, aurine, fuchsine, saffranine, rhoduline heliotrope, Biebrich scarlet, vesuvin, rosazeine, magdala red; methyl, methylene, ethyl, marine, cyanin, cyanosine, opal, Berlin, azo and naphthyl blues; malachite, Victoria, methyl, ethyl, brilliant, emerald, China and iodine green; bismarck or janus brown; and for black the various spirit-soluble nigrosines.[1] The above are all standard and readily procurable colors. As the diluents of these dyestuffs are usually insoluble in alcohol, it is preferable to obtain only the most concentrated brands, which money value considered, are the least expensive. The eosines, erythrosines, rhodamines, phloxines, although brilliant colors and readily soluble, are very fugitive to light. By an admixture of the above-named primary colors, innumerable intermediary shades may be produced. Mixtures in imitation of the various shades of gold, copper and the bronzes are most in demand, and one American firm puts on the market a series of these lacquers designated as 12, 14, 16, etc., carat in imitation of the color of gold of this purity. These solutions

1. It is impossible to give detailed formulas for the shades demanded by the trade. This is because each dyestuff has several grades, concentrations, degrees of purity and depths of shade, and a dyestuff of one name and number from one firm may be entirely different from the material of same name procured from a different source. Furthermore, the method of dye manufacture and the blending, standardizing and compounding by the jobbers, render the value of exact formulas practically *nil*.

are used for coating collapsible tubes, metal sprinkler tops for perfume and toilet-water bottles, buttons, buckles, toys, etc. Bismarck brown, auramine, aurine, naphthol yellow, chrysamine and flavine are the dyestuffs most frequently used. The metal to be covered is usually a lead-tin alloy, or a brass or bronze deficient in copper. The articles may be tumbled in a barrel with the lacquer where large quantities are to be handled, just sufficient lacquer to cover them being used. With small articles as paper fasteners, a number are placed in a centrifuge, a large amount of lacquer poured in, and the excess whizzed out. The coated pieces are then taken out while still moist, placed in sieves in a warm place in such a manner that the individual pieces do not come in contact, where they remain until dry. Paper fasteners and other devices constructed of wire usually pass through a bath of the colored lacquer before being shaped, and this is noticeable by examining the places where the wire has been cut at the ends, which will be found uncoated.

The vegetable coloring matters, although now almost entirely superseded by synthetic dyestuffs, have yet many valuable properties, especially in their excellent fastness to light.[1] Gamboge[2] is still used quite extensively, on account of its powerful tinctorial properties, ready solubility in alcohol, great resistance to light and peculiar greenish-yellow color. The coloring matter from various species of lac after extraction finds a limited use as a dyestuff in cheap jewelry, as a color for flowers, and is much faster to light than fuchsine or safranine.[3] It is customary to filter a dyestuff before use.[4]

1. Fustic, camwood, cudbear, dragon's blood, archil, indigo, quercitrin, turmeric, logwood, catechu, peachwood, madder, Brazil wood and cochineal were the natural dyestuffs most frequently used. They were prepared by extracting the colorifics with alcohol or dilute acids, or alkalies, evaporating to dryness and purification by extraction with alcohol, ether or chloroform.

2. It is probably the fastest organic color to light that is known. Gamboge is the dried juice from various species of cambogia tree (*Garcina hanburii*) which is usually received in the hollow joints of the bamboo, the water expelled, and then sent into commerce in this condition. Therefore the common name "pipe gamboge." It is a yellowish gum-resin, partially soluble in alcohol and ether, to which it imparts an intense yellow color. When pure it is said to be completely dissolved by the successive action of ether and water. Dragon's blood, turmeric (*curcuma*), logwood, campeachy wood, fustic and catechu are but little used in pyroxylin lacquers.

3. The lac of commerce is obtained principally from various seed- and shell-lacs, the material being extracted with hot water to which a small amount of alkali has been added. The alkali aids in the extraction of the coloring matter. After extraction, the dye is dissolved in alcohol or ether, filtered, and the solvent distilled off. Lac is a ruby-red color, readily soluble in the solvents of pyroxylin, and very fast to light.

4. The majority of the basic dyestuffs, which are of the spirit-soluble class, are either diluted with inert material, as dextrin, to increase their weight, or with sodium chloride (salt) or sulphate (Glauber salt) which are normally present in small amounts incident to the usual method of manufacture by "salting out."

White Enamels. Under this commercial name are comprised a number of pyroxylin lacquers, which contain a white pigment in addition to the cellulose nitrate. In general, they are heavy, viscous solutions, containing zinc oxide, carbonate or sulphide as the pigment, which has previously been ground in fusel oil.[1] If carefully ground, the pigment will remain in suspension for a long time, and if settled may be readily stirred and made uniform. These enamels are used as a coating for metallic bedsteads [2] and to cover the tips of corset stays. The article to be coated is dipped, usually two coats being required. Although a very heavy-flowing solution, when properly prepared and applied, it readily takes up its drip, and in doing so forms a hard lump or excrescence on the point, so that a piece of metal as a corset steel dipped in the solution is covered with a round and smooth layer. It hardens without difficulty, even in the cold, and takes a high gloss. A double grinding of the pigment in fusel oil is usually made, in order to reduce the pigment to a very fine state, and assist in keeping the zinc in suspension, which develops the maximum opacity and covering power. A trace of methylene blue dye added to the lacquer makes the yellowish tinge less noticeable. In the coating of corset stays the tips are suspended downward, but the contractility of the lacquer is such that a noticeable drop does not form at the coated end. The balance of the stay is wrapped with paper before dipping, which is more economical and just as efficient as coating the entire stay. Camphor or its substitutes may be added to the lacquer in small amounts to increase its adhesiveness, which it apparently does. A representative formula would be:

Amyl acetate	55	parts by	volume
Wood alcohol, 97%	25	"	"
Pyroxylin	14	"	weight
Zinc oxide, carbonate or sulphide	13	"	"
Camphor	1	"	"
Refined fusel oil	10	"	volume
Benzine 62°	20	"	"

1. The quantity of pigment required to produce the desired opacity will depend upon the nature and fineness of the pigment used. Lead salts are objectionable on account of being affected by sulphur. The pigments known as ponolith, lithopone, and by other names, and consisting of a mixture of barium sulphate and zinc sulphide, are usually too dense to remain in suspension properly in a liquid of this fluidity.

2. Another method of coating metallic bedsteads is by means of a linseed oil base with pigment, but it will be noted that material so covered invariably has a decided yellowish tinge, readily recognizable when compared with a white object, the color being imparted by the oil.

The ground pigment is stirred in the pyroxylin previously dissolved in the first two solvents, the benzine being added in small portions at the end.

Modern Celluloid Lacquers.[1] As has been mentioned, this term at the present day is practically a misnomer, for as a class present-day pyroxylin lacquers are free from camphor, at least in anything like the quantity present in celluloid. The name, however, has been handed down from the time when an alcohol-ether formula with collodion cotton was used for photographic purposes. The extension of knowledge concerning the cellulose nitrates and the esters prepared from the alcohols of fermentation, has now entirely replaced the volatile solvents used as the basis of the original celluloid lacquers. However, at the present day, the scrap from the manufacture of celluloid collars, cuffs and shirt fronts is utilized in the production of the white enamels described above, and these preparations in reality are celluloid lacquers. The collar and cuff clippings, together with additional pigment, is agitated in a tumbling barrel with solvent, the bits of cloth expressed from the dissolved portion by straining through a 50–60 mesh wire sieve, and the expressed cloth washed with solvent. This produces the lacquer of high viscosity described above. The amount of scrap required for a given formula continually varies, due to the changing proportions of pigment and cloth present in the celluloid. The formula is best arrived at by a quantitative determination of the celluloid. The weight of a sample having been obtained, it is extracted with amyl acetate, the insoluble material consisting of pigment and cloth evaporated to dryness and weighed, after which it is ignited, when the cloth, pigment and combined pyroxylin and camphor may be determined. To separate the pyroxylin and camphor, the amyl acetate extract is diluted with a large amount of amyl alcohol, which precipitates the pyroxylin, while the camphor remains in solution. The weight of the dried nitrocellulose gives the result sought. This method is not time consuming and is sufficiently accurate for commercial work.

Various devices have been introduced from time to time for cheapening the cost of these lacquers without detracting from their efficiency. In the main, the processes proposed have been unsuccessful. M. P. E. Gerard has suggested a composition of gelatin and pyroxylin, both being readily soluble in concentrated acetic acid. They are dissolved separately and mixed as required. However, it was found that the gelatin was prone to harden in an acetic acid solution, and, moreover,

1. For the French method of manufacturing celluloid lacquers, see Farben Zeit., 1908, **14**, 122. See also celluloid lacquers in Mitt. Malerei, 1908, **24**, 190; **25**, 107.

was readily soluble in water, so that the lacquer could not be used for outdoor work.

Resin Lacquers. To those solutions free from pyroxylin or turpentine, and yet containing amyl acetate or fusel oil as the essential solvent, the term "gum" lacquer has, in error, been applied. Containing no gum whatever, they are in reality resin lacquers, and as such should be designated. In the order of their relative importance as resin-lacquer constituents may be mentioned shellac, copal, sandarac and mastic.[1] Amber and the harder copals (Zanzibar and Mozambique) are insoluble or difficultly so in fusel oil and less so in amyl acetate. Fusion or other preliminary treatment increases their solubility. Dammar has a too limited solubility, its use having been restricted to lacquers for coating maps and steel and copper etchings. It imparts a high gloss to paper coated with it. The oleoresins elemi and myrrh[2] are too soft for use alone, but when employed in small quantities in conjunction with the softer copals and sandarac they apparently increase the elasticity and reduce the brittleness of the latter. This is especially true of the balsams, tolu, Peru, storax and benzoin, and the gum resin ammoniac, which are still softer, but which are introduced in small quantities along with the various resins for no other apparent purpose than to assist in toughening the film, which it seems as if they did. All are readily soluble in methyl and ethyl alcohol, and possess a pleasant ethereal odor, which adheres to the dried film with great tenacity.

The resin lacquers as a class are applied by brushing. This is made necessary by the large amount (1–4 lb.) of total solids in solution. Often, as in covering flat surfaces, they are flowed on and then brushed out. A properly prepared resin lacquer will not turn cloudy on a damp day, will smooth out the brush marks when applied by brushing, dries with a high gloss without artificial heat, and in other respects deports itself like a concentrated pyroxylin lacquer with a reduced viscosity. The resins contain varying amounts of so-called resin acids, of an acid character to indicators, and which readily attack metals. Therefore in coating copper-containing metals, care has to be exercised that the acidity is reduced to the minimum before using. As a class they are characterized by great solubility with low viscosity, are always filtered

1. The term resinous and resinous substance is rather loosely defined. It generally comprehends certain normal (sandarac) or pathological (shellac) processes or secretions of plants, and are rather considered as oxidation products of the essential oils. According to Wallach the terpenes especially, appear to stand in a close relationship to them.

2. A lack of definite nomenclature exists for these bodies. Gum resins, being combinations of both gum and resin, are partially soluble in water and alcohol. Oleoresins contain one or more volatile oils in addition to resin.

before use, and are miscible in all proportions with pyroxylin solutions, provided the solvents in the two liquids have been properly adjusted.

Shellac [1] is found as a crust surrounding the twigs or extreme branches of several species of trees growing in the East Indies, and considered as an abnormal exudation due to the puncture of the bark of the tree by an insect, Coccus lacca. It is the most important and widely used of the resins. The more common commercial varieties are stick lac, being the deep reddish-brown resin taken from the tree still encrusting the small twigs around which it has concreted; seed lac, light-brown fragments broken from the twigs; and shellac. This latter is prepared by melting either of the foregoing, previously deprived of its water-soluble coloring matter, melting, straining to remove sticks and dirt, and then pouring the liquid melt upon a smooth flat surface to harden. When cold it is broken up and becomes the irregular-shaped fragments met with in commerce. The coloring matter known as lac dye was formerly of considerable importance. Bleached shellac, the purest and most expensive form, is ordinary shellac free from dye, and further decolorized by exposure to sunlight or mild bleaching agents. It is met with in the form of twisted sticks or reduced to a fine powder.[2] Bleached shellac is the grade usually used in lacquers, although a partially purified product called "orange" shellac finds extensive employment in floor varnishes and as a wood filler in interior work. Bleached shellac contains from 4–7% wax, and often 15–20% moisture, even when "bone" dry. The growing scarcity and marked increase in cost during the past few years, coupled with the fact that it has been difficult to submit incontestable chemical evidence as to the nature and extent of adulteration practiced, has led to a serious lowering in quality of the finer grades of shellac. Rosin is the principal adulterant. The solubility in ether test [3] with a limit of 5% colophony dissolved, and solution in 96% alcohol [4] have been shown to possess but approximate value. Langmuir [5] determines the purity by means of the iodine absorption number with the Wijs method, and with strict attention to details as laid down by him, gives the aver-

1. For bibliography of these resins, see K. Dieterich, "Analysis of Resins," 1901. Shellac, 224; Copal, 144; Sandarac, 214; Mastic, 202; Dammar, 150; Amber, 116.

2. Unless stored under water or away from the air, shellac gradually loses its solubility in alcohol under the influence of air. The opposite takes place with many copals, which after having been exposed for a long time to sunlight and air, absorb oxygen and become more soluble.

3. Oberdorffer, Archiv. d. Pharm., 1880, **153**, 13. Welwart (Chem. Ztg., 1907, **31**, 143) has tested samples of shellac of normal appearance, but which did not dissolve properly in borax solution although they dissolved in alcohol, and found as adulterants condensation products of aldehyde and phenol. Such samples proved quite useless for polishing and finishing. See Bakelite and resinit.

4. Klar. Apoth. Zeit., 1897, 424.

5. J.S.C.I., 1905, **24**, 12.

age iodine absorption number of shellac as 16 and of rosin 228. Before use, shellac must be deprived of its water and freed from wax. The first is accomplished by exposing the ground resin in thin layers to a temperature of 45–50° until no further loss in weight takes place. It may then be deprived of wax by either of the following methods: (*a*) Dissolve the resin in a 10% aqueous sodium carbonate solution, filter from undissolved wax, and evaporate to dryness. By adding alcohol to the dissolved mass, the shellac will dissolve while the carbonate is insoluble. Or (*b*) better dissolve in 3 parts refined fusel oil [1] in which the shellac is readily soluble. Benzine, which is immiscible with the alcohol, and an excellent solvent for the wax, but practically a non-solvent for the shellac resin, is added to the fusel oil-shellac mixture in any convenient quantity. Being of lighter density it forms the upper layer. By now applying heat as with a steam jacket accompanied by continual stirring, the wax in the shellac may be made to pass into the benzine, which is removed while still hot, excess of wax allowed to precipitate out on cooling, and the balance removed by distillation of the benzine. Usually two extractions are sufficient. The extracted wax is of no other value than as a retarding agent to evaporation in solvent paint removers, in which it should give excellent results. The opalescent fusel-oil solution may be still further clarified from wax by sifting in an inert, inorganic base, as zinc oxide, magnesia or barytes, stirring for some time, and allowing the mixture to settle in a warm place.[2] A small amount of shellac is deposited with the pigment. Benzine 62° is to be used preferably on account of its higher boiling point and consequent less loss of solvent from evaporation.

In Grieger's method of purification, 1 part of shellac and 4 parts 97% ethyl alcohol are dissolved together on the water-bath, and enough water is added to the solution to precipitate the shellac in a cheesy mass. This occurs when about 35% water has been added. The whole is filtered through paper, washed with 60% alcohol, the filtrate distilled and the residue dried, which forms the purified product sought.[3]

Shellac Lacquers. These solutions have remarkable luster, very great transparency, and are distinguished for their elasticity and

1. Method of W. D. Field, E.P. 15772, 1887.
2. While a small amount of wax would not be detrimental in shellac intended for polishing purposes, yet in lacquers it tends to produce a film which can be chalked (scratched) more readily.
3. The patented process of J. Casthelaz and C. Depoully, E.P. 1879, 1871, consists in adding hot sodium carbonate to the shellac in water, and then decolorize with sodium hypochlorite and removing the wax by the addition of paraffin to the hot solution. Hydrochloric acid is then used to precipitate the shellac, which is washed with cold water and dried.

strength. They are especially adapted for covering wood, as pencils, penholders, brush handles and fine grained work. When used for metals, care has to be exercised, on account of the free resin acids present, that the luster of the metal is not diminished, or the color turned to green. The wood article to be coated does not require any preliminary treatment, except that it is expedient as a matter of economy to apply a wood filler to floors before coating to diminish the quantity of the more expensive lacquer required. Wood may be either dipped or brushed, usually the latter, the preferable temperature for the solution and air being 45°. In a cold room and with chilled lacquer the dipped or brushed work does not as readily flow out, and this is noticeable by an increased amount of solution required to cover a given surface. A chilly room may also impair the brilliancy of the finish. The nature of the solvent (fusel oil) causes slow drying, and care must be exercised that additional coats are not applied until the previous coat has thoroughly hardened. A flat brush gives best results, and it is not necessary to attempt to smooth out the brush marks, for a good brush lacquer when passed over the same surface many times will still continue to flow out and obliterate the brush marks until nearly dry. The brushes are more conveniently kept in a brush holder when not in use, the arrangement of R. Bachia being convenient and reducing evaporation to a small amount (Fig. 84).[1]

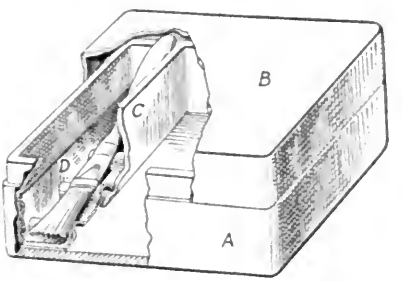

FIG. 84.—The Bachia Lacquer Brush Holder.

The same results are obtained by substituting wood alcohol as the shellac solvent, instead of the more expensive and slower drying fusel oil. The work, however, will dry more quickly and have a greater tendency to absorb moisture and become clouded, especially on damp days. Varying intermediate speeds of evaporation may be obtained by combinations of different proportions of wood, denatured ethyl and amyl alcohols, or the lighter boiling point fractions of fusel oil rectification may be used, which, when properly dehydrated, make excellent shellac solvents. In this manner, adjustments for various classes of work may be made.

Livache[2] states that the adherence of a shellac alcohol lacquer

1. The holder, which is of glass, has a shoulder as shown, so that the flange of the lid *B* will be flush with the box.

2. "Manufacture of Varnish," 196.

when applied to metals may be appreciably increased by the addition of 0.3–0.5% boric acid, Kremer advocating the use of 0.2% sodium paratungstate for the same purpose.

Burning Off Lacquers. Shellac possesses a high coefficient of expansion, hence contracts greatly on passing from the liquid to the solid state, and this contraction results in the production of a very tough film. This fact is unwittingly made use of in the so-called "burning off" lacquers, which are solutions of shellac in low-boiling and readily inflammable liquids, usually wood alcohol and benzine, with just sufficient fusel oil added to cause the two liquids to unite. The metal is immersed or brushed and then immediately ignited. The mass lights, the heat generated by the combustion being sufficient to soften and melt the shellac, which then readily flows out, all air bubbles escape, and upon cooling solidifies to a film of high gloss and great strength. Owing to the risk of fires attendant upon its use, this method of lacquering is gradually falling into disuse, and before long will no doubt be entirely discarded. The same result is approached with those shellac solutions used in coating large pieces of metal as lamp shades and globes. Usually one or more pigments, previously well ground in fusel oil is mixed in, after the coated metal which must have a smooth surface, is thoroughly dry. If a coat rolls up under the brush or does not sandpaper smoothly, it is assumed that the under coats have not been given sufficient time to properly harden. After the coat has become thoroughly dry, it is ragged and polished on a buffing machine, where the friction of the cloths raises the temperature of the coated metal to the point of incipient fusion of the shellac and it softens. This procedure [1] apparently increases the adhesion of the resin film.

French Bedstead Lacquers are solutions of highly refined and bleached shellac in ethyl alcohol and colored entirely with vegetable dyestuffs (gamboge, lac, dragon's blood, saffron, etc.), the shellac being usually present in amounts varying from 1.5–2.5 lb. The colors are the various shades of gold. The lacquer is brushed on the metal while the latter is cold, after which the piece is subjected to a temperature of 75–85° for 20–30 minutes in an oven, the process being similar to that of baking in the coating with japans. These lacquers have the reputation of being exceedingly fast to light, will take a high polish, produce a brilliant finish, and are among the most costly of the shellac lacquers. Curiously enough, the solvent appears to add to the value of the lacquer by imparting increased hardness to the film, and it is a matter of personal observation that the same resin

1. First patented by C. Harrop, E.P. 3008, 1888.

in wood alcohol does not apparently produce as hard or brilliant film. A "mat" or dull finish is imparted by the addition of pigment. Goldscheider [1] proposes to add ordinary starch to increase the opacity, but experiments made with corn and potato starch indicate the starches to be entirely too soft. Wachendorff [2] adds a basic aluminum compound, as aluminum hydroxide or basic aluminum silicate. Usually a pigment or lake,[3] well ground to develop the color, is incorporated with the shellac, and this, being but a suspension, must be frequently stirred during use. A mat finish, of course, can never be transparent. The recent tendency of all lacquers away from high gloss and towards simple and sober shades has materially decreased the demand and narrowed the field for this class of lacquers. When both opacity and gloss are desired, an additional transparent coat is given.

Bucklin [4] toughens shellac by heating the resin in water under sufficient pressure to raise the temperature to at least 160°. This is maintained for 28–30 consecutive hours, when a portion of the shellac is said to pass into solution in the water, to which it imparts an acid reaction. It is claimed that the undissolved portion is made much harder by this treatment. So far as the author is aware, no attempt has been made to utilize the process in pyroxylin lacquer manufacture.

Pegamoid. The French lacquer produced under this name and which formerly had a considerable sale in the United States, is said to be composed of bleached shellac and ethyl ether, each one part, camphor, mastic and acetic ether each 2 parts, and pyroxylin and acetone each 4 parts. It is intended solely for brushing, as indicated by the composition.

Copal. Only the softer varieties as previously stated can be used, on account of their imperfect solubility. Copal [5] may be either fossil, recent fossil, or of recent origin. It varies in appearance according as to whether it is in the crude, decorticated or washed condition. All are more or less vitreous, transparent, yellow to red in color, and without a faceted (goose-skin) appearance, the latter being especially characteristic of Zanzibar copal. It is a peculiar fact that the hard copals are of less density than the soft, i.e., the gravity is in inverse proportion to the value.[6] The specific gravity varies between 1.06–1.12. The softer varieties are readily soluble in wood alcohol, refined

1. D.R.P. 165241, 1905. 2. E.P. 12460, 1905.

3. The general distinction between pigment and lake is that although both are colored, the former is entirely inorganic (mineral), while the latter is formed by the combination of a water-soluble organic dyestuff and an inorganic salt, usually aluminum or tin hydroxides.

4. U.S.P. 766167, 1904.

5. Animé is the name by which it is known in Britain.

6. This difference is attributed by Bottler to the air included in the cavities of the harder varieties, and he has demonstrated the accuracy of his assumption by reducing the resin to a fine powder and then determining the density.

fusel oil and acetone, less so in ethyl and amyl acetates, and not at all in benzine and benzene. According to Berzelius, the addition of a small amount of camphor to alcohol greatly increases the solubility of the harder copals in that menstruum.[1] Fleming's patented discovery of the solubility of the copals in epi- and di-chlorhydrin has been used in the lacquer industry to no great extent.

Copal Lacquers. In general it may be said that with the exception of rosin, copal is the least expensive of the resins used in lacquers, and is employed for the same purposes as shellac, but for an inferior class of work. It has been not inappropriately called "imitation shellac." Combined with the aniline dyestuffs, it finds extensive use in ornamenting metals as the colored parts of lanterns, toys, capsules, foil and metal fruit and vegetable cans. The old-gold color on preserve tins and salmon cans may be produced by dipping in a copal (3 lb.) solution in fusel oil 60% and benzine, with Bismarck brown as the coloring matter. Best results are obtained by J. B. Freeman [2] in coating tinware when 10–30% turpentine is added to the fusel oil copal solution, he having found, so he states, that the adhesion is materially increased as the result of adding the turpentine. This, no doubt, is so.[3]

Resin lacquers are more efficient than pyroxylin lacquers as coverings for electric-light globes, for although the former are not as hard and brilliant, yet they are less affected by heat. Pyroxylin under similar conditions would gradually disintegrate when exposed for any great length of time to the elevated temperature. The increased softness of the copal is not a drawback in this class of work, for the bulbs are subjected to no wear and but little handling. Inexpensive preparations, as those of copal, are invariably applied by dipping—the least expensive method of covering. The flow is usually poor and finish defective. Copal solutions are generally clarified by settling

1. Amyl alcohol is probably the best solvent.

2. E.P. 2322, 1880.

3. Where large numbers of small pieces are to be coated, the articles may be lacquered by means of roller machines, one form of which is shown in Fig. 85. The lacquering surface f^1 and f^2 are carried by cylinders c^1 and c^2, which are geared together so as to rotate in the same direction. The article L to be lacquered is supported by pairs of discs b^1 and b^2, carried by the cylinders and by pairs of discs, B^1, B^2, mounted upon pivoted arms a^2. A. Lübbertsmeier and G. Klug, E.P. 29620, 1904, have devised a continuous machine for lacquering, and afterwards drying, thin metal bands (Fig. 86). The bands are wound off the flanged rollers 2, lacquered by the rollers 7, rotating in the trough 6, and are then dried by passing over revolving spindles 19, arranged on a frame 13, in a hot-air oven. The bands are turned through 180° between the spindles to prevent the coated surface from touching the latter. When the interior only (small can or barrel) is to be lacquered, an apparatus (M. D. Kramer, E.P. 25362, 1902) as illustrated in Fig. 87, may be used, the solution being deposited in the form of a spray. The frame support for the barrel or can (c) is placed over a heater (d). The frame carries an oscillating pump (a) which has a valve at its upper end which is held closed by a projection in the tube h. The excess of lacquer falls back into the storage tank.

or straining through muslin or cheesecloth, and are never paper-filtered. Copal lacks that luster, hardness and transparency so characteristic of shellac. In purchasing the cheaper copals it is customary to first make a preliminary solution, in order to detect the presence of insoluble psuedo or bastard resins, which are entirely insoluble in methyl or amyl alcohols, remaining in suspension as translucent mucilaginous pellicles, removable with difficulty, as they seem to have about the same density as the solution in which they float. They seldom rise or subside,

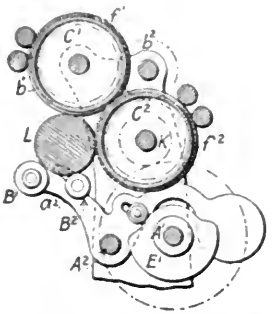

FIG. 85.—A Roller Lacquering Machine.

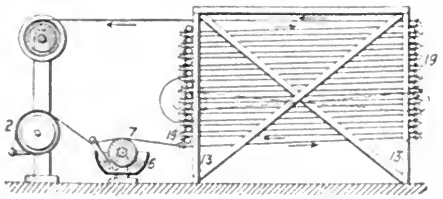

FIG. 86.—The Lübbertsmeier Continuous Lacquering Machine.

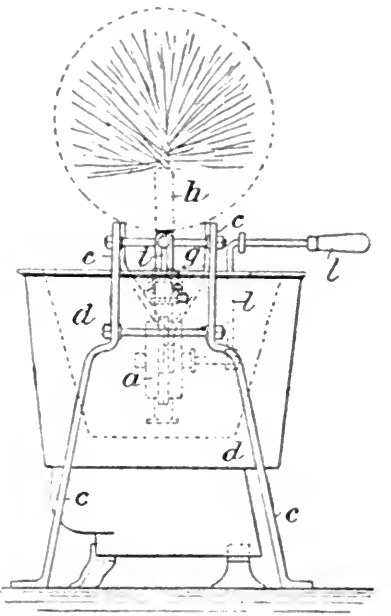

FIG. 87.—The Kramer Method of Lacquering the Interiors of Cans and Casks.

but remain suspended in the solution, even after changing the density of the latter. They may be partially removed by grinding the dissolved copal coarsely with barytes, and allowing the mixture to settle. The grinding disintegrates the pellicles, which are then carried to the bottom with the barium sulphate. Very fine grinding of the resin before solution is also a partial remedy.[1]

Sandarac is the equal in hardness of Kauri copal, with greater luster and range of solubility, and is a resin exuding naturally from the

1. This formation of pseudo compound is especially noticeable in the gums, as ghatti (which has replaced acacia to a large extent in the manufacture of mucilage due to its high viscosity). In gum ghatti it may reach as high as 20%.

bark of a small tree found in the northeast of Africa, the normal yield being increased by making incisions in the trunk and branches of the tree. Sandarac dissolves readily in methyl, ethyl and amyl alcohols, less readily in the corresponding acetates, partially in benzene and but slightly in benzine. This fact is taken advantage of in the preparation of lacquers intended to produce a translucent and frosted effect on glass.[1] When a resin as sandarac, mastic, soft copal or dammar is dissolved in a low boiling-point solvent (wood alcohol, acetone, methyl acetate) and to this solution is added a higher-boiling non-solvent, but in amount insufficient to precipitate the resin, it is evident that in evaporating such a solution to dryness, the greater volatility of the solvent will cause precipitation of the resin at some point during the evaporation. Therefore evaporation of such a solution results in a greater accumulation of the resin non-solvent, until the precipitating point is reached, when the resin is deposited. Copal has been found unsatisfactory because the precipitated resin has but little adhesive power. Mastic and dammar are only slightly superior to copal in this respect. Sandarac, however, readily dries to a hard, tough film, and being thrown out of solution in a non-crystalline form, the resulting deposit is opaque and white, resembling quite closely ground glass in appearance. This class of solutions has the advantage over chemical or mechanical glass etching, in that the resin may at any time be removed by wiping the surface with a cloth wet with wood alcohol, whereas the other two methods give a permanent frosting to the glass. Wood alcohol and 50% benzol are the liquids usually employed, a representative formula being:

Sandarac	12
Wood alcohol, 97%	65
Benzol, 50%	35

The sandarac is dissolved in the alcohol, filtered, and the benzol added in small quantities with stirring. No precipitation occurs, and with the above proportions[2] the sandarac remains indefinitely in solution. When exposed to evaporation, the greater volatility of the wood alcohol

1. Ground-glass effect is usually produced by means of a sand blast, the part not requiring etching being protected by a layer of wax or paraffin. Recently Kennedy (U.S.P. 733972, 1903) has devised a method of chemically etching the interior of electric-light bulbs. The tip is immersed in dilute hydrofluoric acid, and the air exhausted from the globe, while the liquid is allowed to rise to the desired height, when the air is admitted, and the liquid falls by gravity. The globe is then washed and dried.

2. Due to the more rapid evaporation of the wood alcohol, the thinner is an exception to the general rule that thinner and liquid ingredients of a formula are practically the same. It would preferably consist of wood alcohol 75, benzene 25 per cent by volume.

causes a gradual preponderance of benzene, and the precipitation producing the frosted effect. By varying the solvent to ethyl, propyl or amyl alcohols and the non-solvent to benzol crystallizable, benzol 90%, toluol, or xylol, aniline, toluidine or xylidine, it is possible to change the structure and vary the appearance of the precipitated resin from a fine-grained or striated effect to large fissures and striations. By using high-boiling solvents and non-solvents (amyl alcohol and xylol) a semicrystalline, cracked appearance results, interspersed with a larger pattern, and known as "craze" effect. The humidity and temperature of the room at time of dipping may be used to vary the form of the deposit, and in general the higher the room temperature and hence more rapid the evaporation, the smaller and finer grained patterns will be formed. "Frostine," "Electrine," "Electrozine," "Signaloid," "Opacine," and "Translucene" are commercial names applied to lacquers constructed on this principle. Large pieces of glass are "etched" by dipping, one side being washed with alcohol to remove the resin if desired. The principal use for these lacquers is in coating electric-light incandescent bulbs, which are always covered by dipping. The excess of liquid is allowed to flow off and the globe is then placed in a warm dry room to dry. It is quite essential to see that the glass is free from moisture. Dyestuffs in all colors may be introduced, but no pigments, which would decrease the luminosity. The precipitated resin, it is stated, reduces the candlepower about 10%. Fuchsine, methylene blue, methyl violet, methyl green, rhoduline heliotrope, aurine, and auramine are the dyestuffs most used. These are all readily soluble in wood alcohol, and are especially valuable in this connection on account of their excellency in resisting heat.

Mastic is an exudation from a shrubby tree indigenous to the Levant, which comes into commerce either as "tears," the official mastic of the pharmacopœias, or "bulk," the larger pieces which have fallen to the ground. Mastic softens when chewed, as distinguished from sandarac, which does not. With the exception of its limited use as an ingredient in bronzing liquids, it finds but little application as a lacquer, being rather too soft to be used alone. Small amounts have been applied to maps and other paper surfaces to which it was desired to impart a high polish.

Black Lacquers fall naturally into two groups, depending on whether they have a bright, glossy or a dull, dead finish. They are essentially pyroxylin or resin solutions, with the coloring matter in solution (if bright) or in suspension (if dull). The better grades—the so-called "high finish" blacks, are produced by dissolving the

various spirit-soluble nigrosines nearly to saturation in the usual 6 oz. pyroxylin lacquer. Artificial jet, imitation jet jewelry, and those applications where a hard and glossy finish is demanded, shellac in small amounts is a useful addition to the pyroxylin lacquer, and also gives additional covering power. A less expensive and much softer preparation may be made by adding a soft pitch or asphalt directly to a copal solution in fusel oil, a satisfactory formula being:

Copal	12 oz.
Refined fusel oil	80 "
Benzine 62°	48 "

This is known in the trade as " cold " or " air-drying " japan, from the fact that no heat is required in drying.[1] It will be recalled that in the usual method of japanning, the articles after coating are baked in an oven for several hours. As indicated by the formula, the above is a cheap preparation, and finds extensive use in coating hods, stove handles, and other rough ironware in hardware and agricultural implements. By replacing the nigrosine in a pyroxylin lacquer with lampblack well ground, and preferably in fusel oil, dull, somber effects are obtained, extensively used in trimmings for caskets and mourning jewelry, the inside of camera shutters and boxes, microscope and spectroscope tubes and sleeves, and in any case where extreme opacity is desired. A striking use of this lacquer is in coating aluminum plates which are afterwards engraved, the white metal showing very clearly through the black background. In order to lessen liability of chipping from cutting with the engraver's tool, and thus producing a rough appearance of the letters, a small amount of shellac is usually incorporated with the lacquer. These are known as " wrought blacks " from the wrought-iron appearance imparted to metal covered with the lacquer.

Wilson [2] has secured a patent for a combination of pyroxylin 100, with wood or vegetable tar 200, as an electric insulator, while Jacob [3] proposes to combine pyroxylin with creosote obtained from Norway tar, with boiled linseed oil, manganese dioxide and resin, as an ornamental and protective coating for iron, of especial value, the patentee claims, in outdoor work. Hyatt has devised an " ebony finish "[4] by means of the reaction between ferric chloride and hematoxylon. Solid extract of logwood is dissolved in either alcohol or methylated

1. The copal is first dissolved in the liquids, strained through cheesecloth or a 60 80 mesh sieve, and the pitch introduced in the mixture in small portions, heat and agitation being necessary to effect solution. There is practically no sedimentation. " Negraline " is a dead-finish pyroxylin lacquer.

2. U.S.P. 294557, 1884. 3. U.S.P. 234675, 1880. 4. U.S.P. 209570, 1878.

spirits, and then combined with a resin soluble in alcohol or with pyroxylin to which has been added "tincture of muriate of iron."

Pyroxylin-Resin Lacquers. A far wider range in use is obtained by combining both pyroxylin and a resin in the same mixture. By proper adjustment of proportions and liquid constituents the blending of the pyroxylin and resins can be made so as to bring out the desirable properties of both. The development of hardness and covering power without increase of flow is possible, and with the addition of colors and pigments, lacquers of great beauty and utility result, and with a great diversity of uses. The most extensively used and valuable of these lacquers are probably the combinations of

Pyroxylin and Shellac. The ratio of shellac to pyroxylin is usually about 2.5–1, the solvents depending on the relative proportion of solids, the nature of the work to be coated, and the result to be attained. In antique statuary, clocks, lamps and other ornamental objects, "weathered effects" are produced by first coating the material with the lacquer, and then partially removing it with a cloth, care being taken not to rub off the lacquer in the creases and folds of the piece. This causes the appearance of long exposure to time and the elements, with partial deterioration. As an example, the green verdigris-like appearance of copper and bronze busts and statuary may be produced artificially in this manner by means of the following formula: A mixture of copper carbonate and a pyroxylin shellac lacquer is made, the pigment having been previously ground in fusel oil, and this is painted on with a brush. Sometimes a small amount of zinc oxide is added, depending upon the extent of the oxidized effect desired. A satisfactory formula would be:

	Parts by weight
Pyroxylin	6
Shellac	14
Ref. fusel oil	30
Amyl acetate	36
Benzine, 62°	25
Wood alcohol, 97%	17

The piece to be coated, after thorough cleansing, is carefully brushed with the green lacquer, care being taken that the folds and fissures are well filled, and the exposed parts touched but lightly,[1] after which a portion is removed by rubbing with a soft cloth. After thorough drying, the work may be gone over again and removed more completely with a cloth moistened with fusel oil and amyl acetate, half and half. The metal not already coated may be protected by brush-

1. Which, it will be noted from the formula, is slow drying, with this idea in view.

ing on a colorless lacquer, but this is seldom done on account of the gloss, which would detract from the reality of the old and aged appearance. The green color of the sheet copper trimmings on the Hoboken and New York city terminals of the Lackawanna Railroad was produced in this manner, and not by the corrosive action of the salt and damp sea air, as popularly supposed.

A process for waterproofing hats has been patented,[1] which consists in applying to the hat or other object to be waterproofed a mixture of acetone 30, ethyl ether and shellac, each 5, "nitrocotton" 20 and ethyl acetate, camphor and mastic, each 10, all parts by weight. In the United States the present custom is to waterproof and stiffen the hat in a single operation by coating with a wood-alcohol shellac mixture, to which a small amount of pyroxylin is sometimes added. Pyroxylin-shellac lacquers are used extensively in the manufacture of musical instruments, and are said to improve the sonorous qualities of the wood when used to lacquer the soundboard of pianofortes.

Wood Enamels.[2] In the covering of small wooden articles with pyroxylin-shellac solutions, an industry of considerable magnitude and importance has arisen within the past few years. Previous to the introduction of this class of lacquers for the coating of wood, linseed and resin varnishes were used. These required a number of coats to produce the requisite gloss, the reason being that the varnish was absorbed by the wood, or as it is technically called "sinks into the grain," a portion only remaining on the surface. Byron Goldsmith has patented a process[3] which aims to overcome the above difficulties. According to the specifications of his patent, the first step is the application of a pure pyroxylin lacquer, the latter being preferably dissolved in amyl acetate. After the first coat has been allowed to thoroughly dry at the ordinary temperature, the second coat, consisting of a resin varnish which is a non-solvent of pyroxylin, and which therefore will not attack the first coat, is applied. A third coat similar to the second is necessary, where a very high gloss is desired. On account of the softness of the resin layer and the liability of scratching, a final pyroxylin coat similar to the first is recommended. By thus alternating the coats, it is claimed the wood is preserved in its natural color and appearance, no "foaming" from liberation of air from the interstices of the wood is experienced, and the two imper-

1. J. D. Pollock, E.P. 2568, 1896.

2. P. Jaeger (U.S.P. 953621, 1910; same as H. Keller, D.R.P. 220322, 1908) stains wood surfaces by mixing pyroxylin, an alcoholic solution of a dye-stuff, and an ethereal solution of a fat or resin or both. The composition is applied with a brush or sponge.

3. U.S.P. 490195, 1893; E.P. 19456, 1891.

meable pyroxylin skins inclosing the resin varnish constitutes a transparent coating practically proof against the ravages of insects or the inroads of time.

F. W. Oliver really laid down the principles of the art of modern wood enameling with pyroxylin in his English patent 10103, 1896, when he proposed to coat articles by immersion in a celluloid solution with the addition of zinc white pigment for color. His method ought to yield excellent results where both a high gloss and good wearing qualities are desired, as in the coating of umbrella handles, canes, pipes and other objects not flexible. The coating of these articles has developed until at present, dowels, pincushions, hat-racks, stocking darners, towel rings, and other novelties are included, and are coated in brilliant and variegated colors, dull or highly polished, and in imitation of coral, ivory, horn, whalebone, marble, onyx, etc., including mosaic. The general process is usually complete in five steps as follows:

The wooden articles, generally turned out of birch, tulip or poplar wood, are polished preliminary to coating to further smoothen the surface, and thus reduce the quantity of lacquer required to cover. A tumbling barrel in which the usual opening has been replaced by a tightly fitting hinged cover, is filled three-fourths full of articles of similar shape or size, and slowly rotated for a half day. They may or may not be afterward wiped to remove the adhering fine dust formed from contact with one another. It is customary to do so in the finer classes of work. A filler or priming coat is next applied, or the tumbling and priming may be combined into one operation by placing pigment in the barrel before rotation. This also disposes of the sawdust, which is assimilated as fast as produced. The articles after removal are allowed to stand in a warm room for a day or two to become thoroughly dry. Irrespective of the colors to be used or the subsequent coating processes, the priming coat is generally white. It is quite essential that this lacquer should be inexpensive, and lacquer settlings and bottoms are utilized for the purpose. The pieces to be coated are attached to sharp nails in a board, the area of the board being a trifle less than the inside area of the dipping tank.[1] These coating boards are arranged to hold even dozens of pieces to facilitate counting, a half gross being a frequent number. The dipping machine, which is a very simple affair, consists of a tin-lined wooden tank, rectangular in shape, over which is suspended a pulley arrangement with clutch, which lowers and raises the dipping board. This is arranged so that the articles to be coated hang downward. The board is grad-

1. They are attached by hammering with a wooden mallet.

ually lowered until the pieces to be coated are immersed in the lacquer, withdrawn, and inverted before the lacquer has had an opportunity to harden. Any excess of lacquer flows down the nail and on to the dipping board. When the film has sufficiently hardened so as not to feel tacky,[1] the board is transferred to racks in a drying chamber, another board inserted, and the operation repeated. The temperature of the drying chamber is about 45°, and the work is allowed to remain in it for about 24 hours. The first coat is usually white. The exposure to the heat of the dry room for at least the time stated is made necessary by the fact that the coat must be perfectly dry, otherwise subsequent coats will penetrate and ruin the work. If the last or color coat is plain, this operation is but a repetition of the previous one. Multicolor effects may be produced in one of two ways: The color coat may be penciled, viz., lightly touched with a small camelhair brush in a number of places with the desired color or colors,[2] after which the pieces are dipped in a transparent solution, removed, inverted and slowly rotated. The transparent lacquer being a ready solvent of the castor oil-pigment mixture, rotation causes the color to run, blur, and form fantastic shapes, somewhat in imitation of marble and onyx. Practice and the proper combination of colors result in quite natural imitations, where a not too close inspection is made. A second and more rapid method, but one which involves considerable skill and experience, is to spray the pigmented castor oil from an atomizer, spraying the pieces just after being dipped in the last transparent coat. The variegated effects, therefore, always have a high luster, due to the last coat being transparent. By means of atomizers of various colored pigments, or pigments and dyestuffs[3] startling and handsome patterns may be obtained, which unfortunately can never be exactly duplicated. With an atomizer of a primary color as yellow, and another of blue, it is possible to produce all the varying shades of yellow to blue through green, or with yellow and red, the innumerable intermediate tones through orange to red. The grain of natural ivory, which has been so closely imitated in celluloid, is attempted by spraying with two atomizers at the same time solutions of varying shades of light yellow. The results will not bear very close scrutiny. The red and black of cocabola wood is manipulated with two atomizers containing a maroon- and a black-colored pigment respectively. The individual pieces

1. That the excess may not form an objectionable drop on the end of the work.
2. The color mixture consists of the pigment ground in castor oil, no pyroxylin being added. It is necessary to use a non-drying composition, or the color would be hardened before a board of 72 pieces could all be spotted.
3. The dyestuffs produce a soft effect from blurring and running when the transparent coat covers the color.

are assembled after coating. The pigment coats, with the exception of the color, is the same as the transparent coat. A characteristic formula for the latter would be:

Pyroxylin	8
Shellac	11
Amyl acetate	36
Ref. fusel oil	6
Wood alcohol, 97%	10
Benzine 62° and 71° each	24

The solids are by weight, the liquids by volume.

Picture frames, easels and other large ornaments are coated in the same manner, and instead of spraying with atomizers an air blast and the various bronzes may be used. The dull finish on picture frames may be made by the process outlined above, only substituting lampblack for the pigment, and omitting the final, transparent coat. A brilliant luster is always to be obtained by dipping in the final transparent lacquer. Peculiar effects may be produced by spraying with alcoholic solutions of inorganic salts, which by interaction yield colored precipitates. Any inorganic salt soluble in alcohol, which will react with another salt with the formation of a colored body, would be included in this. Potassium iodide or bromide, calcium chloride, ferric chloride, lead acetate, silver nitrate are among the suitable salts. As an example, a combination of a lead salt and an iodide, resulting in the formation of yellow lead iodide, or a silver salt and iodide forming a deep-yellow silver iodide, are illustrations of the many possibilities in color production in this direction.

The Coating of Golf Balls. The coating and recoating of golf balls is a somewhat delicate undertaking, due to the difficulty in obliterating the mark of attachment of the ball to the dipping board. Coating by tumbling has always been unsatisfactory, on account of not producing a sufficiently glossy finish. The nail mark in dipping may be made less conspicuous by boring the hole larger, inserting a celluloid pin, which is cut flush with the ball and cemented there by means of a drop of lacquer. The process of J. B. Hammond,[1] illustrated in Fig. 88, consists in supporting the ball *a*, on pins *b*, b^1, one or both of which are adjustable in the box *c* or other frame, in which they remain until dry. The painting can then be done without touching the balls with the hands. The method of H. A. Armitage[2] is similar, Fig. 89, the ball being supported by a number of projecting pins, and held by a bradawl during lacquering. J. B. Page[3] has designed an apparatus,

1. E.P. 1670, 1891. 2. E.P. 22115, 1891. 3. E.P. 19854, 1893.

Fig. 90, where the balls are carried on fixed pivots, *C*, *C*, and screw pivots, *D*, *D*, flat springs *E* prevent the balls from turning only when desired.[1] By methods similar to the above, large numbers of golf balls are coated and recoated. The wood-enamel formula given above has been very satisfactory for this class of work. The strength of the shellac and pyroxylin gives to them excellent wearing qualities. See "Golf Balls," Chapter XIV.

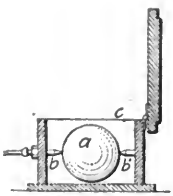

Fig. 88.—The Hammond Method of Lacquering Golf Balls.

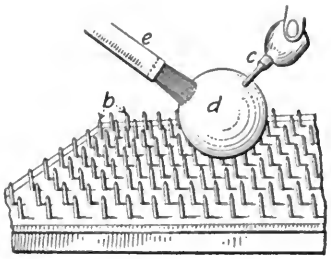

Fig. 89.—Lacquering Golf Balls According to Armitage.

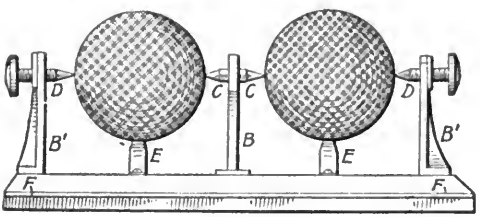

Fig. 90.—The Page Method of Lacquering Golf Balls.

Lacquering Billiard Balls. According to the patented process of E. Roese[2] the ball is first coated with an alcoholic solution of copal, which is followed with a pyroxylin lacquer. The solutions are to be thin, and several coats applied. It has never been found possible, in coating billiard balls, to so evenly apply and dry the solution that a slight ridge and unevenness are not noticeable. Coating in this manner, therefore, has been restricted to the more inexpensive balls.[3]

1. The arrangement may be made single instead of double, the pivots arranged vertically instead of horizontally, or sliding-spring pivots substituted for the screw ones. See also C. H. Gray, E.P. 20253, 1901.

2. E.P. 5413, 1886.

3. Where large areas are to be coated, the mechanical painting device of H. v. Moliter, E.P. 9828, 1904, saves much time. It consists, Fig. 91, of a case *a*, fitted with a reservoir *d*, an exchangeable brush *b*, and a suitable handle. The wood, which is fixed to the case by screws *c*, is provided with holes b^2. Liquid is supplied to the brush by loosening the winged screws *i*, and therefore opening the lateral outlets of the reservoir and loosening the tightening band *e*, and so allowing the liquid to pass between the taper a^2 and the flange d^4. See also E.P. 8728, 1901.

Pyroxylin Floor Lacquers. A durable and efficient floor lacquer, and one which when correctly applied will not show nail marks or chip on severe usage, may be made by varying the proportions of the constituents in a pyroxylin shellac lacquer. The following formula has been found satisfactory:

Pyroxylin	12
Wax-free shellac	26
Amyl acetate	20
Acetone	10
Refined fusel oil	12
Wood alcohol, 97%	35

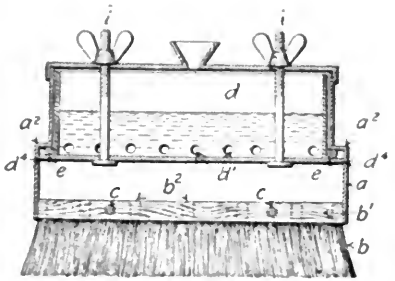

FIG. 91.—The Moliter Mechanical Painting Device.

The preparation is intended for hard-wood floors only, no lacquer being satisfactory where the wood is too soft to give a sufficiently hard background for the solution to adhere properly. It is applied undiluted with a flat brush, the brush marks being allowed to flow out, for the slow-evaporating solvents, as will be noted, are present in sufficient amounts to cause the lacquer to readily flow out smoothly. For floors subjected to hard treatment three coats are necessary, and a day should intervene between applying each coat. Although the lacquer sets in a few minutes, it does not become thoroughly hardened for several hours afterwards. It is a somewhat expensive, although meritorious preparation. In the use of pyroxylin solutions for wood fillers, or for laying the grain of wood, it is the property of the contraction of the pyroxylin film that is especially operative and desirable.

Imitating Mahogany, Rosewood, Cocabola, and Ebony with Pyroxylin Lacquers. In order to stain wood in imitation of mahogony, rosewood, etc., the surface of the wood is first given a filling coat of a shellac-fusel oil lacquer, and when this is dry, the stain dissolved in wood alcohol, is applied by means of painting over a stenciled pattern. Then, without awaiting for the pattern to harden, a

transparent pyroxylin-shellac lacquer is flowed over the surface. If the wood alcohol solution is allowed to dry, a small amount (2–3 oz.) of pyroxylin should be added to it to harden the surface of the stenciled pattern. After drying, a heavy pyroxylin lacquer is flowed over, which causes the pattern to run slightly and blur, the shades blending into each other, thus heightening the natural effect.

Pyroxylin and Copal. In general the pyroxylin-copal lacquers are used for the same class of work as shellac and pyroxylin, but for coverings where inferior hardness and appearance will do. As far back as 1874 D. D. Smith [1] devised a process for the manufacture of artificial coral, which consisted in mixing "soluble-cotton" 24, copal 5, alcohol 10, stannous chloride 0.05, shellac 1, ether 20, gold chloride 0.025, magnesium oxide 1, and stannic chloride 0.05. The inorganic portion was mixed with the soluble cotton and shellac dissolved in the alcohol-ether, and molded in suitable shapes. With unimportant modifications, much of the artificial coral produced at the present time is manufactured in this manner, the inorganic salts, however, being replaced by pigments and dyestuffs.

J. Bonnaud [2] has proposed to combine castor oil in a copal-pyroxylin formula the oil aiding in the elasticity of the lacquer.[3]

Welsbach Mantles. Copal and pyroxylin are extensively used in the United States as a stiffening agent in the manufacture of Welsbach and other gas mantles. The body of the mantle, known technically as the stocking, is woven many feet in length in a hose or stocking machine (Fig. 95), after which it is washed free from impurities, especially lime.[4] After cutting the hose into lengths suitable for individual mantles, they are dipped into solutions of the rare earth metals, to the presence of which their high incandescence is due, and then centrifuged.[5] The moist stockings are then stretched on wooden frames, and allowed to dry at a moderate heat. After drying the top is constricted, an asbestos or platinum ring inserted, to which the top is sewn by means of asbestos thread. After placing in a wooden frame and stretched or "modeled" to give a uniform and symmetrical shape, the mantle is ready for the "heat treatment." First the cotton is burned off, by simply igniting the mantle and allowing the mass to burn, which leaves a collapsed skeleton of the rare earth

1. U.S.P. 150722, 1874. 2. E.P. 8063, 1901.

3. See U.S.P. 697790, 1901; W. Still and A. Adamson, E.P. 25549, 1908; C. Bagrachow, E.P. 5598, 1909.

4. Calcium forms insoluble precipitates with some of the rare earths.

5. Great pains must be exercised in wringing out the excess of solution from the stocking, so that the desired amount will remain, and it will be evenly distributed throughout. The squeezing rollers are movable to allow of adjustment, and the rare earth solution is brought to a definite concentration.

oxides. By placing this over a "shaping" flame, much hotter than the first, the collapsed mantle is expanded or blown out to its original shape.[1] It is next passed through a "hardening" flame at a still more elevated temperature, being moved continually backward and

FIG. 92.—Drying Incandescent Mantles after being Shrunk on the Models (Figs. 92–95 inclusive, are from the Scientific American).

forward for 2–4 minutes. The mantle is then carefully dipped (Fig. 92–95) in a pyroxylin copal lacquer, of which the following is an acceptable formula:

Pyroxylin	8
Kauri copal	14
Acetone	40
Wood alcohol, 97%	25
Amyl acetate	10
Refined fusel oil	5
Benzine, 71°	44

1. This portion of the process is almost momentary.

If a tendency to distort or wrinkle the mantle is noticeable, the lower boiling-point solvents may be decreased, or a small amount (2–4) of

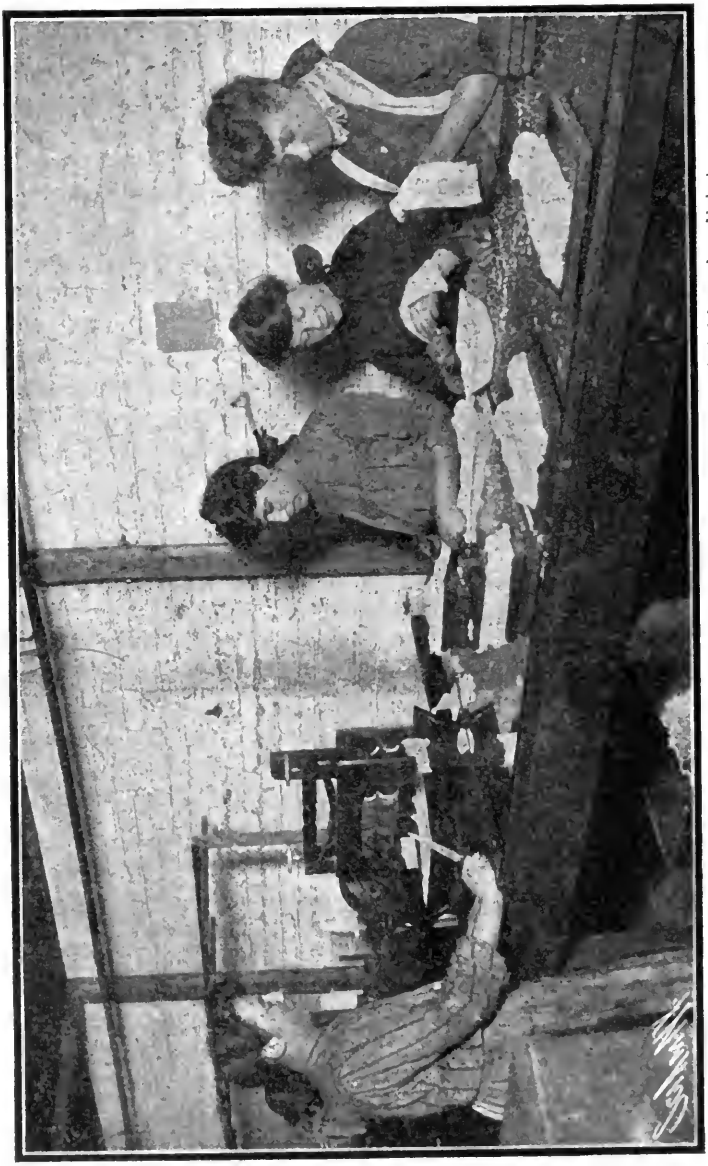

Fig. 93.—Cutting the Mantels into Proper Lengths before Shrinking the Fabric.

castor oil added, camphor being formerly used for this purpose. If the mantle dries too quickly, the amyl acetate and fusel oil is increased,

and if too slowly, the opposite is indicated. The mantle is suspended by a cord during immersion, and but one coat is required. If the "dip," as the lacquer is called, becomes too thick, wood alcohol 97% is usually added as a thinner. It is customary to allow lacquers intended for mantle dipping to either clarify by long standing or by paper filtration under pressure. If clarified by standing, filtration through cheesecloth is necessary to free the solution from small bits

FIG. 94.—Apparatus for Immersing the Mantles in the Pyroxylin Solution.

of wood and bark introduced with the copal. In burning off just before use, if the mantle ignites too freely, and burns too quickly, a retarding agent as paraffin may be added to the lacquer. Those mantles which leave a deposit on ignition or which turn the mantle dark usually contain an excess of paraffin, a pyroxylin copal solution igniting without carbonaceous residue. After dipping, the mantles

are hung up to dry, trimmed and packed.[1] In the J. Bouillier process,[2] the mantle is first swelled by the action of formic or acetic acids on the pyroxylin, the impregnation with mineral salts taking place in the swollen condition.

In the recent R. Eisenmann method[3] the camphor or castor oil usually present in the immersion bath in conjunction with pyroxylin

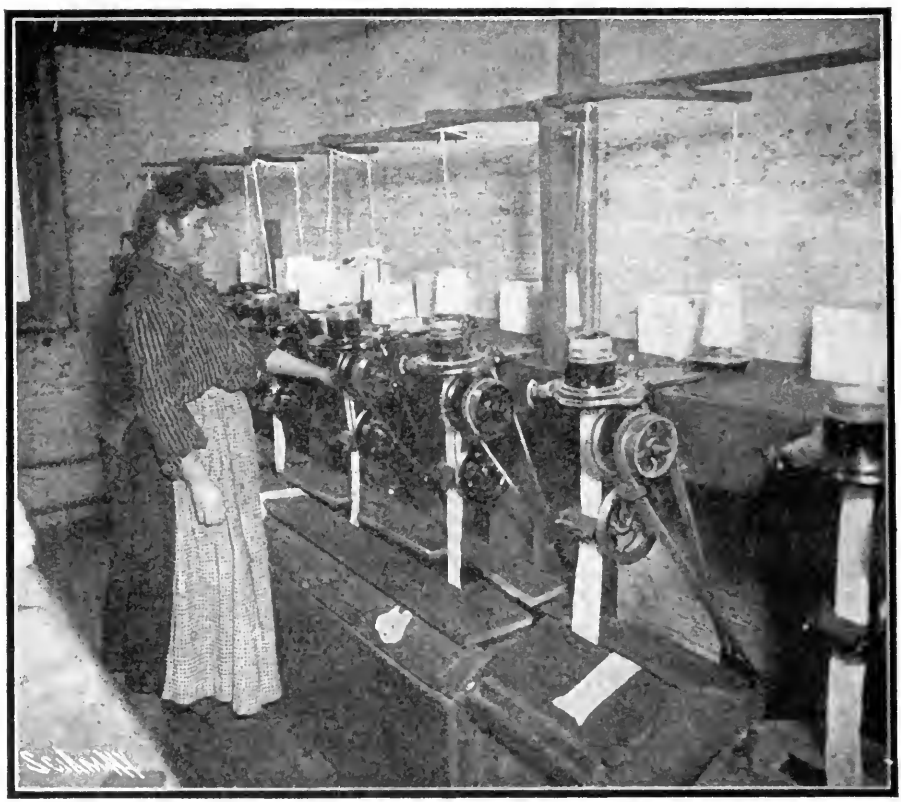

FIG. 95.—Forming the Fabric for the Mantles.

and intended to minimize wrinkling is replaced by aromatic nitrocompounds (nitrobenzene, mono- or di-nitrotoluene, nitronaphthalin), compound esters or substituted amides or ketones. These compounds are much less expensive than camphor, and it is claimed equally as efficient.

1. See E.P. 3509, 1906; O. Wiederhold, U.S.P. 811017, 1906; R. Schoder, E.P. 7330, 1897.

2. U.S.P. 811849, 1907.

3. E.P. 15536, 1907; Eisenmann and J. Bendix, E.P. 15696, 1903; F.P. 333824, 1903.

Cerofirm.[1] A new mantle under this name has been placed on the market quite recently, the base of which is an artificial silk of cellulose nitrate and acetate. It is claimed that the non-inflammability of the cellulose acetate modifies the combustion of the mantle on ignition to the proper extent. In the production of filaments for electric lamps O. Swete and W. Main [2] claim the use of a vegetable fiber, preferably that known as Mexican fiber, which is thickened to the desired extent by repeated immersion in an ether-alcohol pyroxylin solution. After coating, the fiber is reduced to a uniform cross-section by means of a drawplate, and then carbonized. It is claimed such filaments are unusually free from brittleness.

According to Cross and Bevan [3] it has been found that artificial cellulose fibers, as those of nitrocellulose, can be spun from solutions containing considerable amounts of salts of the rare earths, and that when such fibers are knitted and ignited, leave a coherent inorganic skeleton of the oxides of homogeneous structure and smooth contour. De Mare in 1894, and O. Knöfler in 1895,[4] patented methods for the preparation of such threads containing the salts of thorium and cerium, by spinning a cellulose nitrate containing the salts in solution. After ignition, and brought into the form of a mantle, it is stated that a much more durable structure results than with the original Welsbach mantle. The points of superiority as indicated by V. H. Lewis are as follows: "The alteration in physical structure has a most extraordinary effect upon the light-giving life of the mantle, and also on its strength, as after burning for a few hundred hours the constant bombardment of the mantle by dust particles drawn up by the rush of air in the chimney causes the formation of silicates on the surface of the mantle owing to the silica being present in the air, and this seems to affect the Welsbach structure far more than it does the Clamond type, with the result that when burned continuously, the Welsbach mantle falls to so low a pitch of light emissivity after 500–600 hours, as to be a mere shadow of its former self, giving not over one-third of its original light, whilst the Knöfler mantle keeps up its light-emitting power to a much greater extent, and the Lehner fabric is the most remarkable of all. Two Lehner mantles which have been burning continuously in my laboratory for over 3,000 hours give at this moment a brighter light emissivity than most of the Welsbachs do in their prime. . . The new developments of the Clamond

1. Jour. Gas Lighting, 97, 211.
2. E.P. 6167, 1886; abst. J.S.C.I., 1886, 5, 500.
3. "Researches," 1900, 14.
4. E.P. 11038, 1895; abst. J.S.C.I., 1895, 14, 797.

process form as important a step in the history of incandescent gas lighting as the discoveries which gave rise to the original mantles."

Acetic Collodion. Glacial acetic acid, and in fact all strengths of acetic acid above 85%, are good solvents of pyroxylin. Another method of stiffening mantles is by dipping in such a solution, the pyroxylin content ranging from 12–15 ounces. Acetic acid produces a thin-flowing lacquer, so that the large amount of pyroxylin mentioned is possible. The advantages of such a solution are that in preparing, no preliminary clarification is necessary, there being but a trifling residue from an acetic-acid solution. 90–95% absolute acetic acid is the most satisfactory working strength. It appears that acetic acid pyroxylin is more penetrative in the interstices of the mantle than is a lacquer, and dries more uniformly, there being but a single solvent. Paraffin cannot be added, being insoluble in the acid, but gelatin or glue, difficultly inflammable and readily dissolved in acetic acid, may advantageously replace it, and materially reduces the speed of ignition. This method has been patented in France by A. M. Plaissetty,[1] who afterwards spins the glacial acetic acid solution into threads, the acid being capable of holding the incandescent salts in solution. Formic acid is but an imperfect solvent for pyroxylin, although a mixture of equal volumes formic and propionic acids is stated to be the equal of acetic acid in solvent power.

Chemical Examination of Pyroxylin Lacquers. The accurate commercial analysis of a pyroxylin-resin lacquer is an impossibility as indicating the original constituents and the proportions in which they were introduced, on account of the varying composition of the refined fusel oil used, and the amount of amyl and other acetates present in the commercial amyl acetate used. On the assumption that the lacquer is limited in complexity to the three solids—resin, pyroxylin and pigment, and to the four liquids—amyl acetate, amyl alcohol, wood alcohol and benzine, the following outline has been found sufficiently satisfactory for commercial work or for purposes of duplication. From one portion of the sample the three solids and amyl acetate are determined as follows:

Amyl Acetate. Place 100 cc. lacquer in an Erlenmeyer flask, add 200 cc. amyl alcohol in small portions and with much shaking, and when the precipitated pyroxylin has settled in a coherent, gelatinous mass, 50 cc. of the clear supernatant liquid is removed with a pipette. A portion of this liquid is saponified and the amyl acetate determined

1. E.P. 26381, 1897; 3770, 1898; 63, 1899; 9088, 1900; 20747, 1901; F.P. 321803, 1902; U.S.P. 768073, 1904; abst. J.S.C.I., 1899, **18**, 479, 746; 1901, **20**, 699; 1902, **21**, 1389; 1903, **22**, 547; 1904, **23**, 897; See also W. Mackean, E.P. 3493, 1898; 12077, 1899.

as given in Chapter VI, the apparent result being multiplied by 6 to give the real per cent of acetic acid to be calculated into amyl acetate.

Resin. The remaining liquid and precipitate is placed on a counterpoised "ash free" filter paper, washed with hot amyl alcohol until no solid residue is extracted, the filtrate made up to 250 cc. and after cooling, 150 cc. evaporated to dryness in a tared capsule. The weight obtained, multiplied by 2, gives the per cent of resin by weight in the lacquer by volume. The nature of the resin may be determined from an examination of the dried residue as laid down in works on resin analysis.

Pyroxylin. The precipitate on the filter paper, now resin free, is washed with a mixture of equal volumes of acetone and amyl acetate until nothing further is dissolved. The filtrate evaporated to dryness at 105° gives the percentage of pyroxylin by weight in the lacquer by volume.

Pigment. The residue remaining on the filter paper, when dried at 105°, deducting the weight of the counterpoise, gives the percentage of pigment present. The pigment may be ignited if desired, or the pigment and pyroxylin may be ignited after the addition of a small amount of paraffin to the crucible before igniting, to lessen liability of spurting from too rapid combustion; and the weight obtained, subtracted from the combined weight of pyroxylin-pigment precipitate dried at 105°, gives the pyroxylin present, it being assumed that the ignition of the pigment does not reduce the weight of the latter. The composition of the pigment may be obtained in the ordinary qualitative manner, and the pyroxylin may be further examined by a nitrogen estimation and a determination of viscosity of a given weight of the dry ester.

Benzine. 50 cc. original sample is placed in a graduated cylinder, to which 75 cc. concentrated sulphuric acid is added. This is vigorously shaken and the contents left at rest for several hours, when the benzine will form a colorless or light yellow layer at the top, each cc. representing 2% benzine.

Wood Alcohol. 100 cc. original sample placed in a fractionation flask and distilled at a temperature not to exceed 75°, will give a distillate, each cc. of which represents 1% wood alcohol in the original sample.

Fusel Oil. On account of the widely varying composition of rectified fusel oil, it is usual to determine this by difference, there being no indications of the presence of other solvents. The above-named constituents cover the formulas of the majority of the lacquers of the present time.

CHAPTER XI

IMITATION LEATHER AND FUR. THE WATERPROOFING OF TEXTILES

Numerous processes have been devised, products patented, and formulas published for the production of waterproofing compositions for textiles and paper, and the manufacture of imitations and substitutes for leather and fur, the majority of which, it may be conservatively stated, have never passed beyond the experimental stage. This, no doubt, has partly been due to the fact that the inventors were unfamiliar with the requirements of the trade, and produced processes which, therefore, were not commercially feasible or could not be worked at a satisfactory profit; on the other hand the small minority which have stood the test of time are to-day successfully competing with natural leather and fur, especially the former, for a large number of the uses to which they are applied. The imitations of leather, which are by far the more important, may be divided into those substitutes which do and which do not contain leather in their composition, and of the latter class, a second subdivision into pyroxylin-free, and pyroxylin-containing leathers may not be out of place.

Artificial Leathers Containing Leather. These preparations consist of refuse leather made from trimmings, fleshings obtained from hides and other waste pieces, either reduced to a pulp and pressed in molds hydraulically,[1] or disintegrated and sifted,[2] after which they are molded, pressed or wound into suitable shapes, being generally waterproofed by a subsequent treatment. The earlier of these preparations comprised glue, starch, tar, waxes and adhesives, and invariably included water-repellent ingredients as aids in the waterproofing effect. In 1864[3] E. Bouveyer took out a patent for reducing leather scraps to powder, mixing with india-rubber, drying by heat and immersion in a bath of carbon bisulphide. In 1877, Smith and Johnston[4]

1. Method of C. Cole, E.P. 3027, 1857.
2. Method of E. Tuteur and W. J. Goulbourne, E.P. 3027, 1887. After sifting, the leather was mixed with marine glue dissolved in naphtha for making boot soles, cricket balls, cornices, telephone boxes and knife handles.
3. E.P. 1001, 1864; also W. Burr, E.P. 689, 1869.
4. The refuse was digested with sulphuric acid previous to mixing.

perfected a process for the production of an artificial leather which consisted in mixing leather refuse and chips with paper, rags, sulphuric acid and fusel oil, with beeswax, to impart flexibility, and oak bark to simulate the natural color of the leather. It was used primarily for *papier maché*. The subsequent processes of Gillot,[1] Tice,[2] Stanley,[3] Davies,[4] Burrows,[5] Arnold,[6] Weygang,[7] Hartmann,[8] Baldwin[9] and Gautier[10] indicate the successive steps in the progress of this branch of the art. As leather became more valuable from advanced methods of tanning, the value of scraps and small pieces became more apparent, and more time and thought were given to their profitable utilization.

Pyroxylin and Leather-Free Artificial Leathers. The leather-free artificial leathers embrace a wide but relatively unimportant class. Various products have from time to time been proposed as substitutes for real leather, in imitation of morocco and other leather for bookbinding, military accoutrements, harness, etc. They have invariably been prepared by coating or otherwise treating fabrics. The first patented process, that by Green taken out in 1856,[11] depended upon coating fabrics with glutinous and gelatinous compounds combined with various resins, and treated with aluminum acetate or tannin to render the coating insoluble and impervious to moisture. Rowley[12] selected a felted or woven fabric which was coated on both sides with

1. T. F. Gillot, E.P. 1746, 1866, used fleshings obtained from hides, which were tanned, stretched, dried, cemented and pressed together to form a waterproof sheet of any desired thickness, the cement consisting of shellac and linseed oil, or ordinary collodion with gutta percha. J. Kendall and R. Trested (U.S.P. 86841, 1869) coated fabrics for the manufacture of hats and bonnets by means of French zinc or equivalent, lead, oil and collodion.

2. W. Tice, E.P. 2275, 1875, hide cuttings being reduced to a pulp, and shaped in molds by heat and pressure to form loom pickers, picking sticks, shuttles, Jacquard cylinders and other appliances used in spinning and weaving.

3. J. Stanley and T. F. Lemassena, E.P. 3141, 1884, where leather scraps are pasted and wrapped on a mandrel or molded for collars, saddles and other articles of harness.

4. J. W. Davies, E.P. 11880, 1885. Leather waste is fed into a suitable disintegrator, pulverized, sifted, and mixed with glue.

5. W. A. Burrows, E.P. 14235, 1888, where leather scraps are shredded or flocked, and mixed with glue and alum, or silicates, borax, acetic, citric, tartaric or oxalic acids.

6. A. E. Arnold, E.P. 4608, 1888.

7. C. Weygang, E.P. 3004, 1890, characterized by agglutinating leather scraps with resinous size, or rendered rot-proof and antiseptic by addition of phenol.

8. F. Hartmann, E.P. 14697, 1894, where undressed and untanned skins are submitted to action of wet steam to convert partially into glue, then turpentine added until saturated, dried and pressed.

9. A. H. Baldwin, E.P. 21668, 1895, scraps of buff leather being soaked in water and crushed into pulp between fluted rollers, beaten, treated with size and pressed.

10. G. Gautier, E.P. 19249, 1901. Waste portions of untanned hides are washed, sprayed with cold water, ground, and zinc sulphate and formol added. See also R. Weeber, U.S.P. 927198, 1909; Fiber Producto Company, E.P. 4130, 1909; L. Guilleteau-Chaput, U.S.P. 933645, 1909.

11. W. Green, E.P. 1862, 1856.

12. J. Rowley, E.P. 1652, 1856.

China clay mixed with albumen, after which a naphtha solution of gutta-percha was applied, and rolled between heated cylinders. Bousfield [1] vulcanized india-rubber with fibers of cotton or flax. Abate [2] coated cloth with linseed oil, baked, pumiced and varnished with a resin lacquer. Horwitz [3] impregnated dried animal and vegetable matter with linseed oil, added glycerin to render more flexible, and, in order to further waterproof the surrogate, a top coat of boiled hemp oil was applied. "Leatherine" [4] depended upon calico coated with rubber and rubber substitute to make the imitation effective. "Leatherboard" is prepared [5] by pulping fibrous material of various sorts, rendered absorbent by the addition of powdered chalk or whiting, and then molded into forms or pressed into sheets, when a glazing solution [6] is applied. "Leatheroid" is a combination of chemically treated paper with rubber and sandarac.[7] Clark [8] takes the down from the flowers and seeds of bulrushes, milkweed and reeds, and makes into a paste with gelatin, while seaweed,[9] cork,[10] esparto grass,[11] vegetable excresences,[12] wood pulp,[13] wool, fur and jute,[14] cardboard,[15] lambs wool,[16] cork,[17] and yarn [18] are some of the materials upon which processes have been based. "Texol" was intended for covering walls [19] and for bookbinding, and consists of a compound of caoutchouc, oxidized linseed oil, cocoa fiber, ochres and waste, filaments of hemp, jute and other fibers spread out in a thin layer on a paper backing. "Textiloid" [20] has for its base products obtained by the saponification and oxida-

1. G. T. Bousfield, E.P. 1756, 1856.
2. E.P. 1908, 1857.
3. D.R.P. 17677, 1881.
4. E.P. 3171, 1884.
5. H. R. Minns, E.P. 2224, 1894.
6. Composed of starch, gelatin and turpentine. See W. G. Jones, E.P. 6507, 1901.
7. The material is pressed in heavy sheets and used for trunks and suit cases.
8. W. Clark, E.P. 1403, 1862.
9. Process of G. Laureau, E.P. 6988, 1894.
10. G. E. Block, E.P. 718, 1875.
11. A. J. Boult, E.P. 5762, 1897, the grass being plaited into strands, and glued together between surface coatings of woven fabric or leather.
12. E. Golonya, E.P. 15217, 1884. These, known in Hungary as "taplo," "spongiolignine," or "fungiformis," are immersed in an albuminous bath, dried and rolled.
13. J. Noad, E.P. 1750, 1876, the pulp being mixed with fusel oil in combination with gummy or resinous substances and siliceous compounds.
14. W. Travis, E.P. 5191, 1884.
15. Göppinger Papier-fabrik, Kreem, D.R.P. 6802, 1893.
16. E. Kingscote, E.P. 10432, 1898. The wool is chrome-tanned after felting, and afterwards impregnated with a heavy solution of a low nitrated cotton or nitrated castor or linseed oil.
17. J. Phillips, H. Lebel, and R. Grimoin-Sanson, E.P. 14420, 1901, who secured extremely thin sheets of cork to a backing of woven fabric, usually linen, and employed for imitation linen or morocco. The patent (E.P. 17270, 1903) of J. Philipp and P. de Troussures, rendered the cork more supple and homogeneous by soaking for some time in a mixture of 90 parts turpentine, 8 alcohol, and 2 of ether, and then uniting with a fabric by high pressure.
18. G. Murray, E.P. 1930, 1904.
19. A. Hutchinson, E.P. 3749, 1882.
20. E. Cadoret, E.P. 12451, 1896.

tion of oils, the so-called "resinolines."[1] "Kerite"[2] was prepared by boiling cottonseed or other vegetable oils with antimony pentasulphide, or zinc, iron, lead or copper sulphides, either with[3] or without[4] vegetable astringents as tannin or sumac. It was considered by the inventor as more applicable for insulation purposes, the compound possessing the capacity to withstand destructive agencies. This is practically the same as "cuirette,"[5] which, however, was pressed into slabs and used as leatherboard. Up to this point the question of pliability had apparently been overlooked by the majority of investigators in this field, until Brigalent[6] introduced "fibroleum," a product resulting from the alkaline digestion of animal refuse whereby the glue substances were dissolved and the tissue separated. The latter was worked up in a manner similar to paper pulp, impregnated with glycerol, hydraulically pressed, after which it "possessed an elasticity as lasting as original leather." It is apparent, however, that the product was not waterproof.[7]

Pyroxylin-Containing Artificial Leathers. As the acceptation of the term "artificial leather" more correctly embraces only products in which leather in some form enters, its application to pyroxylin solutions and cellulose-nitrate waterproofing compositions is, strictly speaking, a misnomer. In the early fifties of the past century[8] Louis Cornides attempted to apply pyroxylin compounds to cloth and paper with the object of forming waterproof fabrics useful in themselves, and also for the manufacture of various articles of trade. He said: "For saturating and coating or covering leather, paper and textile fabrics, I employ a solution of explosive cotton in wood spirit or pyroxylic spirit or alcoholized ether, and in some instances I combine therewith india-rubber, gums, resins, bitumen, drying oils, colors and tan."

N. E. T. Petin[9] added to the durability of the completed fabric by using metallic cloth or wire gauze, which was coated with a mixture of collodion, caoutchouc, and copal, and used for sword cases, helmets, and saddlery. The same year (1856) Berard[10] outlined his process of com-

1. To obtain the above, an oil is saponified by a metallic carbonate which is decomposed by nitric acid, the mixture being constantly stirred. The supernatant liquid is decanted and saturated with an alkali. On cooling, the soap takes a color which is determined by the oil employed, and, when treated with suitable acid, the resinoid body is set free and may be purified by dissolving in alcohol and evaporating the solution.

2. U.S.P. 210411, 1878; E.P. 36, 1878; 8787, 1885; all to Austin Day.

3. E.P. 8787, 1885. 4. U.S.P. 322802, 322803, 322805, 1885.

5. E.P. 8626, 1885. 6. Das Handelmuseum, 1900, 26.

7. The artificial leather of Gautier, U.S.P. 736957, of rawhide softened with lime and mixed with chromic oxide and zinc sulphate, of Case U.S.P. 776453, which consisted in impregnating leather scrap with wax, offer but little that is new.

8. E.P. 745, 1855. 9. E.P. 1765, 1855. 10. E.P. 607, 1856.

bining two fabrics by means of a collodion coating, and adding to the water-resisting effect by varnishing both sides of the pyroxylin-coated cloth. Instead of impregnating the fabric with pyroxylin solutions, Rollason [1] attached a pyroxylin film.[2] He said:

"I dissolve pyroxylin in any of its known solvents, producing collodion, and to this solution add vegetable oil—by preference, castor oil. This solution I put upon the smooth plates of metal and allow the spirit to evaporate. If I intend to employ the tissues as a coating for woven fabrics, as silk, I lay the silk upon the tissue and roll between rollers and then remove the silk from the plate. The same applies to paper or any other fabric. Or, after removing the tissue from the plate, I can place it between two pieces of woven fabric and inclose it by pressure." Rollason in English Specification No. 2143 of 1864, protected fabrics by two dissimilar coatings, and said: "I take collodion either alone or in combination with a suitable gum, such as anime or balsam of anise seed, and oils as linseed, nut or castor, and having poured or otherwise placed the same onto a polished surface as glass, I allow it to become quite dry. Upon this collodion or its compounds when dry, I brush or pour a cement of gum arabic, dextrin, or of a nature similar to these, upon which again, when sufficiently dry, I place my painting or other material."

Lewthwaite [3] utilized the patented product of A. Parkes (called Parkesine) by ornamenting, embossing, and printing, and treated it in a manner similar to real leather. He prepared various thicknesses and of dissimilar material, as with sheets of collodion alternating with sheets of nitrated paper or ordinary paper or cloth.[4] In a subsequent

1. E.P. 2749, 1858.

2. See also the processes as indicated in the following English Patents: A. Parkes, 1695, 1867; F. Walton, 2489, 1868; W. F. Jack and F. Greening, 718, 1879; M. Zingler, 3171, 1884; H. Schwabacher, 14587, 1884; H. Schmiedel, 8215, 1895; A. A. Blandy, 13864, 1890; J. B. Ker, 8069, 1896; F. Billing and A. Letalle, 22965, 1896; G. S. and C. Falkenstein, 3062, 1901; and F. Reddaway, 15545, 1902. Alexander Parkes, E.P. 2358 of 1855, also applied waterproofing solutions of pyroxylin in various ways. In describing his method he says: "I use the collodion or guncotton alone or with resins that will set transparent with it, and this is applicable as a coating to silk, tinsel articles, other textile cotton fabrics, sewing thread, and other plastic materials. I also use other metallic agents or coloring bronzes with solutions of guncotton for waterproofing, which may be prepared alone in sheets or admixed with india-rubber solutions with advantage. I spread the preparation in any well-known manner until a deposit of the required thickness is obtained. If the plates or sheets are to be colored, the liquid composition is flowed onto glass plates colored or etched to give the desired effect. To strengthen the sheet, a solution of gutta percha purified as described in my E.P. Mar. 25, 1846, is applied, one coat being allowed to entirely dry before the other is brushed on. Thick sheets of a compound nature may be formed by cementing several sheets together, which like alternating sheets of collodion and gutta percha may be of dissimilar structure."

3. E.P. 741, 1868.

4. See also U.S.P. 103209, 1870.

process [1] Parkesine, in combination with wire gauze, was used for the manufacture of machine driving-belts and other heavy leather materials, and was made by passing cloth under a spreading knife, which deposited the Parkesine in a fluid form.[2] Unlike the artificial leather of the present day, the product of this inventor comprised two pieces of cloth, cemented together with the pyroxylin coating. It had quite an extensive use as a covering material for library, billiard and card tables.

In 1884 [3] Wilson and Story published their method of coating cloth with a pyroxylin-amyl acetate mixture combined with castor oil, which was the forerunner of the present-day formulas. They realized and clearly set forth the uses of the individual materials comprising the product and pointed out the value of castor oil in increasing suppleness of the coated cloth, their "leather cloth" as it was termed, was undoubtedly the first commercially successful product of this nature produced in England. All the compositions suggested up to this point had consisted of textiles coated with pyroxylin, but they lacked that pliability which is present in so noticeable a degree in leather, and the absence of which prevented serious competition of the artificial with the real skin. Their leather dressing composition [4] consisting of amyl acetate, amyl alcohol and pyroxylin, and which received protection in 1885, was one of the more important steps which have contributed to place this industry on the firm footing upon which it rests to-day. Of the numerous difficulties which up to this time had met the inventor, one of the most important arose from the inability to produce a flexible coating, which at the same time would have the requisite strength, a non-adhesive surface and extreme pliability. As a rule, flexible solutions, though adhesive, attract dust and dirt removable with difficulty, or they allow objects which come in contact with them to adhere. If on the other hand the preparation used was sufficiently hard to be non-adhesive, or the requisite smoothness, it was found to be too stiff for bending into shapes without liability of cracking, as when corner articles were covered with the fabric. Investigators subsequent to Wilson and Story evidently centered their attention toward producing flexibility and strength. W. Green [5] first rendered the cloth waterproof with india-rubber solution, upon which was squirted a nitrocellulose fluid, this being followed by a solution of pyroxylin rich in castor oil. DuVivier,[6] in connection with his artificial silk experiments, evolved a process for preparing

1. J. Lewthwaite, E.P. 1433, 1882.
2. E.P. 741, 1868.
3. E.P. 6051, 1884.
4. E.P. 491, 1885.
5. E.P. 9879, 1889.
6. E.P. 2570, 1889.

a flexible coating resembling leather, by dissolving "trinitrocellulose" in glacial acetic acid. F. Greening [1] prepared the cotton after nitration by a special treatment consisting of washing with aluminum sulphate solution. A. Nobel [2] sought to obtain the desired results by the use of certain solvents, among which are mentioned the chloro-, bromo-, chloronitro, or bromonitro aromatic compounds, and the ethereal salts of certain fatty or aromatic acids, or the nitrophenols, the nitrocellulose being dissolved in one or more of the above, and applied to cloth in the usual manner. Hagelberg [3] followed with a process for attaching thin and very flexible sheets of celluloid to cloth, and then flowing a thin celluloid solution over the attached sheets. It was found, however, that the attached sheets were prone to come off in use, and the process never passed the experimental stage. The Soc. Petticolin in 1901 [4] obtained results of wide interest in their attempts to duplicate woolen, felt and flannel goods. Stamped sheets of celluloid were coated with wool shearings or wool dust, the sheet being first soaked with pyroxylin adhesive, and then immersed or rolled in the wool shearings or dust, the excess being mechanically removed. It has been stated that the coated material had considerable sale in France and Germany. In 1904 R. Piesbergen [5] devised a plastic composition which becomes hard when cold, and yet retains considerable plasticity and resiliency, consisting of tanned animal albumen, particularly skin gelatin, glycerol, fatty oils such as castor, olive or saponified poppy-seed, encased in a skin of pyroxylin. The thin collodion film was prepared by allowing a transparent or dyed lacquer to dry on a surface of glass, on which a uniform layer of warm gelatin is spread and permitted to cool. Any surplus of water having been removed, a second pyroxylin film is applied, the gelatin being entirely encased. While the materials are still in the plastic condition, the sheet is pressed between soft cloth to give the appearance of real leather, and rolled to a suitable thickness. The sheets are then immersed in a tanning solution such as formaldehyde, chrome alum, tannin or the like; or the tannin solution may be added to the gelatin just before the upper pyroxylin coat is affixed. Reagles sought to impart great flexibility with large amounts of camphor,[6] while Sutherland added both camphor and castor oil,[7] and used considerable quantities of methyl acetate. The latter formula, combined with a properly nitrated cellulose, and

1. E.P. 22019, 1894. 2. E.P. 15914, 1894. 3. E.P. 25809, 1896.
4. E.P. 4369, 1901. 5. E.P. 15629, 1904. 6. U.S.P. 311203, 1885.
7. E.P. 28613, 1897; the Schuhfabrik Bonndorf Geb. Kriechle (E.P. 12174, 1908) manufacture a leather substitute by repeatedly applying a thick solution of celluloid to a fabric and applying pressure after each application; see also Blum, F.P. 392270, 1907; G. Torci, F.P. 407654, 1909.

applied with mechanical equipment of high efficiency, ought to produce a product of considerable commercial value.

Artificial Pyroxylin Leather in the United States. Previous to the work of Stevens on amyl acetate, attempts to produce satisfactory imitation leather were confined almost exclusively to the attachment of pyroxylin films on backings of various textiles. It was found, however, that the attachment of the dried film to the cloth was not firm, and that it required first a fluid preparation to penetrate the fibers of the cloth as a firm anchorage before a dried film would adhere strongly enough. All processes prior to 1888 are of but historical interest, and none have survived to the present time.

Hale and Crane in their work on the pyroxylin lacquers endeavored to produce satisfactory substitutes for leather, but at first were apparently unable to overcome the obstacles of their predecessors. As the result of investigations on blown and sulphurated oils by their chemist, W. D. Field, the Crane Company in 1890 formed the Tannette Manufacturing Company, and commenced at Springfield, N. J., the production of considerable quantities of an entirely new artificial leather, to which the name of Tannette was given. This product consisted of cloth, on one side of which was spread an opaque, heavy pyroxylin compound, containing no leather, but possessing the desirable qualities of real leather in a degree not attained before that time. The solvent was composed of amyl acetate, refined fusel oil and benzine. As in their first manufacture of pyroxylin lacquers, secrecy in the composition and methods of producing the coating was attempted, but a vegetable oil blown with sulphur was one of the ingredients, and the smell imparted to the finished goods as a result of the presence of this constituent, and the unmistakable odor of hydrogen sulphide which pervaded the neighborhood in the vicinity of their factory while the oil was being blown, together with the interest manifested by the trade and the rapidity with which the demand for the coated cloth increased, compelled the originators to seek patent protection, which they did in United States Application No. 383987, dated March 6, 1891. This resulted in the granting of patent No. 473306 on April 19, of the following year.

According to the original specification in order to produce a compound both "stable and durable, not liable to decompose, oxidize, or evaporate, and also possessing great flexibility and body," Field proposed to use the "sulphur derivatives of the glycyl or glyceryl ethers of unsaturated fatty acids in combination with nitrocellulose." Cottonseed and olive oil were found best adapted to the purpose, while those oils like palm (which contain considerable proportions

of the saturated fatty acids), and the "linseed oil group" of drying oils which when combined with sulphur dry too readily, were found less suitable. The oil was sulphurated by placing it in a kettle and heating to 125°, at which temperature the sulphur, varying from 15–20% of the weight of the oil, was introduced. The temperature was then raised to 210°, which was maintained for two hours, or until the resulting compound was of the proper consistency. This fluidity varied with different oils and according to the purpose to which it was proposed to apply the boiled oil, being usually about as thick as glycerol. If the sulphur was to be added indirectly, as by the use of sulphuric acid, the latter must be added slowly to the oil, not allowing the temperature to rise above 40°.[1] After the addition of all the acid, the mixture was allowed to stand from 12–18 hours, neutralized by repeated washings with cold water, the neutralization being finally completed by the cautious addition of soda. The sulphur derivative was next dissolved out with benzine, and the benzine recovered by distillation, the residue being the finished blown oil, ready to be incorporated with pyroxylin for the preparation of artificial leather. The water-free and neutralized oil is insoluble in methyl, ethyl, propyl, and amyl alcohols and water, but dissolves readily in chloroform, ether, benzene, benzine and amyl acetate.

Continuing Field says: "With this sulphur derivative when cold, I mix pyroxylin, preferably first brought into solution in some solvent which is a solvent for the finished sulphur derivative, in small quantities at a time and with constant stirring, and I regulate the amount of pyroxylin to be added by the degree of flexibility desired in the resulting compound. The greater the amount of pyroxylin in the finished coating composition, the less the flexibility, and conversely. In making coatings for leather and fabrics, I have found the best compounds to consist of three times as much sulphur derivative as pyroxylin. In practice I have found that the addition of more pigment than $\frac{1}{3}$ the weight of pyroxylin is apt to lessen the strength of the coating." Field obtained best results in coating textile fabrics with the following formula: amyl acetate 3 gal., pyroxylin 15 lb., sulphur derivatives 40 lb., and pigment 1–2 lb. It was found in practice that the goods produced from the high sulphur-containing oil developed a disagreeable odor on keeping, or upon tightly rolling up the cloth for any great length of time. The next series of improvements was the gradual reduction of the percentage of sulphur contained in the finished oil, and this sulphur elimination was made possible as the result of actually

1. In a similar manner to the present-day methods of manufacture of alizarin assistant or Turkey red oil.

blowing the oil by forcing a jet of air through the product during the entire period of heating.[1]

With this improved product the patentee says: "I have found the following proportions most useful: blown oil 150 (sp.gr. 0.89), pyroxylin 45, both by weight." The latter was first dissolved in a mixture of 2 parts amyl acetate and 1 part benzine by volume, and the oil incorporated in small portions at a time. The oil and pyroxylin are antagonistic, and each addition of oil tends to precipitate the latter, which is brought back into solution by constant stirring. On account of this antagonism it would be impossible to add the whole of the oil in one portion without materially increasing the volume of the solvent portion of the mixture, which being entirely lost in the subsequent coating operations would considerably increase the cost of the finished cloth. The odor remained the great drawback, and to still further overcome this, sulphur chloride[2] was used, the sulphuration being conducted at 40° or lower, the oil previously being dissolved in benzine, which in turn was distilled off after the reaction had subsided. About 25% sulphur chloride is stated to give the best results. Antimony pentasulphide (golden sulphuret) used so extensively in the rubber industry, and the sulphides of arsenic and tin might prove of value in still further reducing the amount of sulphur required, especially the first-mentioned chemical.[3]

In 1892 the Tannette Company was removed to Bloomfield, N. J., and temporarily discontinued, but later was reorganized at Springfield again with Boston interests, the firm name changed to the Boston Artificial Leather Company, and the product to Moroccoline, since which time the company has continually been in existence. The basis of this product, therefore, is pyroxylin combined with blown oils, and rests upon the patents of Field enumerated above. It has been stated by disinterested experts that the subsequent castor oil-containing artificial leathers do not possess in so high a degree that toughness and flexibility of film as results when blown cottonseed is the vegetable oil used.

A. Kennedy[4] produced a waterproof artificial leather by combining wool fat or lanolin with pyroxylin, and applying with a coating machine in the usual way. Annison[5] first impregnated the cloth with a liquid solution of nitrocellulose to the desired depth, followed by thorough drying. Then one or more coats of a heavier compound

1. Field, U.S.P. 478955, 1892; 491880, 1893; E.P. 3345, 1891; 3469, 1893.
2. U.S.P. 498162, 1893.
3. The present tendency is to eliminate all sulphur-containing compounds as siccatives for the oil, and to blow the cottonseed oil with air alone.
4. U.S.P. 587096, 1897. 5. U.S.P. 602797, 1898.

is placed on this, each coat being further compacted by friction calendering. In this patent, the first concept at embossing in imitation of various patterns and grains appears. Field [1] obtained varying degrees of flexibility by changing the proportions of oil and pyroxylin, while Wood and Stevens [2] "apply successively one or more coats of a solution stiff enough to be non-adhesive," and follow by a coat high in pyroxylin and therefore hard. The elasticity, therefore, comes from the inner coats and the hardness from the outer, flexibility and toughness being thus combined.

The Bradford Dyers' Association [3] have proposed to supplant amyl acetate and the older ether-alcohol solvents used in the preparation of artificial leathers by amyl formate (which see). The unsatisfactory nature of ether-alcohol, on account of the unhealthful and explosive nature of the vapors, and the odor of amyl acetate, which is removable with difficulty from the coated fabric, is not found in amyl formate, according to the experiments of the Association. It leaves no objectionable smell behind, and having a boiling point about 15° lower than the corresponding acetate, last traces of the solvent can be removed from the coated textile with much less difficulty, and with a corresponding diminution in the danger of decreasing the tensile strength of the finished cloth by over-exposure to heat. The amount of solvent, it is claimed, may be reduced, due to the fact that amyl formate makes a more fluid solution than the acetate, the solvent portion not being recovered. A 5% solution is said to give best results. The present market price of formic acid and formates would apparently make the finished cost of the solvent prohibitive in competition with wood alcohol and amyl acetate.

The pyroxylin containing artificial leathers sold under the names of Fabrikoid, Keretol, Marokene, Meers, Chase, and Texaderm, are essentially combinations of castor oil and pyroxylin, with coloring matters added. They are used for upholstery, book binding, carriage and automobile trimmings, and in the cheaper classes of handbags, satchels and dress-suit cases.

The following process of coating in detail may be considered as representative of the more approved methods at present in use in the United States. The general processes of manufacture from the raw cloth to the finished preparation are comprised in the following steps.

1. L.c.

2. U.S.P. 603001, 1898. J. Edson (U.S.P. 289338, 1883) described the first process of practical embossing of pyroxylin-coated textiles and plastics in his method of "treating material with zylonite to resemble pebblegoat, French calf, and alligator leather.

3. E.P. 18742, 1904; U.S.P. 834913, 1908.

Dyeing the Cloth. Formerly the cloth used was purchased dyed of a shade approximately that of the color of the coating composition to be applied. The advantage of dyed over undyed cloth is purely one of appearance, it having been found that a more inexpensive cloth could be utilized, if dyed, than a higher priced textile in the unbleached or bleached state. Furthermore, the coating composition often sufficiently penetrates the interstices of the cloth as to be visible from the under side, giving an untidy appearance to the finished leather if the obverse side was of a different color. This is especially noticeable on the edges, where the coating material often goes over the edge and on the under side for a distance of several inches. Formerly this edge was trimmed off, thus causing a considerable waste.

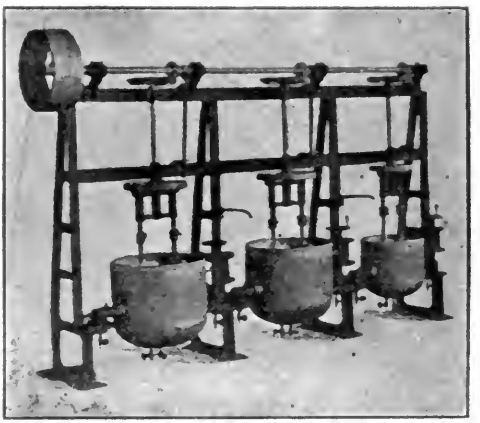

FIG 96.—Color Mixer with Stirrers. (H. W. Butterworth & Sons Co.)

By dyeing the cloth as dark, if not a darker shade, than the proposed coating mixture, these objections are practically removed. The cloth is usually dyed either a dark red, green or black, and for this the direct-dyeing aniline dyestuffs, such as diamine green, fast green, direct green, janus green, benzo green, congo corinth, benzopurpurine, erika, benzo fast scarlet, or the deltapurpurines are employed. The black is usually a sulphur black dyed in the usual manner with caustic soda and sodium sulphide. The dyestuff is first dissolved in hot water in a mechanical contrivance, the H. W. Butterworth Color Mixer, illustrated in Fig. 96, being very serviceable where large quantities of cloth are being operated upon. After apparently the whole of the dyestuff has passed into solution, the contents of the mixers are strained through fine cheesecloth or wire gauze (Fig. 97) to remove any undissolved particles. The cloth, usually in 300 yard lengths, is prepared

for the dyeing operation by a previously thorough boiling with a small amount of soap, usually with the addition of a softener such as Turkey red oil, which causes the cloth to become softer and the dyestuff to be more uniformly deposited on the cotton fiber. The dye solution is prepared of a strength of about 2–4% of dyestuff to the weight of goods to be colored, with about three times the weight of common salt or Glauber's salt added to decrease the solubility of the dyestuff in water, and thus aid in its deposition on the fiber. The dyeing process, which is continuous, is carried out in a dyeing machine known as a jigger (Fig. 98), the cloth in a wet and preferably warm state being slowly drawn through the dye solution, which is often fortified as it becomes weakened. After dyeing the cloth passes through a squeezer which presses out a considerable amount of the dye liquor held mechanically, and from this a slight rinsing may or may not be given, after which it is dried by means of a drying machine of a form as indicated in Fig. 100. After dyeing the

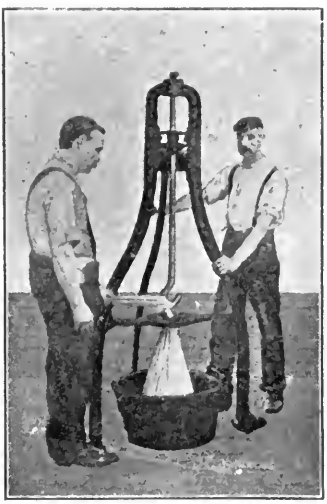

FIG. 97.—The Coplin & Crowe Color Strainer. (H. W. Butterworth & Sons Co.)

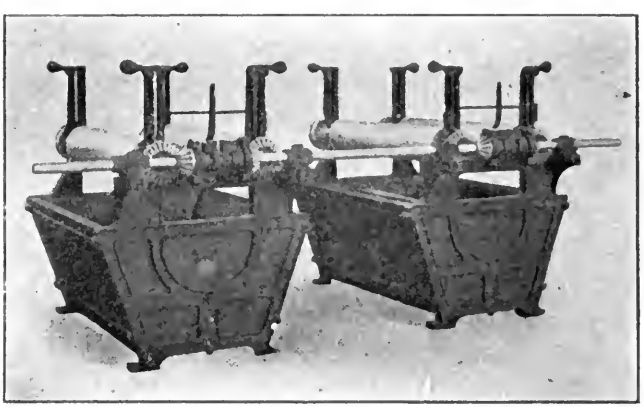

FIG. 98.—The H. W. Butterworth Dyeing Jigger.

processes are similar to those included in the manufacture of paper. By means of the installation of a series of machines as indicated, it is

possible to completely dye, wash and dry a 300 yard roll of cloth of 60 inch or less width in from 1 to 3 hours, and after starting, the process is continuous and practically automatic, the only portion requiring attention being the gradual replacement of dyestuff and salt to take the place of that deposited on the cloth. The liquid expressed by the squeezer is replaced in the dye-bath. Heavy tension is applied to the rolled cloth in order that contraction during the several steps of the

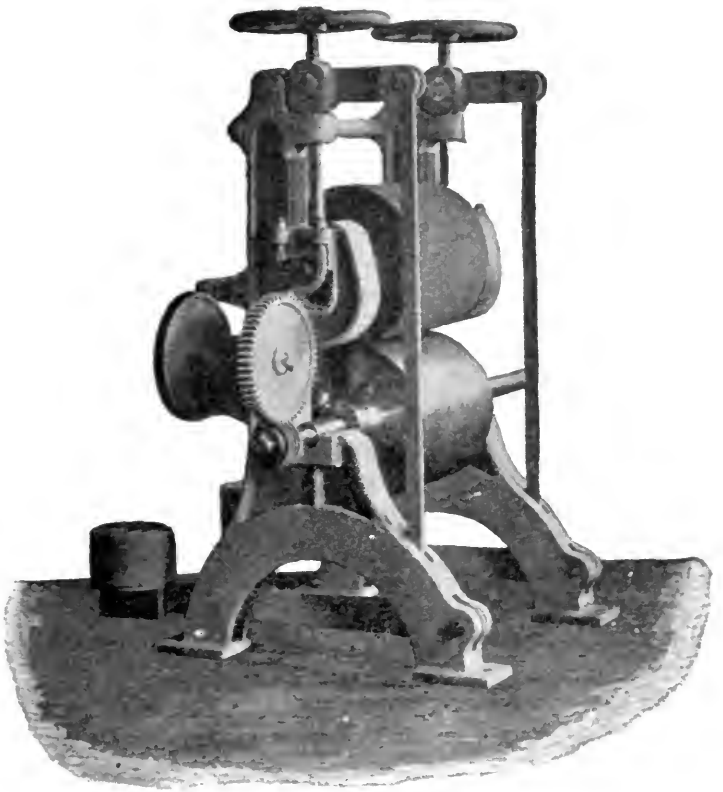

FIG. 99.—The H. W. Butterworth Cloth Squeezer.

process may be prevented. The cloth is not ironed after drying. In dyeing black with the sulphur colors the same general procedure is followed with the exception that copper- or iron-containing apparatus is prohibited on account of the formation of metallic sulphides which would streak the goods. The rolls and dye vats are constructed entirely of wood or metal, faced with gutta percha or vulcanized rubber, and the cloth is thoroughly washed, after dyeing to eliminate traces

of sulphides and other sulphur compounds which may afterwards oxidize into sulphuric acid and thereby materially tender the fiber. The cost of sulphur colors is much lower than the usual substantive or direct dyes.

Measuring. A measuring attachment of the Curtis & Marble type is shown in detail in Fig. 102, in which the goods are drawn through the roll by power, the revolutions of the roller being recorded on a

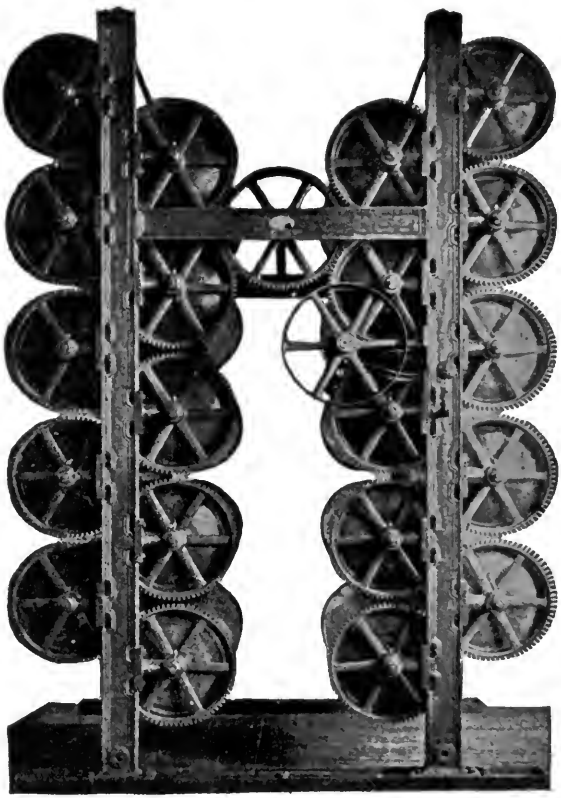

FIG. 100.—20-cylinder Upright Drying Machine. (H. W. Butterworth & Sons Co.)

dial attached as indicated in the illustration, and similar to that used in the weave rooms of woolen mills. It is a well recognized fact that a continuous piece of cloth, upon remaining tightly rolled for several weeks will, upon unrolling and remeasurement, be found to exceed the previous recorded length by 0.5–1.5%, due to stretching while under the tension of the roll. Attached to the roll is a dial, usually registering in half and whole yards (Fig. 103). Where it is desired to

wind the cloth in large and hard rolls, a combined cloth winder and measurer (Fig. 104) is usually employed.

Inspecting. Those imperfections in the weave of the cloth usually indicated by a mass of tangled threads producing a lump or knot are not infrequent, and must be removed prior to coating, or the raised surface will cause an unevenness in the finished coated product. Such knots in embossing are prone to pull away from the cloth, due to deficient adhesion, and produce a blemish which must be cut out before the cloth is of use in the arts. For this reason inspection of the cloth is an important procedure. The operator stands in front of an inspecting machine (Fig. 105), the cloth passing up the inclined table and in full view, where any defects may be detected and removed.

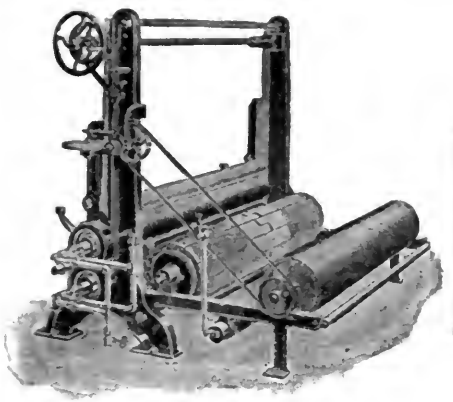

FIG. 102.—The Curtis & Marble Calender Rolling Machine with Adjustable Measuring Attachment.

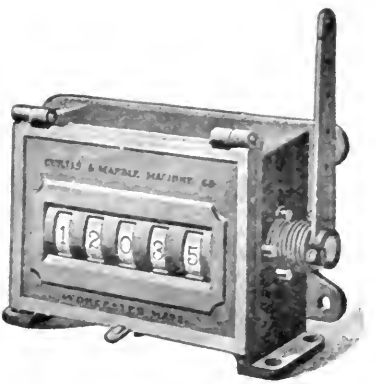

FIG. 103.—Counting Register for Measuring Cloth.

The removal is accomplished by hand, using a long, sharp-pointed knife, the "knots" being cut out without seriously weakening the cloth at the point of operation. The machine may be started and stopped at will, being governed by the operator's foot on the treadle-board in front, acting through a friction clutch on the driving pulley. A rolling head at the rear places the cloth on the rolls, and is provided with spreader bars to take out wrinkles and turned edges. The speed of the machine may be adjusted according to the class and condition of the goods and the skill of the manipulator. A measuring dial can be attached if desired.

Cleaning the Cloth. The previous processes have more or less filled the cloth with dirt and lint. It is to remove this surplus lint and extraneous matter and raise the nap (fibers) of the goods, that a brushing or scrubbing machine finds application. The advantage

of removal of free lint is that its presence gives a weaker foundation for the anchorage of the subsequently applied pyroxylin solutions, and the greater advantage of the brushing machine is probably to raise the nap, thus causing the pyroxylin to adhere more tenaciously, and more readily penetrate the interstices of the cotton fiber. For this reason "singeing" or burning off the fibers by means of a flame is never resorted to in cloth intended to be pyroxylin coated. Well-brushed cloth gives a better finished leather because the firmer anchorage requires less coating composition and hence equal tensile strength with greater flexibility and elasticity. The value of this operation is rapidly becoming recognized, so that at the present time nearly all cloth intended for artificial leather is brushed before coating. The

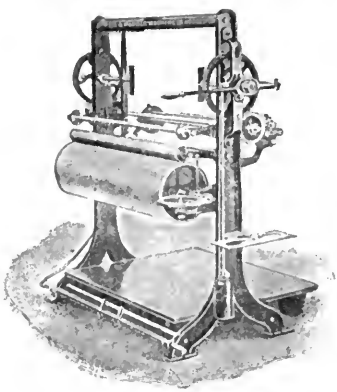

FIG. 104.—The Curtis & Marble Cloth Winder and Measurer.

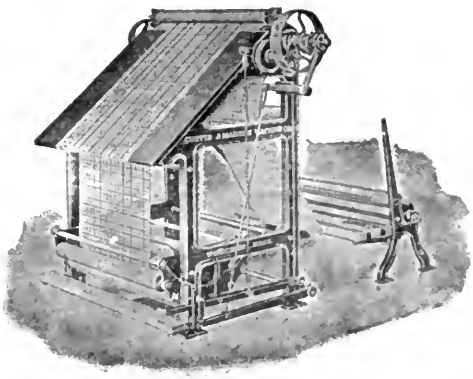

FIG. 105.—Cloth Inspecting Machine with Reverse-motion and Rolling-head.

vertical are to be preferred to the horizontal brushing machines, Fig. 106 illustrating the former of the Heath type, as constructed by the Curtis & Marble Co. After passing over tension and spreader bars in front the cloth enters at the bottom of the machine and passes straight to the top, being cleaned on both sides during the upward passage. By an arrangement of the dust chutes in the interior the dust and lint from each of the three pairs of brushes are conducted to the bottom of the machine without being intercepted by the brushes underneath or by the cloth. A hopper is placed at the bottom of the machine and connected by a pipe to an exhauster, for removing the dust and freeing as much as possible the room from particles arising from the machine. The exhauster being adjustable, guide bars are arranged to hold the cloth in contact with the brushes and minimize vibration. The brusher should be filled with stiff Russian bristles, which are the most effective for cleaning cotton cloth. The

cleaning rolls are adjustable, so they may be regulated to bear lightly or heavily on the goods as required. Doors at the front and back of the machine furnish ready access to the interior, the dust chutes being removable so that the brushes may be readily reached for cleaning. Occasions have arisen where it was desirable to smooth the coated cloth prior to embossing, in which event one or more of the bristle brushes may be replaced by sandpaper or emery rolls. There is usually attached to the brushing machine a steam-heated steel-cylinder drying machine, where the last traces of moisture are removed from the cloth. This removal of moisture is necessary in order to insure maximum adhesion of the coating composition, and this final drying usually takes place just before coating, that no considerable time

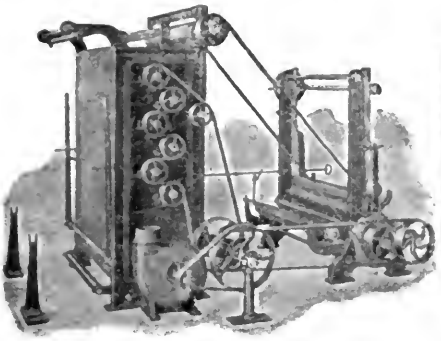

FIG. 106.—The Heath Patent Vertical Brusher.

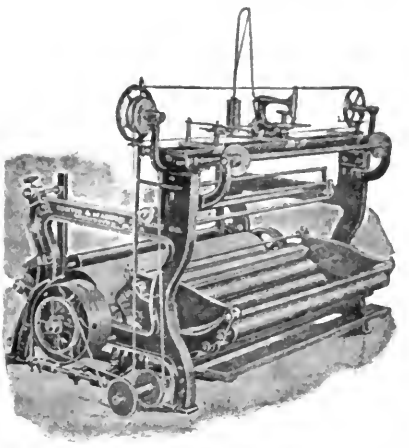

FIG. 107—Railway Sewing and Rolling Machine. (Curtis & Marble Co.)

may elapse in which the cloth may regain its normal atmospheric moisture, which varies from 4–7%.

Stitching. It often occurs that one or more lengths of cloth are to be joined together previous to coating, and it is necessary that the seam be uniform and not raised in order to pass under the coating knife without difficulty. If the goods can be transported readily, a so-called railway sewing machine (Fig. 107) for stitching together the ends of the goods to make a continuous piece, is indicated. By this means much time and considerable labor in changing rolls of cloth on the coating machine are averted. The cloth is drawn out to its full width and held smooth and straight by steel pins on the machine. The sewing-machine head then travels across the face of the cloth, and sews the two ends with a continuous chain stitch, which is easily

unraveled. The head stops automatically at the end of each seam, and is readily adjusted to varying widths of goods. At the end of each seam the turning of a small hand wheel brings the head back to the starting point at the left hand of the machine and ready for the next seam. Where it is more convenient to bring the sewing machine to the roll of cloth than conversely, a portable machine (Fig. 108) is generally used. (See also Fig. 109.) The great advantage in combining one or more pieces before coating is the absence of two or more yards at the ends of each piece of cloth which has not received the composition, and which is practically worthless, but necessary in order to attach to the coating machine. By combining several pieces in this manner the only limit in the number of yards which may be coated in a continuous piece is the ability to handle the rolls.

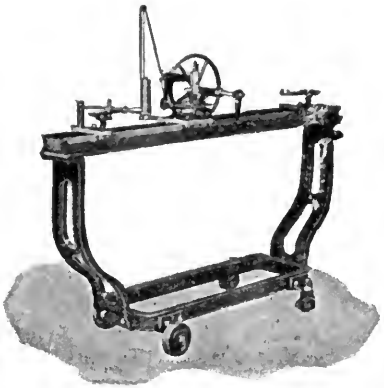

FIG. 108.—Portable Hand Power Railway Sewing Machine. (Curtis & Marble Co.)

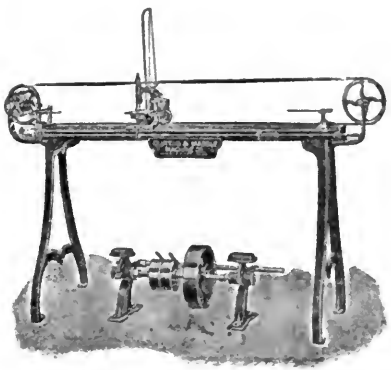

FIG. 109.—Belt Power Railway Sewing Machine. (Curtis & Marble Co.)

From 300 yards of the heavier cloths, duck and drill, to 500 yards of muslin and the lighter weights of sateen, is the maximum length which can be handled economically in one series of operations.

Coating the Cloth. The theory of the coating operation is the application of surfaces of cellulose nitrate compounds to a flexible permeable base, and consists first in impregnating the base (cloth) with a solution of the compound of just sufficient fluidity[1] to

1. If the coats are not placed one after the other with the lapse of but a short time, it has been observed that there is a distinct difference with which the upper penetrates the lower coat, and the longer between coats, or the more thoroughly the previous coat be dried, the greater difficulty will the last applied coat experience in fastening to the previous one. J. J. Mann (E.P. 877, 1896) proposes to raise the nap artificially before the pyroxylin is applied, and uses a specially constructed machine described in E.P. 19710, 1891. For description and illustrations of earlier used coating machines see J. B. Edson, E.P. 5551, 1883; F. Eckstein, E.P. 18932, 1892.

permeate it to the required depth to secure a firm hold, surround and fill the interstices of the fibers, and then drying the coating. It is usual to place from three to five separate coats on the cloth, the first being of a more fluid nature, that it may readily penetrate the textile and establish a foundation upon which the superimposed coats may be built to form a homogeneous and strong whole. This first or "skin" coat is applied with the coating knife under heavy tension to the cloth. This raises the "nap" of the cloth and assists in the deep penetration of the cellulose nitrate composition.[1] The second coat is heavier in viscosity and applied thicker, and designed primarily to deposit as much solid matter on the textile as possible.[2] The third and subsequent coats are very light and intended to produce a firm and hard finish and one as free as possible from "pin holes."[3] Each coat partially softens and dissolves the previous coat, so the two coalesce and unite to an intimate whole. That the succeeding composition may not cut too quickly or less quickly into the previous coat is adjusted by the relative amounts of cellulose nitrate solvent in the several compositions,[4] and also the proportion of vegetable oil present.[5] In order to produce the maximum durability in finish, it is customary for the inner coats to contain a larger amount of oil than the exterior, whereby elasticity is obtained, while the outer coat is high in cellulose nitrate, whereby great strength is attained. The manipulation of oil and pyroxylin is also adjusted to meet the several trade requirements to which the finished material is intended.[6] In

1. For this reason the most fluid pyroxylins are selected for artificial leather-coating formulas, that economy in volume of solvent required may be effected.

2. The speed of coating depends upon the fluidity of the composition, dryness of cloth, and temperature of hot-room to which the coated cloth is to pass through.

3. Usually the operator at the coating machine has coating material of high- and low-solvent power at his disposal, to meet a contingency of this nature.

4. By placing the larger portion of the vegetable oil—the flexible portion of the formula—in the center of the coating, a firm anchorage and tough outer surface may be produced with the minimum of the most expensive constituent—pyroxylin. If the last applied coat is too high in solvent power and cuts too readily into the previous layer, this may so weaken the anchorage that a "blister" or insufficiently attached particle may result which will adhere to the embosser in a subsequent operation, and form a blemish.

5. If there is sufficient oil present, it will retard re-solution of previous coats—oil and pyroxylin being directly antagonistic.

6. F. G. Annison (U.S.P. 602797, 1897) has clearly differentiated the various coating operations in his acceptable claim for a pyroxylin artificial leather. He claims his process as "the art of applying surfaces of nitrocellulose compound to a flexible permeable base, which consists, first, in impregnating the base with a compound sufficiently fluid to permeate it to the required depth to secure a firm hold thereon, surrounding the fibers and to an extent filling the interstices thereof; second, drying the impregnating compound; third, superimposing on the dried compound a coating of a solution of the compound thicker than the solution for the first coating, but sufficiently fluid to be spread over the surface of the impregnating compound, filling the base and partially dissolving the impregnating compound, so as to coalesce and intimately unite therewith; fourth, drying the superposed

artificial leather required for book binding, the solution is spread very thinly on the textile, and in order to obtain the requisite strength, the coating composition is made high in pyroxylin and low in vegetable oil. Increase in the number of coats appears to compact the composition so that a more durable leather results and one which will be more apt to take a sharp-cut embossing pattern without showing tendency to split or cut through.[1]

The efficiency of the finished material depends in a great measure upon the character and strength of the cloth coated. As in duck, drill and similar more loosely woven cloths, it stretches more in one direction than in another. This has a tendency to cause the grain of the embossed pattern to disappear through the tension of severe or long usage, and upholstered articles are prone to become irregular and "baggy" in places. Sateen and moleskin, in which the weave and weft have been woven with approximately equal tension, do not show the disadvantages just enumerated. The weave of the cloth seldom shows through and coated goods are less prone to become irregular in shape. Such cloth can be molded and tufted in upholstering operations with less liability of cracking the leather. In producing a finished leather of a given strength upon tension, it has been found less expensive to start with a cloth of high strength than to attempt to overcome the inferiority of the cloth by a coating composition high in pyroxylin.

Two of the best-known forms of coating machines at present in use in the United States were designed by Mr. Frank Currier of Newark, N. J., and are now built by the firm of Cyrus Currier & Sons. Their advantages and points of superiority will be apparent from the following brief description.

Fig. 110 represents the Currier Festooning Machine, with hot-room for drying the coated cloth attached. The cloth, dried, scrubbed and tightly rolled, is attached at the axle, usually in rolls of about 300 yards length, where it is unwound and passes under the knife *B*,[2] which applies the coating composition. The height of the knife from the surface of the cloth can be regulated at will, so that the depth of coating material may be accurately gauged. From the knife,

coating; and fifth applying one or more coatings of such heavier solution, drying each in turn, until a surface of the requisite body has been built up, whereby the coat is homogeneous as a whole and firmly attached to the initial application, and then after compacting the coat by heat, finally embossing it."

1. Roughly, of the total amount deposited in the several coats, about 15% constitutes the first, 50% the second, and the remainder the one to three coats necessary to produce the desired effect.

2. The spreading or coating knife has a blunt and a sharp edge. The first is intended for the heavy intermediary coats, and the sharp edge for the initial and thinner coats.

the cloth passes over the drum *C*, steam heated to about 80° [1] and then over the tensile rollers *D*, *E*, *F*, of gradually increasing size. From this, the coated cloth passes over the bar *G* and into the hot-room *H*, where it is taken care of by the festooning arrangement indicated, from which the machine and method receives its name. By means of the steam pipes *I*, combined with automatic electrical contrivances, a uniform heat of 80–85° is constantly maintained.[2] By means of the endless chain *J*, the coated cloth is caught up at *G* and carried into the hot-room, which usually has a capacity of 200 to 300 yards at one time. The cloth therefore is in contact with the heating surface from one-half to three-fourths of an hour, and this long contact with a uniform source of heat insures thorough and complete expulsion of the last traces of solvent, and is an important point in favor of this type of machine.[3] The speed of coating, the number and proximity of the festoons, the length of time they remain in the dry-room, and the temperature to which they are subjected therein, may all be modified to accommodate the class of leather which it is desired to produce, and the viscosity and nature of the coating composition to be applied. It is necessary to intelligently regulate the speed of coating to conform with the thickness of the layer applied, it being obvious that the heavier the viscosity or amount applied in a single operation, the more slowly must the cloth pass under the coating knife. A cloth winder (Fig. 104) may be attached to the back of the hot-room to receive the festooned leather after drying,[4] the roll of which is detachable and may be mounted on rollers to be more readily transported to the point of commencement in position for receiving the next coat. In some factories an opening in the rear of the dry-room takes

1. If the temperature of the drum materially exceeds this temperature, too quick evaporation of solvent results, and small bubbles appear which finally burst from expulsion of solvent vapor, or tension is reduced before breaking and the bubble remains intact. These form irregularities which increase with subsequent applications. An effectual method of overcoming this difficulty is to interpose a heavy roll, one weighing 600–800 lb. of solid steel, so that the coated face passes under this at considerable tension. A crackling noise can be heard continually, due to the bursting and polishing of these excrescences from contact with the roll. It is unnecessary to use a roll of this description on the final coats if the intermediate coats have had the pinholes removed in this manner.

2. If the temperature greatly exceeds this, the strength of the deposited coat will be affected, and cracking may result. If much below this temperature, last traces of solvent are incompletely expelled, and a soft final leather results, and one in which it is difficult to remove the amyl acetate and fusel oil odor. In any event the odor is incompletely removed, as is noted by the strong smell of these solvents at the time of embossing, even several weeks after coating.

3. Some advocate a final expulsion of solvent and toughening of the leather by one or more days' exposure to the sun, but the author is unaware of this being done in practice.

4. Figs. 111, 112 and 113 being scale drawings, it is unnecessary to state dimensions.

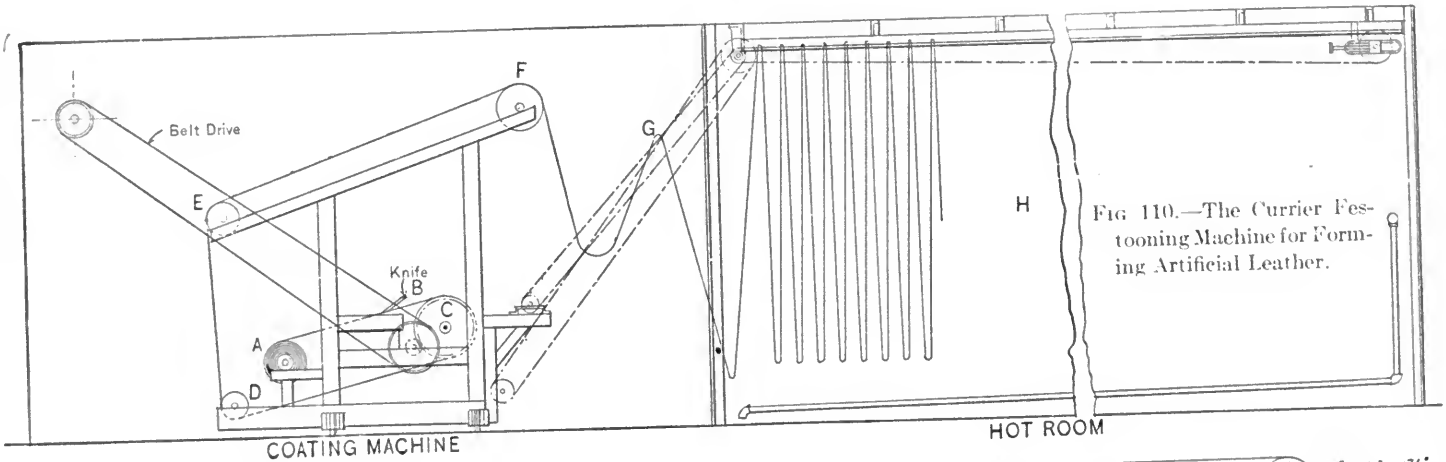

FIG. 110.—The Currier Festooning Machine for Forming Artificial Leather.

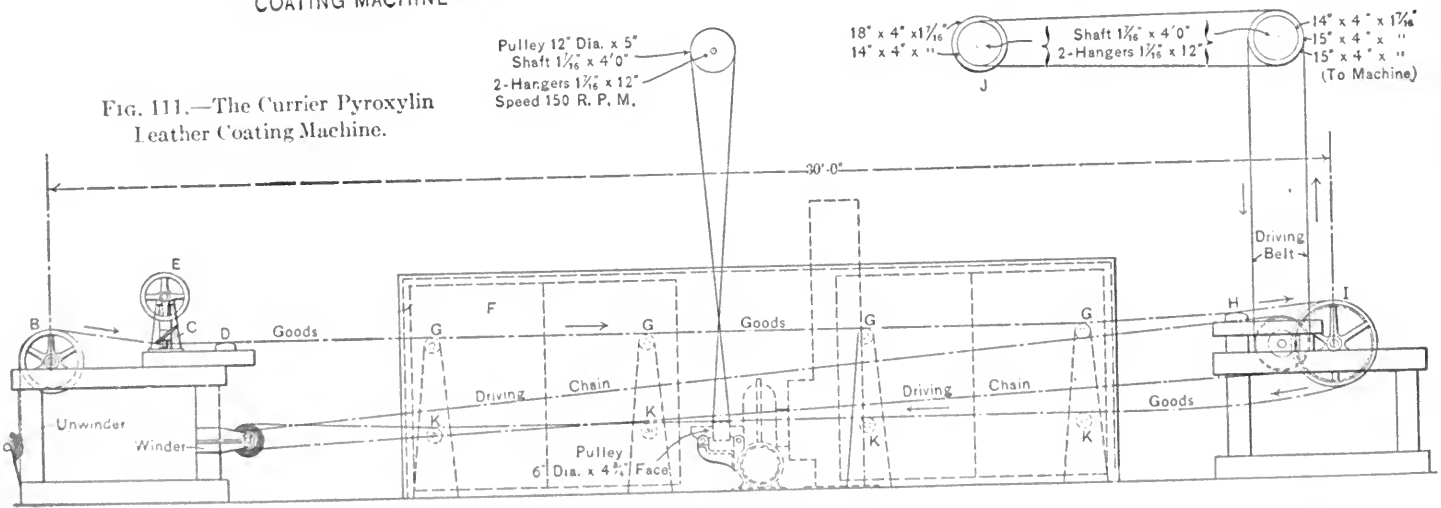

FIG. 111.—The Currier Pyroxylin Leather Coating Machine.

the cloth, which passes beneath the floor through a cooling chamber, and automatically rolls up just back of the roll *A*, which is being coated. The transference is but a matter of two or three feet, to enable another coat to be deposited. The hot-room is thoroughly ventilated by means of a Sturtevant or similar blower, usually discharging into the open air. In order to avoid accidents from the collection of benzine vapor at the bottom of the drying chamber, it is usual to have fan connection at the bottom also. The coating material which gradually creeps under the knife blade and shows on the cloth at the other side is periodically removed by scraping with a spatula. The dry-room is constructed of tongue-and-grooved material, lined with sheet lead or tin.

Figs. 111, 112 and 113 represent the front, side and top details of a coating machine designed and built by Cyrus Currier & Sons in 1907 for a Japanese firm,[1] and may be said to embody the latest and most approved methods of construction in this class of machines. The principal difference between this and the previous system of coating is in the drying arrangement, where the cloth, after being brought in contact with the artificial heat for nearly five minutes, is partially cooled, and then subjected to heat again. Power is applied entirely from the rear, thus obviating in a great measure the constant vibration present where power is applied directly to the coating machine, and which results in the appearance of minute wave lengths on the coated cloth, due to the continual vibration of the knife at the moment when the cloth receives the fluid pyroxylin coating. The large wheel *E*, which regulates the distance of the knife *C* from the cloth and hence the weight of coating material deposited on a given area, can be delicately adjusted and may be graduated in degrees on the circumference and connected with a pointer by means of which the tension may be accurately registered and duplicated at any future time, provided the same speed of passage of the cloth under the coating knife be known. After receiving the coating material, the goods pass over the leveling plane *D*, and into the hot-room *F*, where by means of guide-rolls *G* tension is maintained and uniform exposure of surface assured. As the result of this method more uniform drying is possible than where the festoon arrangement is in practice, and more thorough aeration and hence removal of solvent from immediate contact with the coated surface. This removal is made possible by the use of a powerful blower situated in the center of the drying system, and by which the

1. M. Takeuchi. The alternate cooling and heating induces corresponding contraction and expansion of the composition, and upon theoretical grounds assists in the volatilization of solvent.

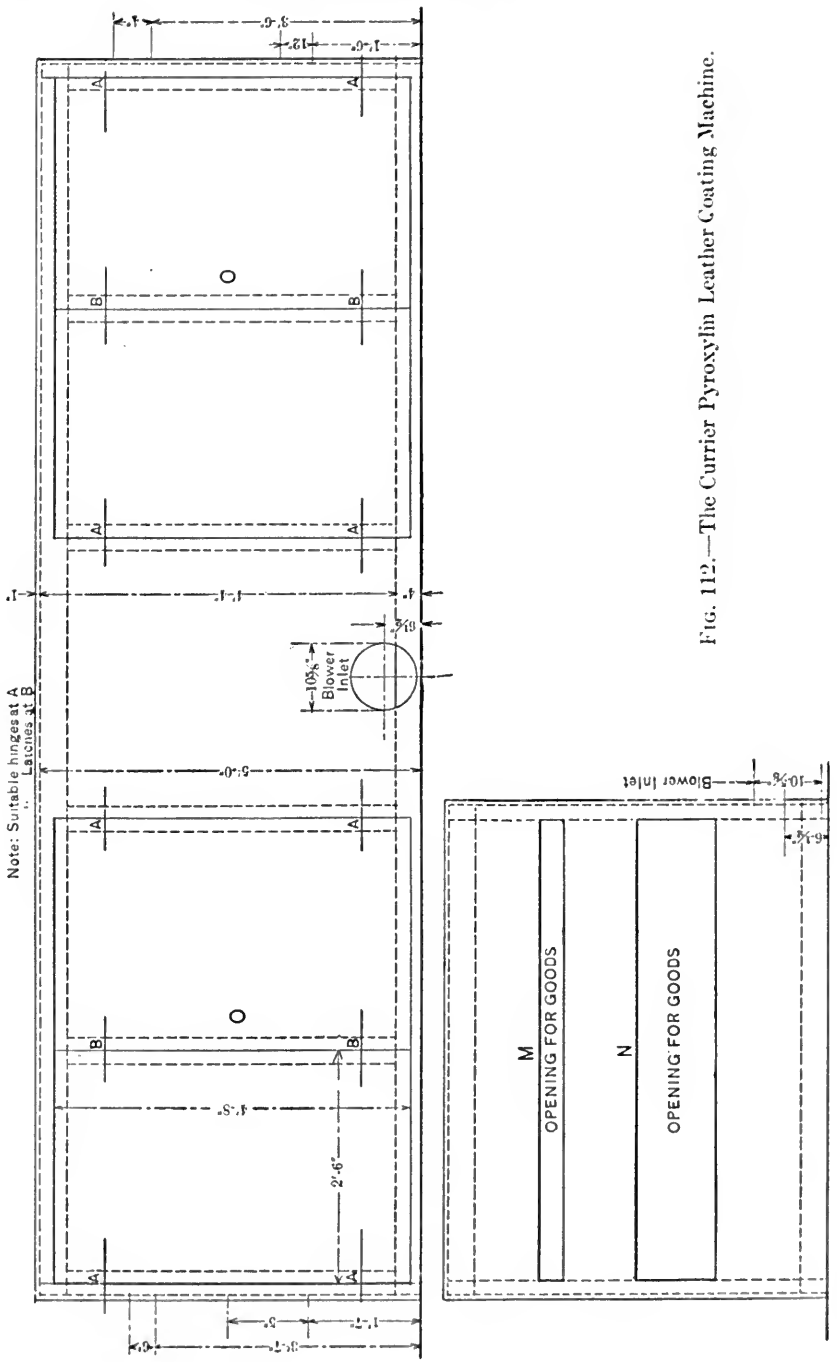

FIG. 112.—The Currier Pyroxylin Leather Coating Machine.

air may be completely renewed every three minutes. Tension may be increased or decreased at will by regulation of the wheel *H*. The balancers *K* retain an even tension during the return trip, where the cloth is wound within five feet of the place required for depositing a future coat. In order to afford protection of the coated cloth from dust and moisture, and the operator from the effects of the continually evaporating solvent, the coating frame is inclosed (Fig. 112) with opening for the outgoing and incoming goods. The dry chambers have doors which admit of inspection at any stage of the drying process. The usual temperature maintained is 85–100°, and may be decreased or increased by varying the speed of passage of the cloth or the number of units in the drying system. Usually two effects have been found sufficient. As indicated in Fig. 113, the discharge of the air-laden solvent is made at the top, whereby the circulatory system in the dry chamber commences at the bottom and moves upward. This obviates any possibility of the accumulation of benzine vapor. The air inlet is usually covered with fine cheesecloth or wire mesh in order to minimize the deposition of dust on the freshly coated cloth. By means of rolls in the dry chamber, the cloth may be made to traverse a complete circuit twice, and thus exposed to heat double the length of time indicated. It has been contended by some authorities that the desirable physical properties of the finished cloth—strength, pliability, resiliency and toughness—are more effectually obtained where the temperature of drying is reduced and the time of exposure of the cloth to the artificial heat increased. From 200–400 yards can be coated each hour in machines of these types, the number of yards of finished cloth which may be produced being obtained by dividing the total coating length by the number of coats applied. The usual coating composition for the prime or first coat may be stated as:

Cellulose nitrate	40 lb.
Vegetable oil (say castor)[1]	55 "
Wood alcohol 98%	12 gal.
Amyl acetate	8 "
Refined fusel oil	2 "
Benzine 62° Bé [2]	7 "
Benzine 71° Bé.	13 "
Pigment, sufficient to produce the desired shade.	

1. Usually the inferior grade, "seconds," is used for this purpose.

2. The advantage of benzine of two boiling points and hence speeds of evaporation is to use as small amount of the 71° Bé. liquid as possible on account of higher price, but which is necessary, or the preponderance of non-solvent would increase, due to the greater volatility of wood alcohol as compared with the 62°, and hence incipient gelatinization might occur and thus weaken the film.

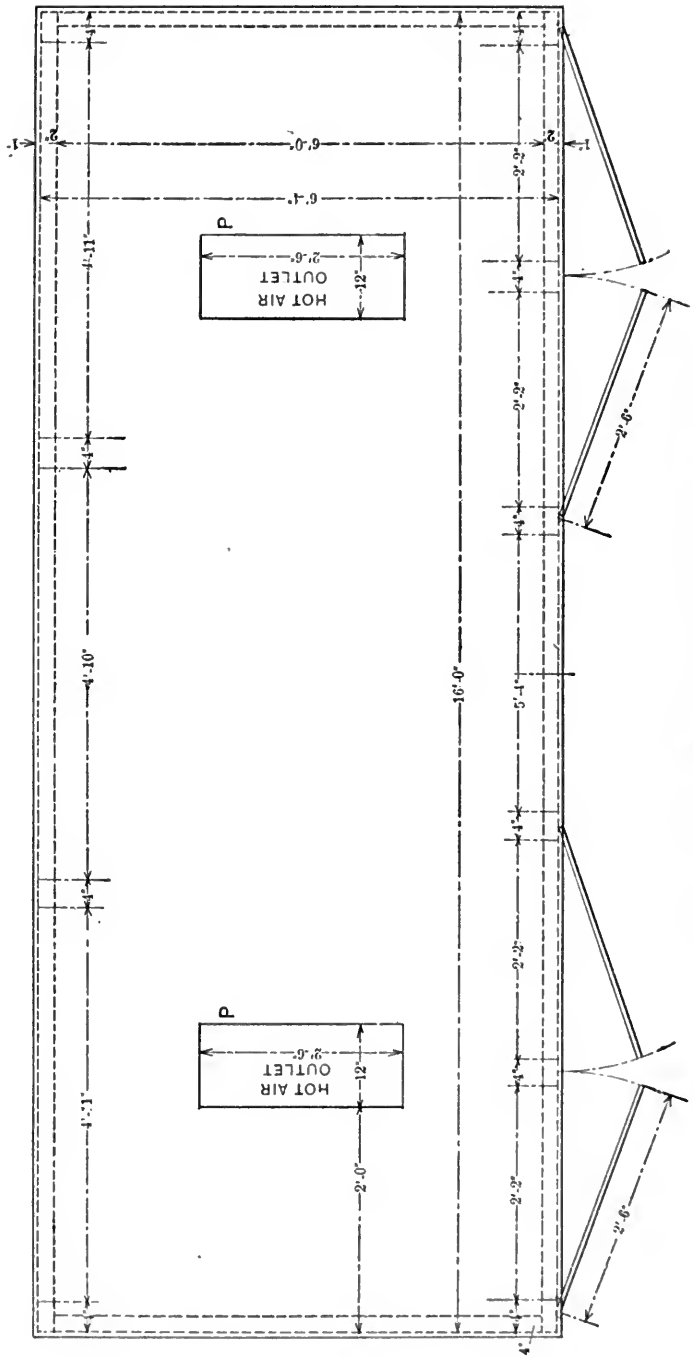

FIG. 113.—The Currier Pyroxylin Leather Coating Machine.

For the interior coats, the pyroxylin is decreased from 10–20% and the oil increased accordingly. The final or finish coat is again high in pyroxylin, and may exceed the quantity of oil present by as much as 20%. The volume of combined solvent and non-solvent may vary within wide limits, due to the viscosity of the pyroxylin used and the volume of coloring matter required. The fluidity of the coating compositions, ("dope" or "jelly" as they are usually called), must be about the same in order to flow out under the knife properly in the operations of coating. It follows, *a priori*, that a cellulose nitrate of high viscosity requires more solvent to produce a given fluidity than one of less tenacity. Therefore the number of coats to be applied are not a fixed number, but depend primarily upon the nature and total solids present in the composition and the appearance of the coated goods. The boxes containing the coating material are kept on scales near the coating machine, and the amount of material being consumed continually noted. In general from 10–16 oz. solid material per square yard of finished leather are the usual limits of total solids deposited.

Solvent Recovery. From an inspection of the ingredients given in the representative formula stated above, it will be noted that about one-third of the cost of the coating material is liquid and volatilized in the drying of the several coats. This may exceed 50% in some of the more inexpensive leathers. Admitting forty-five thousand yards per day as a rough approximation of the amount of this leather produced in the United States, it is evident that several thousand dollars in fluid is vaporized weekly in the process of cloth drying. The process of solvent recovery of Gray[1] consists, after the usual impregnation of the cloth with the coating composition,[2] of passing the cloth into an air-tight casing. This opens by means of a narrow aperture into a steam-heated drying chamber from which the vapor is withdrawn and passed to a condenser, the bulk of the air and uncondensed vapor being returned to the drying chamber, while a small portion may be passed through a second refrigerated chamber. De Grousilliers[3] causes the coated cloth or paper to travel through a hot-air chamber where a fan aided by suction passes the vapors through condensers, pressure and reduction of temperature both being applied. The method of M. Liebrecht[4] is intended primarily for the recovery of vapors heavier than air, but is claimed to be admirably adapted for use in recovering amyl acetate, ether and alcohol. The chambers in which the vapors are

1. E.P. 19710, 1891; abst. J.S.C.I., 1892, **11**, 904.
2. E.P. 19175, 1894; abst. J.S.C.I., 1895, **14**, 862.
3. E.P. 13562, 1895; abst. J.S.C.I., 1895, **14**, 886.
4. F.P. 352298, 1905.

present are provided with troughs with perforated false bottoms, the spaces between the bottoms being connected with a pump; the troughs are situated at the bottom of the chambers so that the vapors are collected in them and drawn off, whence they pass into a condensing liquid through perforated pipes, the liquid being cooled. Where acetone was the sole solvent, recovery may be nearly complete [1] by bubbling the vapors through an aqueous solution of calcium chloride contained in a series of washers. The acetone is dissolved in, and combines with the calcium chloride, from which it may afterwards be recovered by distillation. So far as the author is aware, no firm is recovering this solvent in the United States at the present time. Suction of the blower outlets from the drying chambers into various refrigerating systems, brine, ammonia and calcium chloride, have all been unsuccessful, about the only thing recovered being water and "smell." The difficulty appears to be that in order to obtain satisfactory elimination of solvent from the cloth, renewal of the air in the dry-room is so frequent that the critical temperature of the combined vapors is not reached, and but little liquid deposition results. In one series of investigations, 1,200 feet of pipe surrounded by a brine system cooled to 0° failed to liquefy more than 2 gal. of fluid per hour, of which over 90% was water. Artificial leather at the present day is produced in the face of very keen competition, and the practical solution of the problem of economical solvent recovery would add a great stimulus to this industry.

Classes of Artificial Leather. In addition to the blown-oil and castor-oil-containing leathers, which are distinct classes, various subdivisions intended for specific purposes may be noted. Hospital sheeting is cloth coated on both sides with pyroxylin-containing material, of a drab shade, high in pyroxylin to render it impervious, and containing usually antiseptics, as iodoform, aristol, mercuric chloride or other germicide. The use of sodium sulphocarbolate has been patented for this purpose.[2] The leather is intended to be treated harshly, to stand heat and chemical sterilization, and is necessarily not very flexible. It offers the advantage of being practically unaffected by the usual operating solutions and liquid bactericides, easily sterilized and unaffected by organic or weak inorganic acids.

For decorative wall paper, fancy upholstery and elaborate trimmings for furniture, the pigment in these leathers may be replaced by gold, silver and colored bronzes. These are usually incorporated with the "dope" before coating, the finish coat being always transparent in

1. C. Harrison, W. Bate and W. Perks, F.P. 381529, 1907.
2. J. H. Stevens, U.S.P. 612553, 1898.

order to protect the metal from the hydrogen sulphide in the atmosphere.[1] With aluminum this step is unnecessary. Where a decided gloss is desired the transparent coat must be applied by hand by brushing, and always after embossing. Iridescent and spangled effects may be produced by coating the cloth in the usual manner, and then by means of an atomizer containing a complementary or harmonious color dissolved in pure amyl acetate or mixed with it if pigment,[2] the color is sprayed upon the cloth immediately after passing under the coating knife in order that a firm anchorage may be had. Gold and silver bronzes, mica, ground mother-of-pearl, and other fluorescent and iridescent materials may be deposited in this manner and very curious and pleasing effects produced. In mission and other antique furniture it is often desirable to depart as far as possible from an appearance of newness, and dull finishes are resorted to. The first requisite is a coating composition low in vegetable oil;[3] the next is the deposition of a dull or matte color, the latter being usually accomplished by means of large atomizers in which lampblack thoroughly ground and suspended in amyl acetate is used. Immediately upon the issuance of the cloth from under the knife, it is met by a spray of the black manipulated by hand, which effectually covers any appearance of gloss.[4] (See also Antique Leather.) The upholstery in smoking cars is often produced in this manner. It is a peculiar fact that in the manufacture of bronze-containing coating formulas, the alloy must be incorporated with the pyroxylin but a few hours before using, for upon standing gelatinization of the entire mass occurs, and the mass cannot again be brought into a satisfactory state of solution. This applies most forcibly to aluminum-containing formulas. In the more inexpensive leathers, rosin and the soft copals enter. Rosin is prone to come to the surface after the finished goods have been stored for some time, and appears as a whitish efflorescence or bloom. The leather may be readily restored to its former appearance by wiping

1. The copper entering into nearly all the gold bronzes is turned darker, due to the formation of black cupric sulphide.

2. That the sprayed material may cut into the coating before evaporation sets in. Wood alcohol or other similarly low-boiling liquid would not answer, because the solvent would evaporate before firm attachment could take place.

3. That the gloss may be as subdued as possible. Where large amounts of cloth are treated in this manner, large atomizers worked by air pressure are substituted for the smaller hand apparatus. The pigment must be ground exceedingly fine, as the proper covering of the entire area uniformly before the recent coat has set, requires considerable care and experience. The pigment, being high in solvent, immediately attaches itself to the moist pyroxylin surface.

4. In order to obviate the possibility of the heat driving the oil to the surface and interfering with the desired appearance, these goods are either embossed cold, the impression being made longer, or a very gentle heat is admitted to the embossing chamber, and the time of plate contact correspondingly reduced.

the cloth with a liquid which will dissolve the resin but not affect the nitrocellulose—benzine for rosin, and fusel oil for the copals being ordinarily used.

Calendering. The coated cloth is rough in appearance, usually pitted with small holes formed by the escape of solvent, and is never offered for sale in this condition. If it is desired to subsequently emboss the goods with a fine pattern where small inequalities would readily become apparent to the eye, the goods after coating are passed through a calendering machine, as illustrated in Fig. 114. The upper and lower of the three rolls are hollow steel, and have steam connec-

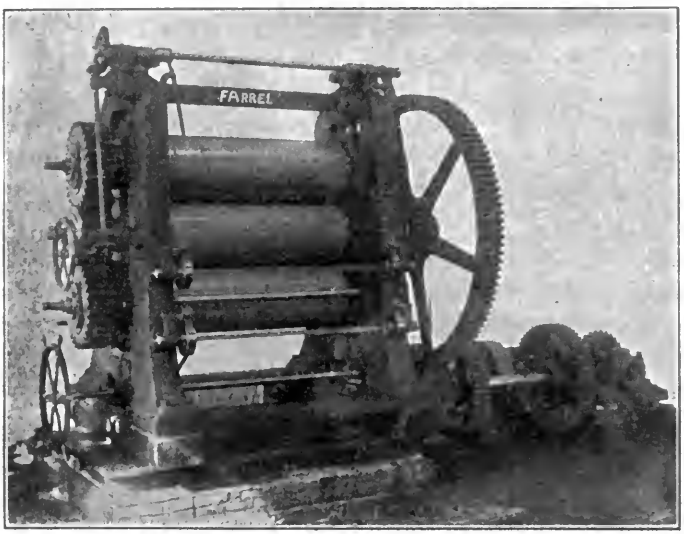

FIG. 114.—The Farrel Standard Three-Roll Calender.

tion. The object of calendering is to obtain a more compact and smooth surface, and this is accomplished by means of the two steam-heated rolls, which revolve at a higher rate of speed, although in the same direction to the central roll. The material is run through the upper roll, the coated face next to the steam-heated roll revolving at the increased speed. It passes next through the under roll in the same manner, the variation in speeds being usually as two to three. The heat, pressure and friction smooths out any unevenness and produces a flat and somewhat polished surface.

Embossing. With the exception of hospital sheeting and a small group of muslin textiles coated with pyroxylin, all artificial leather is embossed before being placed on the market. Two forms of

embossing are used, that produced by rolls and that by plates. The former (Figs. 115 and 116), consist of engraved rolls of hammered steel

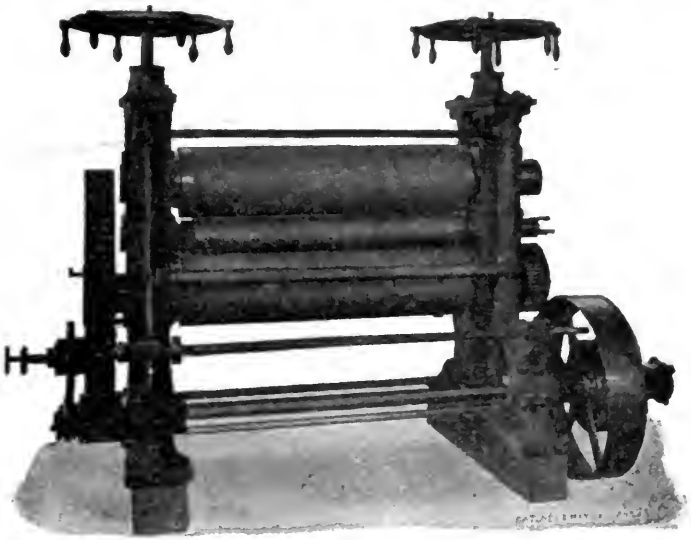

FIG. 115.—The Currier Three-Roll Embossing Machines.

with counter rolls of paper pressed on steel mandrels to receive the pressure of the embossing pattern. Steel coated with gutta percha

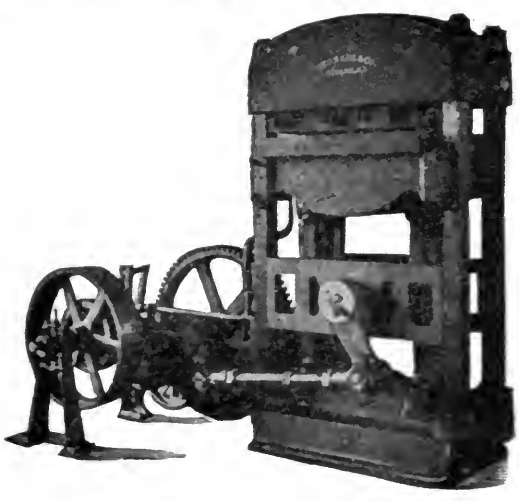

FIG. 116.—The Geo. H. Ohl Plate Embossing Press.

is also used. The engraved roll is steam heated, and the coated cloth simply passed through the machine once, the heat and pressure being

sufficient to permanently impress the pattern upon the goods. Steel-roll embossers have several disadvantages for this class of work, which are gradually causing them to go out of use. The engraved rolls cost several hundred dollars each. The counter rolls can only be used for one pattern or patterns of similar depth of penetration. Therefore to do the varied class of embossing required in the pyroxylin artificial leather trade, requires a considerable investment. Furthermore the fraction of a second in which the goods are in contact with the two rolls at their greatest pressure has been found insufficient to impress with the desired sharpness many of the patterns. For these and other reasons, embossing presses are being more extensively used and in which the impression results from the contact of a flat plate (Fig. 117). The upper portion of the press contains the steel sheet

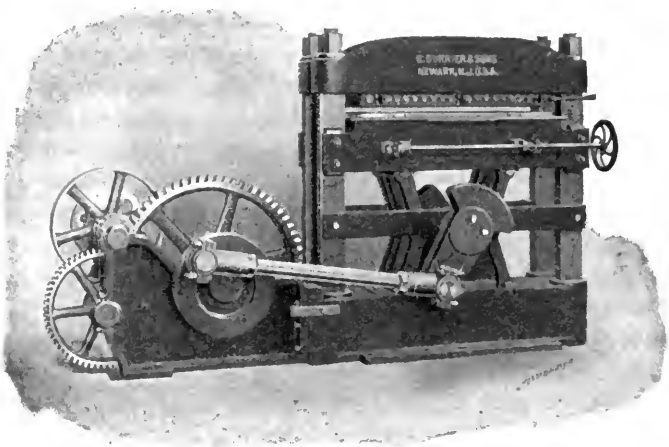

Fig. 117.—Currier Steel Embossing Press.

or pattern, and this is connected with a steam chest located in the upper portion of the head. The cloth is placed between the jaws, the press forced down, allowed to remain as long as required and raised when a new surface is placed in position to receive the imprint. Much clearer, more durable and natural effects may be produced with presses of this type, while the cost of new plates is but the fraction of the expense of rolls.[1] The temperature of the steam chest is kept at about 80°,[2]

1. The average cost of embossed plates is eight cents per square inch, irrespective of the size, and in general of the pattern.

2. Both the embossing and coating machines are usually wire grounded to minimize danger from electrical disturbances, and the buildings are equipped with speaking tubes rather than with telephone connection for the same reason.

If the temperature of the steam chest is too high, the oil in the coating composition comes to the surface and remains there after embossing, imparting an objectionable greasy feel to the goods. Lightly brushing the surface with amyl alcohol will

an actual contact of from 15–25 seconds being the usual rate of speed.[1]

Varnishing. To increase the gloss and wearing qualities, considerable artificial leather is varnished by hand after embossing. The lacquer contains from 6–8 oz. pyroxylin, is low in solvent power, a satisfactory composition being represented by the following formula:

Amyl acetate	45	parts by volume
Wood alcohol, 99%	15	"
Refined fusel oil	3	"
Benzine 62° Bé	37	"
Pyroxylin	5	parts by weight

The lacquer is placed on the leather with flat, four- or five-inch brushes similar to painting, after which the lacquer goods are passed over long rows of heated steam coils until the solvent has thoroughly dissipated. The brush is moved but lightly over the surface so as not to dull the pattern of the embossing. Where the original shade of the leather has been impaired from embossing or was incorrectly matched, the difficulty may be remedied by introducing dyestuff in the varnish composition. Attempts to improve upon the hand method of varnishing by atomizing a transparent solution by atomizers propelled by an air blast have not been successful; although much more surface can be covered in a unit of time, the high gloss is not apparent. If the embossing plates are too hot, excess of oil oozes to the surface, and this must first be removed by wiping with fusel oil, or the varnished surface will take on a streaked and uneven appearance. If it is desired to change the pattern of an embossed piece of goods, the same may be varnished with a composition similar to the above but containing in addition a weight of castor oil equal to that of the pyroxylin, after which it may again pass under the embossing plates and the impression will be as distinctive as if no previous embossing had taken place.

remove excess of oil, should such a course be desirous. Insufficient heat produces an impression which is indistinct and does not hold up well under usage. In both calendering and embossing great care must be exercised that the more delicate colors—light pinks, and pale blues—and which are produced by means of organic dyestuffs and lakes, are not changed by the heat. In matching colors, this point becomes of considerable importance, as the heat to which the composition is subjected may be sufficient to throw the shade off. These same types of embossing machines are used to produce the crushed and brocaded appearance to velvet and plush.

1. The length of contact is in inverse proportion to the temperature of the embossing plate.

The patented formula[1] of A. Cohn for a similar preparation consists of:

Amyl acetate	100 parts
Celluloid	7–12 "
Castor oil	10–18 "

In the author's judgment such a formula would produce a lacquer too soft for satisfactory wearing, on account of the high percentage of oil.[2] [3]

Hand-Decorated Leather. In the production of permanent and artistic wall papers, furniture, upholstery, etc., multicolored effects are produced by hand on the regular pyroxylin-coated cloth, and in a manner similar to oil painting on canvas. The colors, which are usually pigments or lakes on account of their opacity and durability, are first ground in fusel oil, and combined with high boiling point solvents, the usual formula being amyl acetate 80, refined fusel oil 20. As indicated in the above formula, the liquid portion is always high in solvent power, in order to insure quick and deep penetration when placed on the pyroxylin coating. The design is painted on with various colors by means of small artist's brushes, the solvent immediately cutting through the superficial pyroxylin layers, and imbedding itself firmly, thus becoming a portion of the coating. The quick penetration, and solution heavy in pigment, causes practically no spreading when applied, so that fine lines and delicate work may be executed. Adhesion may be increased and a soft effect produced by lightly applying a final coat of colorless pyroxylin lacquer, which causes the colors to slightly run, the diffusion and blending of color producing warmth and tone to the work. Often an embossed pattern, as flowers, may be colored in their natural shades in this manner, and the wall paper and upholstery may be made to harmonize with

1. E.P. 16429, 1901.

2. The formula of H. Lüttke (E.P. 24955, 1902), which consists in incorporating nitroglycerol with the pyroxylin, has never been used industrially on account of the possible danger involved.

3. The lacquering composition of D. Marcus (E.P. 1372, 1894) consisted of a methyl alcohol solution of shellac and camphor dyed with the juice of Rhus vernicifera. According to J. Wallner (Chem. Zeit., 1910, **34**, 22) the most satisfactory and economical leather substitutes thus far have been those in which a cotton fabric is impregnated and coated with cellulose derivatives. Waste celluloid scrap is dissolved in 94% alcohol, 1 kg. to 5 l., with later addition of the desired mineral color in castor oil. This mass is forced by pressure through a slit upon the fabric which is reeled directly into an exhausted, steam-heated drying chamber; 80% of the alcohol is recovered. To completely fill and cover the ware, six to eight coats of increasing viscosity are applied. The fluidity is augmented by addition of olive oil; castor oil is more often used, giving elasticity to the product, and is used in diminishing ratios in the successive coats. .

the general color scheme, producing relief work of very beautiful effect. Coats of arms, insignias, replicas, and similar raised work, are first heavily embossed by means of a special pattern, usually with a plate embosser, and upon any colored background, after which the design is executed by hand. Such work is necessarily quite expensive, and the textile backing upon which the original pyroxylin coats were deposited is usually a closely woven sateen or moleskin. To give increased strength, both sides may be coated. There is practically no limit to the intricacy of designs which may be executed in this manner, and includes anything which may be produced on canvas with oil colors.

According to L. Preaubert,[1] who has patented a process for so doing, peculiar and pleasing designs are produced by placing small bits of tin foil over the leather before embossing, which gives a spangled effect after decoration.

Smootching. This is the application of a colored, usually transparent coat, to the surface of a heavily embossed leather, the applied solution being always of a darker color than the surface over which it is painted. In 1867 [2] Parkes took out a patent for the application of a thin varnish of dissolved pyroxylin to a coated fabric, by regularly spreading the compound over the cloth, which is afterwards sprinkled with fish scales, or a bronze luster produced in the hollows of the embossed fabric by means of sprinkling over the surface bronze powders, the latter being afterwards partially wiped off. C. Wittowsky obtained smootching effects mechanically,[3] by means of heated dies.

This treatment of leather is practiced at the present time, by rubbing lightly over the top of the embossed pattern by means of a cloth, a 3–4 oz. pyroxylin solution in amyl acetate and benzine, the solvent portion being kept very low that penetration of the liquid may not be sufficiently deep to obliterate or blur the pattern. Great care must be exercised that the dye solution does not enter the indentations of the embossing. The applied color is always a dyestuff, in order that the transparency of the coat may not be affected. The dyestuff solution must be applied sufficiently light so that the color will not penetrate the folds of the embossing, but remain on the top entirely. It will be remembered that real alligator hide, monkey skin, and rhinoceros, elephant and hippopotamus hides are all darker on the surface than in the folds of the skin, and it is to further duplicate the natural appearance of these and similar skins that the embossed patterns are smootched as indicated above. There is no tanned animal

1. E.P. 11181, 1899. 2. E.P. 1695, 1867. 3. E.P. 18989, 1890.

hide where the under and protected epidermis is darker than the more exposed layers of skin, hence the smootching solution, as mentioned, is always darker than the color of the pattern to which it is applied. Bismarck brown, aurine, fuchsine and auramine are the dyestuffs principally used to produce these effects, all being readily soluble in amyl acetate. It is evident in a finely embossed pattern, hand smootching effects cannot be produced with as high degree of skill as where the pattern is larger and the embossing deeper. In the production of so-called "shimmer" and "sheen" effects, the smootching mixture is applied to the surface in the ordinary manner, and before the pyroxylin coating has had a chance to dry aluminum and bronze powders are sifted over the surface. After thorough drying, the non-adhering bronze is removed by brushing, leaving a peculiar superficial metallic appearance on the coated cloth.

Antique Leather, also called Spanish and mission leather, is used for mission furniture and other severe upholstery, and consists in the application of a colored pyroxylin-containing solution over deeply embossed artificial leather. As in the process of smootching, a dyestuff darker than the coated surface and dissolved in a liquid weak as a cellulose nitrate solvent is employed, but the process is directly opposite to smootching. In the latter, great care is taken that the dye solution shall remain on the surface and not penetrate to the folds of the embossing, while in the production of Spanish leather effects the opposite is desired, the solution being freely brushed over the embossing and allowed to penetrate the folds, and then with a dry cloth the dyestuff is entirely removed from the surface, after which the leather is allowed to dry. The object of this treatment is to give the impression of great age, and that the artificial leather had been subjected to long and continued wear, and this is apparently indicated by the worn appearance of the surface, the original color being entirely effaced and only recognizable in the folds, which has, of course, been turned darker by the deposits of dirt in the creases of the leather. Often pigments ground in fusel oil are substituted for dyestuffs, and two colors of very nearly the same shade may be ground separately and then but partially mixed before applying. This gives a streaked appearance, not unlike unequal wearing of the material, and heightens the supposed antique effect. The applied liquid must be low in pyroxylin solvent power, or the original coating may be attacked and the embossing partially effaced by the rubbing off of the superficial coat. A colorless final coating is seldom placed over the dye solution, as the gloss produced would tend to destroy the semblance of old age, which is the property desired. The use of badly worn or

mutiliated embossing plates is sometimes intentionally made use of in order to destroy the regularity of pattern.

W. Love [1] has devised a hand glove consisting of a long strip of material either in one piece or several pieces sewn together (Fig. 118) which is folded accordion fashion and sewn at the sides to form a glove. This has several loose finger bags without separate fingers, so that the user's hand may be readily transferred from one to the other, exposing different polishing and cleaning surfaces. The glove is held on the hand by means of an elastic wrist. Where considerable artificial or real leather is treated this way, a mechanical contrivance similar to that devised by Love has been found quite useful.

Uninflammable Artificial Leathers may be prepared by introducing an inorganic salt into the coating composition where large amounts of cellulose nitrate enter into the formula, and this process, which has been patented,[2] consists in preparing a solvent of methylated spirit, freed from water, methylated ether and a hydrocarbon such as benzene. This compound solvent is saturated with sodium tungstate or phosphate, alum or a similar body to render it uninflammable. Cellulose nitrate is then incorporated with the liquid, the mixture clarified by subsidence or filtration, castor or other oil added, and the finished preparation applied to the cloth in the usual manner.

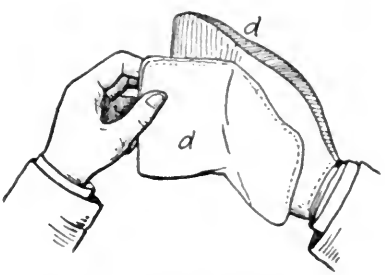

FIG. 118.—The Love Polishing Hand Glove.

Pantasote, an artificial leather containing no pyroxylin, is composed of boiled linseed and other oils, combined with pigments and is applied in a semi-liquid state to cloth and dried. The advantages possessed by this product is entire absence of rancid or other disagreeable odor, although it lacks the tensile strength imparted by the pyroxylin. It finds its principal use in upholstery and as curtains in railway cars.[3]

As a fireproof fabric,[4] cloth is woven with mule-spun weft and English crossbred worsted warp. After treatment with sodium silicate, phosphate or tungstate, the material is highly finished by calendering so that dust will less readily adhere to it. A thin cellulose nitrate lacquer may be finally applied to make the material further dust- and

1. E.P. 21535, 1900.
2. C. U. King and R. V. Jellicoe, E.P. 15686, 24695, 1893.
3. E.P. 9869, 1891.
4. W. H. and G. Bancroft, E.P. 24978, 1897.

water-proof. The cloth is especially intended for the clothing of operatives in gunpowder and other explosives factories, and in gasworks.

Deodorizing. The majority of the artificial leathers contain castor and other non-drying oils to impart flexibility. After having been heated to comparatively high temperatures during the drying of the several coats and in the process of embossing, the oil in the course of time turns rancid and imparts to the coated cloth well-defined and disagreeable odors. Where blown cottonseed and other oils are used, the presence of the sulphur gives rise to still more noticeably obnoxious smells. It was the odor, more than any other one factor, which limited the demand for the original Tannette, and caused the manufacturers to gradually reduce the sulphur to but a fraction of its original content.

As deodorizers, Stevens [1] has suggested sodium benzoate, sodium salicylate, β-naphthol, naphthol, zinc chloride, bromide or iodide,[2] and the carbolates and sulphocarbolates. In general, those volatile oils having a higher boiling point and slower evaporation than the acids liberated in the decomposition of castor and cottonseed oils, and which are not prohibitive on account of price, have been found most satisfactory. Included among these liquids are oil of amber, oil of cade and empyreumatic oil of birch. Oil of amber imparts an indescribable smoky smell to the coated cloth, quite pleasant and lasting. Oil of cade gives a juniper or gin-like smell, more pleasant and fugitive than amber. Oil of birch, known also as "Russia Leather Oil" is used in largest quantities for this purpose. In 1885, E. M. Freely [3] and P. M. Justice [4] independently called attention to the value of this product as a deodorizer and antiseptic, the former recommending a combination with alcohol and ether, while the latter obtained best results by mixing with tallow oil. The oil is mixed with the pyroxylin composition before coating, in the proportion of 2 lb. oil to 200–250 lb. mixture. It is readily soluble in fusel oil or amyl acetate, of a black color and tarry odor, the odor being very persistent even after the lapse of considerable time. Heavy and light camphor oil have been used to a more limited extent, and less so the oils of anise, bergamot, cajeput, cedarwood, cypress, light fennel, hemlock, origanum, and safrol. Oil of citronella enters into a large number of lacquer formulas and coating compositions in small amounts, for no very clearly defined purpose. Empyreumatic oil of juniper (oil of cade) was formerly employed quite extensively. Oils of vetiver and patchouly, although excellent, are too expensive.

1. U.S.P. 612066, 1898.
2. U.S.P. 612067, 1898.
3. E.P. 2158, 1885.
4. E.P. 7223, 1885.

The decomposition and rancidity are very materially hastened by storing the coated goods in a warm place away from the air, or tightly rolled where any rise of heat may be confined. Where raw cottonseed oil has been used instead of the blown oil, instances have occurred where oxidation in a confined roll has raised the surrounding atmosphere to the ignition point of the coating preparation and the roll has burst into flame.

As preserving or insecticide ingredients added to artificial leathers, textiles and furs, eugenol, *iso*eugenol, safrol, *iso*safrol, allyl malonate, diallyl malonate, styracin, benzyl acetate, indene, styrol, allyl cinnamate and cyclopentadiene have been proposed. They are introduced in the solvent portion of the formula, being usually soluble without difficulty in wood alcohol or amyl acetate. *Meta*nitro*para*cresol has been patented[1] for this purpose, and is readily soluble in acetone. Trioxymethylene (paraformaldehyde) dissolved in glycerol has been tried,[2] but the glycerol made the finished material sticky, and the formaldehyde vapors irritated the eyes of the workmen, especially in volatilizing the solvent immediately after coating. In feathers, skins and fur, spraying the coated article with a 1% alcoholic solution of mercuric chloride has been found beneficial, the alcohol dissolving the cellulose nitrate coating sufficient to render the antiseptic permanent. In cloth coating, the side opposite to the coat has been sprayed with α- or β-naphthol, α- or β-naphthylamine, naphthalin or cresol, but it is not customary to treat cloth in this manner, as it involves an additional distinct process through which the cloth has to undergo.

Decreasing Cost of Producing Pyroxylin Artificial Leathers. Forty-five thousand yards is a conservative estimate of the daily production of pyroxylin-containing imitation leather in the United States, and fifty thousand yards would be perhaps nearer the truth. The demand is steadily increasing, and therefore the problem of cheapening the cost without decreasing the desirable properties has been a problem of great interest and much thought. Keen competition and the steady advance in price of cotton cloth and pyroxylin solvents have given an added impetus to the subject. It is apparent that any decided reduction in cost must come either from the solvents employed or a decreased cost of the coating materials. The problem of solvent recovery is one of the most important. The successful search for a new and cheaper solvent does not look very encouraging at the present time. The development of synthetically produced fusel oil may materially affect the cost of the finished product, but from the experimentation which has been going on during the past few years, it has

1. E.P. 2667, 1897. 2. E.P. 22268, 1898.

become generally recognized that important reductions in cost must come from decreased cost of the coating material itself.

The waterproofing and elastic properties of pyroxylin make it desirable that the first and last coats shall contain cellulose nitrate, which is equivalent to saying that decrease in cost must be sought for in the intermediate or filler coats. The ideal filler must be a material soluble in a cheap solvent, the least expensive being water, and at the same time readily soluble in the solvents of pyroxylin, preferably amyl acetate. If the inner coats could have an aqueous base, and the solids still be soluble in amyl acetate, the superimposed coat would penetrate the aqueous filler, and attach itself to the primary or nitrocellulose layer, the latter being in contact with the cloth. Up to the present time no inexpensive substance soluble both in water and amyl acetate has been found. Of the water-soluble commercial products which have been proposed (glucose, dextrin, acacia, ghatti, tragacanth), none are soluble in the paraffin alcohols or the acetates derived from them. Next in point of cost of water is perhaps benzine. In an ideal coating it is necessary that the water or benzine used in the inner layers be solvents, but conversely that the pyroxylin solvents shall dissolve the inner coats in order to penetrate entirely through the latter and become affixed to the primary pyroxylin-containing layer.

The solubility of both gelatin and pyroxylin in strong acetic acid has been made the basis of several processes, but it has been found that the fumes of the acid so attacked the machinery and eyes of the workmen as to make the method inapplicable commercially. Byron B. Goldsmith has been granted protection[1] for a process where the intermediary layers are partially vulcanized oils, the so-called rubber substitutes. Generally speaking, the vulcanized oils, although possessing flexibility, are very deficient in tenacity, and a film has no strength. If the vulcanization be carried too far, the material becomes insoluble in all known solvents. Goldsmith proposes to take corn oil, vulcanize it in the usual manner with sulphur chloride, and then prepare a solution of pyroxylin and vulcanized oil, preferably by separately dissolving before mixing. The low sulphur-containing vulcanized oils are readily soluble in both benzine and amyl acetate. The more refractory oils may, according to the patentee, be brought into solution by prolonged action of the solvent, especially at elevated temperatures. The gloss and finish of the resulting compound may be modified within rather narrow limits by a selection of the oil to be vulcanized. The coating of sulphurated oil is then applied in the

1. U.S.P. 841509, 1907.

ordinary way. Samples prepared according to Goldsmith's printed process, while very flexible and otherwise satisfactory, do not have the strength required by the trade.

Stephen Meers [1] seeks to reduce the inflammability and at the same time cheapen the cost of production of this kind of leather while still retaining substantially all the desirable characteristics, by applying a pyroxylin coating to a fabric to produce a waterproof base, then spreading on this foundation layer after calendering, a linseed oil varnish with pigment, but containing no nitrocellulose. The pliability is increased by the presence of a small amount of gutta percha. In the former patent the expense is said to be reduced by the employment of corn oil, and in the latter by linseed oil.

Artificial Chamois Leather containing pyroxylin is limited to chamois intended for underwear, vests and other apparel where the closeness of the fiber is the main desirable requisite. Although chamois containing the nitrocelluloses can be produced of any desired degree of pliability, the receptive nature to water is destroyed by the pyroxylin present. J. Hothersall [2] has attempted to produce a cotton cloth to take the place of chamois, and applicable for wet or dry cleaning, or for polishing purposes, and for underclothing and linings by weaving a cloth with warp threads dyed yellow, preferably with chrysophenine or curcumine, and a soft spun, undyed weft. An acetic acid solution of collodion containing sufficient lanolin to impart the desired flexibility is sprayed on the cloth, which is dried and passed through a warm bath containing Turkey-red oil to improve the softness. With the method of L. Thiry [3] sheep skins are heated together for a few days in a hermetically sealed chamber. Fermentation ensues, the chamber being artificially heated during the fermentative period. The hides after removal are spread out to absorb moisture, rolled, fulled, treated with an oil as castor, all moisture removed by gently drying, a methyl alcohol solution of pyroxylin added, and the material dried with continual movement to obtain a soft feel to the leather. It is said this product is excellent for polishing purposes. Where the polishing effect is to be heightened, a small amount of rouge, putz, emery or other similarly acting abrasive may be incorporated with the pyroxylin solution before application to the hide.

Artificial Sole Leather. Attempts to prepare sole leather artificially which will still retain the desired tenacity and wearing qualities when wet, have as yet not been entirely successful. Leather waste is usually torn up by a shredding machine, and mixed with a

1. U.S.P. 837700, 1906; F.P. 369320, 1906; E.P. 18499, 1906.
2. E.P. 9659, 1897. 3. E.P. 9889, 1892.

water-insoluble adhesive, as pyroxylin dissolved in wood alcohol and amyl acetate. The composition after thorough mixing is placed in trays or molds of the required size, a portion of the liquid evaporated spontaneously or aided by a gentle heat, and further compacted by hydraulic pressure between heated steel plates and finally completely dried. For some purposes the boards thus prepared are covered both sides with a thin strip of split leather. In this instance, the leather is laid in the trays and other pieces placed on top of the pyroxylin mixture before the pressure is applied. The principal disadvantage to the artificial product is poor wearing qualities, especially when exposed to continued dampness, and the absence of the "life" or resiliency of natural leather, which acts in a measure as a shock absorber in walking. In a recent French process[1] ramie fibers—very tough and elastic—are combined with pyroxylin, with or without the addition of camphor, and with the addition of a quantity of resinifiable oil to decrease the porosity, and increase the water-repellent properties.

Artificial Split Leather. In 1878, B. James devised a process[2] for the manufacture of split leather by taking the "skivings" or "jumpings" of sole leather, grinding them to a very fine powder, and mixing the powdered material with water. Adhesive matter was added to toughen the composition, but the finished material lacked strength, and little appears to have been done in the matter of placing the product upon the market.

As a result of the experiments of William Walden of New York, there was granted to him U.S. Patent 656869 under date of August 28, 1900, for the production of an artificial coating very closely resembling split leather. In describing his process, Walden says "this invention relates to an improved artificial leather or leather substitute especially adapted as an inner soling material for boots and shoes, and it has for its object to provide a material which will strongly resemble 'split' leather, but at the same time be less expensive to manufacture and much superior to the ordinary split leather now generally employed in the manufacture of inner soles, in that it is waterproof. It, therefore, is capable of preventing moisture from passing through, and is provided with an absorbent coating to take up the moisture from the feet. Furthermore my improved compound is much stronger than ordinary split sole leather, such as is generally employed in the manufacture of inner soles in shoes. The serious objection to split leather soles is the liability of the latter to curl and break." The *modus operandi* of the process is to take a sutiable base or body sufficiently flexible and yet strong, as heavy duck or drill or the heavier and more

1. F.P. 375564, 1907. 2. E.P. 2089, 1878.

closely woven grades of burlap, and coat one side only with a pyroxylin castor oil composition similar to that used in artificial leather products, the coating being applied very heavily, and being of the color of leather. Such a coating is practically waterproof. The burlap to be coated is first dried, and then passed through a coating machine where a heavy composition is deposited on it by means of blunt knife edges. The coating composition must be sufficiently fluid so as to readily penetrate the fiber of the cloth, and the object of the preliminary drying is to increase the penetration. Just after the moist coating has left the knife edges, and before it has had an opportunity to dry, the cloth passes under a sieve which deposits a heavy uniform coat of powdered leather dust, the mesh of the sieve being preferably 50 or 60. Immediately after receiving the leather dust, the cloth passes between iron rolls to press the leather dust into the moist pyroxylin and then over drums heated to 75–80°, where, after thorough drying, the superfluous leather dust is removed by brushing and the finished material leaves the machine. To give increased rigidity to the leather, the reverse side may be coated with a pyroxylin or other composition. The split leather is cut into sizes as used. If it is desired to stiffen the cloth, a coating of starch paste or water glass may be applied to the reverse side after drying.

For the manufacture of heavy soles, two pieces of burlap may be first united by a pyroxylin cement, and the leather dust coating applied to one surface. The success of the process consists in the uniformity with which the dust is deposited on the freshly coated surface, the fineness and freedom from moisture of the same, and the quickness with which the dust passes over rollers after being sprinkled. W. H. Smith improves the elasticity [1] by adding Chinese wood-oil (Tung oil) and stearic acid with the cellulose nitrate, best results having been obtained from the following ingredients: tung oil, 5%; acetone, 50%; nitrocellulose, 20%; pigment, 12%; pulverized leather, 10%. The composition is best prepared by dissolving the nitrocellulose in the acetone, then add the wood oil, pigment and leather in the order named, and aid solution by a gentle steam heat. The liquid portion of the formula consisting entirely of acetone, would be much more expensive than necessary, and such a coating composition would be very prone to turn white and peel off the cloth, unless great precautions be taken to exclude the normal moisture from the atmosphere. It is evident that this inventor's product is not an imitation of split leather, for the pyroxylin admixed with the leather will impart a gloss to the surface of the coating, while with real split leather, nothing

1. U.S.P. 837351, 1906.

but the frayed and jagged edges of the leather is noticeable. With Walden's process, the imitation is a very good one, and the material produced is quite flexible and has excellent lasting qualities. The leather dust may be replaced by other light fluffy materials such as ground sponge, cork, sawdust, hair and hemp. Cotton and woolen flock has been applied to cloth in imitation of Canton flannel, combed wool to imitate mohair and camel's hair, while cocoanut fiber has been finely shredded and used as doll's hair, and the fur of animals in inexpensive toys. Some combination of cellulose nitrate may form the binding material. "Vellum Cloth"[1] is felted fibers intermixed with pyroxylin and attached to a backing or drill or duck cotton cloth.

It has been proposed to produce sand and emery paper on the above principle by sprinkling sand or emery powder on a moist pyroxylin surface, but in point of cost such preparations have up to the present not been able to successfully compete with the regular articles. Emery wheels built up of successive layers of similar material have been manufactured, but they have shown the same increase cost of price.[2]

Artificial Patent Leather.[3] The composition of pyroxylin-containing mixtures intended for patent leather finishes is given under patent leather. All attempts to produce a satisfactory preparation on cloth have failed, due to the fact that the weave of the cloth will show through the coating, irrespective of the opacity of the coating material, and seemingly of the number of coats applied. That is, if a sufficient number of coats are used to obscure the weave of the cloth, the added material is so heavy as to be prone to crack, and conversely. The gloss may readily be obtained, also a fair amount of elasticity and strength, but when a piece of finished cloth is held to the light and closely examined the individual weaves may be counted, especially if the goods be placed under moderate tension. Usually cloth stretches more in one direction than in another. Sateen is an exception to this, the weave and weft being woven of the same material and with equal tension. Therefore sateen has been found most satisfactory as a cloth backing. In the preparation of this class of goods, the preliminary coat, which is high in linseed oil, after thorough drying is calendered in order to remove any "pinholes" formed by too rapid evaporation of the solvent, and to present as smooth a surface as possible, to cover up the texture of the cloth. The composition is applied with a coating machine in an entirely analogous manner to the manufacture of artificial leather, the final coat being quite fluid and practically flowed on in order to produce the brilliant gloss required. The lack of success of cloth-coated patent leather appears to be due primarily to the weakness of

1. E.P. 12553, 1898. 2. See Chap. XIV. 3. See Patent Leather, Chap. XII.

the backing, the strength of the pyroxylin being unable to entirely overcome this. The demands of a patent leather for shoes are exceedingly rigid, and have never been satisfied by cloth-coated preparations. The earlier attempts were confined to the attachment of lustrous films to cloth. A linseed pyroxylin coating was spread on smooth glass plates, the solvent allowed to evaporate spontaneously, the film detached, and the side not in contact with the glass affixed to the cloth by means of a pyroxylin cement, aided by heavy rollers. The patented process of F. C. Jeune[1] consisted of spreading rubber solution on cloth, drying, vulcanizing and then applying a japan varnish. That of A. P. Roger[2] required a double fabric with one face woven with a fine warp and weft and the other face with considerably coarser material. The two surfaces were connected by fine threads, and successive coats of varnish applied until the satisfactory result was obtained. These processes are now obsolete, the imitation patent leather being produced at the present time, consisting of either a pure linseed oil coat or one high in pyroxylin. Such material is not used for shoes, except in the "tips" of ladies' cheap shoes, but the use is confined almost exclusively to carriage and harness goods, dashboards, interior buggy work, and horse collars and trimmings of harness. These uses, which are still limited, are apparently not increasing.

Quite recently G. R. de Montlord has devised a process of making an artificial patent leather[3] by combining a soluble pyroxylin with solvent, vegetable oil, turpentine and color in the usual manner, but a film is first made of the mixture by allowing the fluid to evaporate from the surface of a polished glass plate. The fabric is moistened with a solvent (as acetone or ethyl acetate) and by means of a calender or similar friction rolls the film is attached to the cloth. In this manner, it is claimed, the appearance of the structure of the underlying cloth does not appear, and the finished coated cloth has great durability and elasticity. Instead of a glass plate, Ker[4] uses flotation of the pyroxylin solution on water, but experience has demonstrated that films prepared in this manner dry opaque, due to moisture absorption, and this opacity cannot be completely removed subsequently by moistening the film with solvent.

Carriage-Top Cloth. Under this name there is produced a pyroxylin coated cloth, which is either high in castor oil to increase the flexibility, or india rubber in conjunction with pyroxylin forms the coating composition, it having been found that an entirely cel-

1. E.P. 500, 1857.
2. E.P. 49, 1859.
3. U.S.P. 928235, 1909.
4. U.S.P. 848301, 1907.

lulose nitrate solution, when dried, does not possess sufficient elasticity to hold the form of the embossing or prevent cracking when the cloth is tightly creased, or when exposed to the elements in cold weather, especially to alternate freezing and thawing. The cracking is especially conspicuous in those folds which form when the top is turned back. In order to combine the resiliency of the rubber with the tensile strength of the pyroxylin, it is customary to first apply a pyroxylin coat, then an intermediate coat of rubber composition in benzine and amyl acetate, and then follow with the top and last coat of pyroxylin with but little vegetable oil added. Rubber may be partially or wholly replaced by the chlorosulphide rubber substitutes,[1] resulting in the production of inferior material as regards strength and lasting qualities, the decrease in strength being directly proportional to the amount of replacement of india rubber by the substitute. Those compositions high in the boiled oils linseed and cottonseed, in conjunction with pyroxylin, produce very serviceable coatings when applied to heavy canvas, duck and drill. In the cheaper preparations, various amounts of rosin have been added in the intermediate coats. This often becomes evident from the crystallization of the rosin on the outside of the coated cloth as a fine white efflorescence, which may be removed, as stated, by wiping the surface with a cloth wetted in benzine.

Imitation Cork. A process has been devised by E. Hermit[2] whereby a composition applicable as a substitute for natural cork in the manufacture of linoleum may be produced with the aid of collodion. Three parts of natural powdered cork are mixed with one part of collodion (preferably consisting of 5 parts nitrocellulose, 20 parts alcohol and 75 parts sulphuric ether) the product obtained dried, and then compressed by hydraulic or other means. After thorough

1. The modern rubber substitutes, known also as factis, surrogate, and by other names, have been the subject of innumerable patents, a large number of which have as a basis some of the fatty oils, preferably mustard, rape, cottonseed, and corn. Of these fatty substitutes, there are recognized in commerce three varieties, namely, "white," "brown," and "blown oil," the latter being the most important. They are insoluble in the usual solvents. The blown oil products are prepared by the action of sulphur chloride (15–20%) on the respective oils at low temperatures, the temperature of the chloride and oil being below 15° at the commencement of the operation in order to insure the formation of light-colored products. If the oil be treated with smaller amounts of sulphur chloride (3–6%), liquid or semi-solid bodies result which are soluble in benzine, amyl alcohol and amyl acetate, and which therefore are applicable as filler coats in the inexpensive artificial leathers containing pyroxylin. Any material is suitable as a filler coat which is at the same time soluble in a solvent of pyroxylin, and which therefore allows the upper pyroxylin coats to penetrate the filler coat and thereby anchor. These blown substitutes are also known as "floating substitutes," because they float on water, although they contain large amounts of barium sulphate and magnesia and have a density of about 1.5. The entangled air in the spongy texture causes the mass to float.

2. E.P. 6173, 1905.

mixing by kneading, the composition is placed in suitable molds, in which it is dried by the passage of a current of warm air. A solution of pyroxylin in glacial acetic acid is made, and with this adhesive, the film of pyroxylin-containing cork is made fast to the burlap backing. Various patterns may be impressed by means of a printing press and aniline dyestuffs soluble in amyl acetate, wood alcohol, acetone or any liquid that at the same time is a solvent of collodion, which will allow of the penetration of the color into the collodion matrix. The product may be further cheapened, it is said,[1] by substituting for the linseed or other drying oil usually used in conjunction with the cork, a mixture of resin, casein and lime melted together. It is stated that the material so produced is better able to resist acids, and moreover is not as easily affected by fire.

Some of the disadvantages of corks made from the natural bark are their porosity, whereby they leak, and admit air when used to stopper bottles containing chemicals affected by the atmosphere. Furthermore they are absorbent, and the many porous holes are quite apt to drop cork dust into the container in which the cork has been used as a stopper. At least two processes are now in successful operation for the preparation of an artificial cork in both of which pyroxylin enters as the important ingredient. The corks produced from cork shavings, dust or ground bark with glue, sodium silicate or other body miscible with water, have never gone beyond the experimental stage on account of their ready solubility in water, and the ease with which they are attacked by chemicals. In the process of H. Coale[2] cork cuttings or waste are reduced to a uniform granular condition, which is then packed into a vessel having the shape of an inverted truncated cone, with a base of wire gauze, and a hinge cover at the other end. This vessel is first immersed in a bath of 50% sulphuric acid, which dissolves much of the impurities, washed until neutral, and the hinge cover then raised, when the particles of good cork will float out on the surface while the heavy and inferior particles remain in the vessel. The floating cork is removed, perhaps bleached, dried, and mixed with a heavy pyroxylin solution in which the solvent is of low boiling point, as commercial wood alcohol or acetone. The mass is then molded and the solvent removed by heat.

Another method[3] depends on the utilization of cork pith, cocoanut shells or cinchona bark in which the alkaloids have been previously extracted, pyroxylin being the agglutinating material. The pasty

1. J. S. Ammundsen and E. A. Rasmussen, E.P. 11526, 1900.
2. F.P. 366586, 1906.
3. G. C. de Brialles, F.P. 364641, 1906; E.P. 3013, 1906; Smith, Morrison and Schindler (E.P. 25324, 1902) use cornstalk pith.

composition is pressed into glass-lined molds, provided with very small apertures for the escape of the vapors of the nitrocellulose solvents. The finished cork may be superficially denitrated by the usual reagents in order to reduce inflammability. The chemicals of Kahlbaum, König, and Marquardt, as exported to the United States, are contained in bottles closed with cork dust stoppers of this description. They are practically non-porous. It is claimed that a final dipping of the cork into an alkaline solution of tungstic acid and subsequent exposure to light increases their water-resisting properties.[1]

In imitation of a woven fabric, cork mixed with an agglutinant as pyroxylin,[2] made into very thin sheets and dried, and then attached to a linen backing, is sprinkled with a thin layer of flock or wool or cotton. This when applied to the surface of the compound fabric, especially if a portion of the flock be the floss of silk, is stated to produce very unique and pleasing results.

In the manufacture of floor cloth, linoleum, corticine, cere-cloth, linerusta walton and similar materials, the cost of pyroxylin has precluded its use.

Imitation Furs. The value of a chinchilla skin depends upon the altitude in which the animal was captured, the higher the altitude the greater value of the fur, and conversely. As the altitude increases, the fur has a soft purplish tint at the extreme ends of the long hairs, so that when the fur is examined by blowing, the inner portion next to the skin may be dark gray, while the extreme tips take on a purplish cast. In the warmer climates the valuable purple tint is replaced by a yellow hue, which decreases greatly the commercial value, so that a yellow skin may be one-third the value of one of equal size procured from the highest altitudes. To simulate the more costly skins, the yellow fur is bleached with sulphur dioxide or hydrogen dioxide, and after drying, a solution of Grübler's hexamethyl violet dyestuff, dissolved 2% in a bronzing liquid, is sprayed on the fur by means of an atomizer or the tips of the longest hairs are gently touched with the solution by means of a soft brush. The fur is then brushed constantly while being dried in a warm room. In this manner it is possible to apparently double the value of these costly skins. Hexamethyl violet imparts a peculiar "bloom" to the skin, much like the natural appearance.[3] An imitation of beaver or nutria fur[4] is

1. See also "Manufacture of Cork Fabrics." R. Grimoin-Sanson, E.P. 14383, 1904; The joint solubility of pyroxylin and casein in glacial acetic acid is used in the impregnation processes of H. Nelbing (Chem. and Druggist, 1904, **64**, 189) and H. Ensminger, E.P. 3045, 1903; F.P. 326576, 1902; abst. J.S.C.I., 1903, **22**, 817.
2. Phillips, Lebel and Grimoin-Sanson, E.P. 14420, 1901.
3. F. Canard, E.P. 2114, 1876.
4. J. Biermann, E.P. 4062, 1896.

obtained by the treatment of lambskins in the following way: The skins are placed in a bath of soap and water, pressed out and brushed with a solution of dye, pyrogallic acid, hydrogen dioxide and ammonia. After drying, the skins are combed out with a wire comb which is frequently dipped in a 4–6 oz. pyroxylin solution to give body and rigidity to the individual hairs, or if a silky gloss is required they may be ironed and then blown out with an air blast, which separates each fiber.

Pile fabrics in imitation of the skins of animals, for ladies' wear carriage rugs, and similar material, are provided with a backing of a nitrocellulose-containing composition.[1] The pile when dyed and tipped may be made to resemble the hair of various animals. To prevent injury to artificial sealskin fabrics by wet, the yarn employed in their manufacture is waterproofed before weaving,[2] a very thin—from 2–3 oz.—solution of a light flow of pyroxylin giving most satisfactory results. The Lewinsohn method of imparting to common furs the appearance of more costly ones[3] consists in applying a lacquer similar to "Zapon"[4] to the tips of the hair by "dabbing," the long hairs being thoroughly treated. By this method common furs may be made to resemble the silver fox and other costly skins by adding aluminum or bronze to the lacquer used for tipping,[5] whereby a silvery or gilt appearance is obtained.

Imitation bearskin is usually prepared from muskrat or raccoon skin.[6] Where small articles are produced, as in the manufacture of caps and the backings of gloves, the skins are dyed and formed into a cap or back with the skin so arranged that the hair stands upward, then treated with linseed oil containing pyroxylin. Without allowing the composition to harden, the skins are brushed, and trained in the opposite way to its natural inclination, causing the hairs to fall down and stand straight out from the cap or glove in imitation of the real bearskin. Artificial fur tails are produced by placing the hairs of narrow strips of the furs between the jaws of a clamping device,[7] and removing the skin with a shaving tool, a layer of heavy lacquer being applied to the ends of the roots. After drying, the hairs are removed from the clamped frame, and the hair band wound round a cord to form a tail in the ordinary way. Another method, according to the originator, S. Lewin, consists in arranging alternate strips of woolly

1. H. Lister, E.P. 122, 1891.
2. S. C. Lister and J. Reixch, E.P. 7830, 1884.
3. M. S. and J. Lewinsohn, E.P. 5674, 1893.
4. E.P. 15967, 1892.
5. J. F. and J. G. Mathias, E.P. 3766, 1875.
6. H. C. Müller, E. P. 556, 1862.
7. E.P. 28143, 1904.

and non-wooly furs without removing the skin; the wooly support the non-wooly hairs, and at the same time produce artificially the "under wool."

Artificial Feathers. Imitations of eider down and other small feathers are possible by applying to a pyroxylin-coated cloth or canvas, waste cotton or woolen flock, or disintegrated or shredded feathers, which are caused to adhere more firmly by being passed under rollers immediately after being brought in contact with the pyroxylin layer.[1] This material finds use in linings of coats, the inner lining of rubber boots, and as inexpensive material for padding comfortables and outer garments. In the preservation of ostrich and other feathers, a thin pyroxylin solution is usually sprayed over the feather after dyeing and curling, but great care has to be exercised in incorporating in the pyroxylin solution the correct amount of castor oil, or the feathers will straighten out or further curl up when the solution dries. Pyroxylin covered feathers are practically impervious to moisture and to the varying conditions of the atmosphere. The life of the feather is greatly increased, and dirt may be readily removed by careful washing in lukewarm. water. A pyroxylin-coated feather requires to be first immersed in wood. alcohol and amyl acetate before re-dyeing. The weight of pyroxylin deposited must be so small as not to affect the "droop" of the plumage. Heavier pieces, wings, and entire birds are immersed, and during the process of drying, lightly brushed in order to remove the tendency to glaze and assume a polished appearance. Differential dyeing of plumage is made possible by first applying a cellulose nitrate lacquer, drying, and then painting on the various colors by hand. This process is followed by another coating of lacquer to waterproof the material, and prevent the spreading of the colors upon moistening. In this manner, the plumage may be made to resemble that of a more expensive bird. Considerable thought has been given to this industry, with the production of brilliant and artistic results. At the present time "willow plumes," which are ordinary ostrich feathers, of which the individual "barbs" are made several times longer than they grow in nature by deftly knotting on other barbs by hand, are very fashionable. In this manner it is possible to produce a plume with a droop of at least two feet. Whereas formerly the barbs were attached to each other by hand tying, now they are fastened together by means of a tiny drop of a pyroxylin solution. In this manner knotting is obviated and a more natural appearance of the feather results. The fragile nature of the tied barbs and their

1. R. Wolffenstein, E.P. 11712, 1903.

proneness to drop off has been lessened by this nitrocellulose cementing in place of hand knotting.

An ingenious use for small pieces of various feathers, down, and feather clippings has been devised. These are made into an imitation of eider down which is used quite extensively as lining for ladies' cloaks. The feathers are first run through a cutting machine where they are reduced to small pieces of uniform size. Heavy sateen or moleskin cloth is tightly stretched on a frame, and a composition similar to the following brushed thickly over the surface of the cloth with a flat brush. Amyl acetate 45 (parts by weight), amyl alcohol 10, commercial 98% wood alcohol 15, and benzine 30, in which is dissolved 8 parts pyroxylin and 6 parts castor oil. Often the mixture is made more nearly like the color of the feathers by the use of a small amount of white pigment, which is ground in the lacquer. The cloth is heavily coated with the pyroxylin, when the small pieces of feathers and down are lightly strewn over the surface, and the cloth immediately passed through rollers, which firmly fixes the feathers. After drying, they are lightly brushed up with a soft brush. An additional advantage of this material is that the pyroxylin has made it waterproof, and it is also said to make a very warm, and at the same time durable lining material.

India-Rubber Substitutes. Of the many products which have been evolved as substitutes for india-rubber and gutta percha, none of which have as yet been entirely satisfactory, the preparation of A. Nobel[1] is of considerable interest theoretically, from the great strength of the film produced. The product, which resembles transparent celluloid in appearance, consists of a nitrated cellulose, oxycellulose, or hydrocellulose, combined with a non-volatile or only slightly volatile solvent, such as nitronaphthalene, dinitrobenzol, nitrocymene, nitrotoluol, nitroxylol or nitrocumol, either alone or together. The cellulose nitrate is masticated with the solid solvent by means of heat, usually assisted by pressure, and the semisolid but plastic mass rolled into any desired form. Claessen[2] gelatinizes collodion cotton with tetrasubstituted ureas or sulphoureas, whereby a small degree of pliability is attained. Mixtures of rubber in alternate layers with cork dust agglutinated with a heavy pyroxylin solution have been used to form solid tires, as well as the heels and soles of shoes.[3] They are said to wear longer than rubber soles, are equally as water repellant, and the injurious effect of rubber on the feet is partially avoided. B. B. Goldsmith[4] has claimed a composition as a substitute for rubber,

1. E.P. 20234, 1893.
2. E.P. 21493, 1906; F.P. 388492, 1908.
3. K. Lengfellner, F.P. 396814, 1907.
4. U.S.P. 841509, 1907.

consisting of a mixture of pyroxylin with a vulcanized non-drying oil (maize oil) or drying oil or both.

Velvril, first patented by Reid and Earle in 1895 [1] and more completely described by the former in 1899,[2] consists essentially of nitro compounds prepared from linolein or ricinolein by subjecting such oils as linseed and castor to the usual processes of nitration with nitric or nitro-sulphuric acids, or to the action of a current of nitrous oxide gas. The semisolid product formed is purified by mixing at 95° with chalk until neutral, and then allowing the solid matter to subside. The nitro compounds thus purified, when mixed with varying proportions of nitrocellulose, yield substances similar to ebonite or vulcanite, and a soft elastic substance similar to that used for inking-rollers. When dissolved in the usual lacquer solvents the solutions produced are said to be suitable for artificial leather coatings. Three years later E. Kingscote [3] obtained protection for a process of combining nitrated castor oil with chrome-tanned felt. In 1903 Reid [4] published his process of applying velvril to the production of artificial leather, and later in the same year the Velvril Company and Howkins [5] described their special coating machine for accomplishing this to the best advantage. It is recommended to preferably mix "3 parts nitrocellulose with 2 parts nitroricinolein, and dissolved in 12 parts of acetone. The flexibility of the material is increased by adding from 2–5% of castor oil." Fibrous material such as felt or wool is impregnated with this mixture and dried, when it may be waterproofed by a further impregnation with a compound of paraffin wax and a mineral oil, 0.93 sp.gr., combined with quicklime, the whole heated to 300° F. To produce a hard material the fibrous substance is treated with an aqueous solution of a chromate or bichromate which is subsequently decomposed by a reducing agent as sulphurous acid. The nitro compounds of castor and linseed oils contain from 4–5% nitrogen, that from castor oil being preferable. Velvril is said to be no more inflammable than india-rubber, insoluble in benzene and carbon bisulphide, and to soften at the temperature of boiling water so as to admit of ready molding.

Oxolin is a patented preparation of oxidized linseed oil, intended, among other uses, for the manufacture of artificial leathers in conjunction with pyroxylin. In elasticity and strength it is much inferior,

1. W. F. Reid and E. J. V. Earle, E.P. 21995, 1895; D.R.P. 96365, 1896.
2. J.S.C.I., 1899, **18**, 972.
3. E.P. 10432, 1898. See A. Hill, E.P. 8076, 1901; C. Hellriegel, E.P. 22186, 1899.
4. E.P. 3485, 1903.
5. E.P. 27202, 1903; for preparation of "linoleum Apyrofore" (incombustible linoleum) see F.P. 382279, 1907.

and the luster superior to india-rubber, although possessing more strength than the chlorosulphide oils (rubber substitutes). The "perchoid" of H. Hart [1] is said to be the same as oxolin.

Pyroxylin Waterproofing Compositions. The first attempt to apply the cellulose nitrates for purposes of waterproofing, and which met with any considerable practical success, appears to be the compositions of Parkes [2] who used methyl alcohol and a collodion of light viscosity, to which petroleum naphtha was added to decrease the cost. Berard impregnated felt with collodion; [3] Rollason [4] produced his waterproof tissue [5] by the addition of Canada balsam to the pyroxylin. Other materials used in conjunction with collodion were kauri,[6] isinglass,[7] dried seaweed,[8] linseed oil,[9] bituminous matter,[10] metallic soaps,[11] gutta percha,[12] and glue. The experiments of John Macintosh [13] led to the covering of cloth with pyroxylin, and when made into rain coats with rubber, was called "macintosh material." His process consisted in saturating fleeces or batts of cotton with collodion, usually colored with pigments, the fleece being passed through the collodion bath and then between rollers and dried. Subsequently india-rubber was combined with the pyroxylin, and linseed and other drying oils added. The Jones method of waterproofing, applied extensively to shot-gun cartridges, paper shells and cartridge cases, consists in dipping the heavily rolled paper in a solution of pyroxylin containing 30% carnauba or beeswax, after which the paper passes over friction rolls to impart a gloss.[14] Barnwell attained considerable success with his composition containing shellac,[15] but the tensile strength decreased with an increase of water-repellant properties. These earlier efforts failed to meet with permanent success, with the possible exception of the compounds of MacIntosh, due to the fact that attempts were made to apply the compositions to uses unfitted for this class of preparations. This was especially noticeable in the artificial sole and split leathers, the uppers of boots and the unsuccessful attempts to produce heavy belting. The primary defect appeared to be the loss of elasticity and hence deficiency in lasting qualities, where sufficient of the material was applied to make the waterproofing thorough and permanent. The Kamptulicon of Henson,[16] a fabric coated with a

1. E.P. 2868, 2869, 1898.
2. E.P. 2359, 1855; 1125, 1856.
3. E.P. 639, 1858; consisting of "azotic cotton" 17.5, ether 42.5, castor oil 35.5, coloring matter 4.5 (parts by weight).
4. E.P. 1883, 1857.
5. E.P. 2849, 1858; 945, 1859.
6. E.P. 734, 1859.
7. E.P. 2293, 1859.
8. Rhodes and Syme, E.P. 2384, 1860.
9. E.P. 2249, 1860.
10. E.P. 1313, 1865.
11. E.P. 1765, 1883.
12. E.P. 3447, 1872.
13. E.P. 2789, 1859.
14. E.P. 2542, 1865. Disclaimer filed Nov. 11, 1871. See also Pegamoid.
15. E.P. 2249, 1869.
16. E.P. 232, 1863.

collodion-containing material, and confined to the manufacture of horsehair seatings and netted fabrics, had an extensive sale in England in the early seventies of the past century. The product known as Gloria, and Glorid, are waterproofed products upon the Kamptulicon patents of Henson noted above. Oblasser and Theryc [1] extended the range of usefulness by introducing cork, whereby materials similar to linoleum resulted, or asbestos with the idea of partially fireproofing the finished article. The Textiloid of Cadoret [2] was a plastic incombustible material, obtained by the combination of collodion with "resinolines." [3] Townsend Goods [4] consisted of glazed and unglazed calicoes, linens, shirtings, jaconets and other fabrics, rendered semi-transparent and waterproof by saturation with collodion containing hydrocarbon oils to the point of precipitation of the cellulose nitrate. If the oil was in excess, adhesives as surgical plasters resulted. Combined with metallic soaps, medicinal preparations as lead plaster are formed, in which various ointments, metallic stearates and oleates, antiseptics and curatives may be incorporated. Schwamm [5] produced a resilient moisture-proof lining for garments, by coating a perforated woven fabric with collodion, the fabric having previously been made from yarn similarly coated. The application of the coating to the knitted goods partially softens and dissolves the material originally deposited on the yarn and makes the waterproofing very complete. Clark's process,[6] not intended for flexible goods, owes its efficiency to the combining of pyroxylin with a fusel oil solution of the soft amber resins. Williams [7] prefers to first apply an ammoniacal copper oxide solution, dry, dissolve out the copper with weak acid, and then treat with pyroxylin. By this means, the inventor claims, the pores of the cloth are closed by the cellulose-dissolving properties of the ammoniacal copper solution. Such prepared goods are of a light green color, due to the difficulty of removing the last traces of the copper, the acid being used sufficiently dilute so as not to attack the fabric. Van Winkle and Todd [8] advocate the combination of isinglass with pyroxylin, acetic acid being used as the combined solvent, but experience has demonstrated that unless the former be rendered insoluble by the subsequent application of formaldehyde or by introducing a bichromate with the isinglass, the finished material is deficient in waterproofing

1. E.P. 19242, 1892.
2. E.P. 12451, 1896. See Cie. Gén. de Chromolithie, E.P. 466, 1883.
3. Resinoline is a name applied by the inventor to the products resulting from the saponification of vegetable oils by metallic carbonates, and afterwards treated with nitric acid and neutralized.
4. E.P. 2249, 1860; 2972, 1871.
5. E.P. 4631, 1898.
6. E.P. 5152, 1887.
7. E.P. 5344, 12309, 1889.
8. E.P. 20690, 1890.

qualities. Fahrig's preparation[1] is intended especially for acid and waterproof containers, battery cells and electric and other conduits. The pyroxylin is treated with sodium carbonate or silicate after pulping and while still wet, borax, sodium acetate, and ammonium phosphate are added. The pulp is then run on a paper board machine, where the insulating portion (mica, talc, magnesite, ozokerite, etc.) is sifted on. Finally the material is pressed into sheets and castor oil added if flexibility is required. In the waterproofing of wood, coal-tar hydrocarbons and cresols are at present used entirely, on account of their low cost.[2] Imitation cedar wood in the shape of chests is to be found on the market. They consist of any inexpensive soft wood, dyed the color of cedar by means of Bismarck brown or similar dyestuffs, and brushed with a pyroxylin solution containing 15–30% oil of cedar. The dried pyroxylin film retains sufficient of the cedar oil, it is claimed, to impart for many years the odor of cedar to the receptacle. For boxes and compartments intended to be moth and insect proof, the inside is brushed with a pyroxylin solution containing β-naphthol, mercuric chloride or other insecticide.

In the treatment of stockinette and like porous and elastic fabrics, Oliver[3] first applies to the surface a transfer paper coated with pyroxylin, the paper being afterward washed away. A second layer of fabric is then applied, pressure exerted, and a material obtained consisting of a waterproof film faced with fabric on both sides. Another method[4] depends for the impermeable coating upon a combination of pyroxylin with wax and magnesium chloride. Oliver[5] impregnates the individual threads with celluloid before spinning, whereas La Grange[6] obtains best results from pontianac gum in addition to the cellulose nitrate, with[7] or without the addition of talc.[8] A French process, the result of the investigations of Bonnaud and others,[9] is based upon the fact that boiling castor oil is an excellent solvent for the softer grades of copal, and that such a mixture is readily miscible with the usual cellulose nitrate solvents, thus allowing of mixtures of the oil and pyroxylin in a variety of combinations to be made. Bonnaud obtained

1. E.P. 1897, 1890; 3892, 1891.
2. W. P. Thompson, E.P. 11182, 1896; S. Bennett, E.P. 12693, 1896.
3. E.P. 10105, 1896.
4. Bussy, Phillipe, and Bussy, E.P. 27534, 1897.
5. E.P. 633, 1897.
6. E.P. 16332, 1900. Cf. G. Gawlich, E.P. 16199, 1909; abst. J.S.C.I., 1909, **28**, 420.
7. E.P. 536, 1901. See I. Kitsee, U.S.P. 651364, 1900.
8. E.P. 17883, 1899.
9. E.P. 8063, 1901. Resins of the copal class are suitable for stiff dressings, while metallic oleates, palmitates and stearates are more appropriate for supple dressings.

best results by dissolving 1 lb. each of nitrocellulose and camphor in 1 gal. methylated spirit, and adding to it 15% of a mixture of 6 parts copal in 180 parts of the oil. It has been used mainly for the impregnation of paper in the manufacture of confectionery and similar boxes, and the waterproofing of card- and straw-board. Separators for use in secondary and galvanic batteries [1] are made of nitrated cardboard, and after neutralization coated with a silicate paint, or gelatine after-hardened with formaldehyde.[2] A combined waterproofing and preserving composition may, according to the process of Bittner and Villedieu,[3] be prepared by combining any desirable composition with certain aromatic nitro compounds, preferably mononitronaphthalin and dinitrotoluene. Reichelt[4] impregnates belting or rope with "Kautschutkin"[5] in combination with pyroxylin and pigments by means of heavy pressure, and after thorough permeation, drying the waterproofed compound by gentle heat. The waterproofing process of H. Müller[6] consists in partially mercerizing an unstretched knitted or woven fabric rendered pliable by treatment with softening agents, and then uniting with their "wrong" or obverse sides together, by means of a pyroxylin solution, which gives to the product somewhat the appearance and feel of leather. Raincoats prepared according to the Blum method[7] comprise light sateens dipped into an amyl acetate solution of pyroxylin, the cloth centrifuged to remove solvent, and the pattern then printed on the cloth while in the moist state.

The heat-resisting packing of Oliver, used extensively in steam fitting, was a woven asbestos fabric, impregnated with a heavy pyroxylin solution, and then compressed hydraulically.[8] The "Marsden Goods"[9] consisted of a nitrocellulose solution containing raw corn oil and lanolin, deposited on heavy drill and duck cotton cloth, and afterwards calendered or otherwise rolled to increase resistance to moisture. Sattenole and Satino Morocco are trade names applied to artificial leathers used

1. E.P. 8280, 1901. For the L. Lilienfeld pyroxylin water-proofing process, see Jour. Soc. Dyers and Col., 1908, **24**, 86; E.P. 592, 1907. To produce that particular finish on textiles known as "silk finish," 100 parts of nitrocellulose is dissolved with 50–150 parts normal ethyl phthalate, in a suitable solvent mixture and applied to cloth in the usual manner. E. Kempshall (U.S.P. 964524, 1910) forms a composite sheet or fabric, by embedding a sheet of woven cloth by heat and pressure between sheets of celluloid, while the latter is in a solid but only partially cured condition.

2. E.P. 18599, 1903.

3. E.P. 7975, 1897; 16632, 1903.

4. E.P. 14122, 1902. See Société Weilue et Cie., E.P. 26469, 1908.

5. A preparation obtained by the treatment of resin oil with sulphuric acid, the substance obtained after purification and precipitation being mixed with colza oil and graphite.

6. E.P. 26593, 1908.

7. F.P. 392870, 1907.

8. E.P. 10104, 1896.

9. E.P. 17602, 1897.

for waterproofing purposes, being thin sateen or similar other cotton cloth, upon which has been deposited a pyroxylin solution high in castor oil, and usually containing powdered aluminum or other metallic bronze. The compounds of Bonnaud [1] were practically heavy pyroxylin-resin lacquers, the resin being usually copal. The mixture was applied hot in order to insure thorough permeation of the fibers of the cloth. Ramie, jute and other vegetable fibers were used to produce the heavy and cheaper grades of cloth. The electric wire insulating compound of Castle [2] is a cellulose of low nitration dissolved in acetone, and thickened with locust bean flour. To prepare gloves or other articles of dress for protecting the wearer against injury from X-rays, Saunders and Craske [3] first soak the fabric in a solution of lead nitrate, or use a saturated solution of lead acetate in ethyl alcohol as a component of the cellulose nitrate mixture, which is then applied to the cloth in the usual manner. Similarly prepared fabrics have been used as a protection against the emanations of radium. Where waterproof materials are not soft enough, even with the addition of the maximum amount of castor oil, 40% or 50% of the methyl or ethyl ester of sebacic acid may be added to the nitrocellulose solution.[4] But the present market price of methyl or ethyl sebacate, unless in a very impure form, would appear to preclude its use to any extended degree for this purpose. The waterproofing solutions in general are applied in a manner similar to the described processes for the manufacture of pyroxylin-containing leather. In the preparation of dress shields intended for insertion in the armpits to retard outward appearance of perspiration, a thin, finely woven muslin is usually taken for the background, and to give extreme flexibility, an equal weight of castor oil is added to the cellulose nitrate before application. After coating, the goods are usually passed through a calender with friction rolls to give the coated fabric a smooth appearance and high gloss.

Stevens [5] has drawn attention to the fact that those waterproofing compositions containing castor and non-drying oils—and they form the major portion of the preparations now in use—have a tendency to turn rancid upon standing, and this rancidity imparts to the fabric an objectionable odor and in time affects its strength. He has sought to improve such fabrics by the introduction of new elements into their combinations, whereby tendency to turn rancid is diminished. Carbolates and sulphocarbolates as alkali salts,[6] zinc chloride, bromide, iodode, and chlorate, mercuric chloride,[7] and sodium

1. U.S.P. 697790, 1902; E. P. 8063, 1901.
2. E.P. 2167, 1904.
3. E.P. 27357, 1904.
4. G. Z. Suppl., 1907 (July 19), 91.
5. U.S.P. 612066, 615319, 621382, 622727.
6. U.S.P. 612553, 1898.
7. U.S.P. 612066, 1898.

benzoate and salicylate, β-naphthol [1] and naphthalin [2] are among those chemicals stated to produce satisfactory results. The method of use is to dissolve the deodorizer or antiseptic in amyl acetate or alcohol and combine with the formula in the usual manner. Stevens submits as a satisfactory formula, pyroxylin 100, castor oil 150, camphor 150, zinc chloride 3, and wood spirit sufficient to thin the mixture so it will spread. Sulphocarbolate of soda is stated to be especially beneficial in this respect, used in quantities of 4% of the weight of the pyroxylin employed. Where transparency is of no importance,[3] potassium, sodium or lithium salicylates are advised, and zinc benzoate, salicylate or sodium β-naphtholate where color is of no moment. The method of A. Kennedy [4] consists in entwining or interlacing regular or ordinary threads along with extra strands or fibers of nitrocellulose (Fig. 119), thus forming a textured article, which when subjected to the action of a solvent of the nitrocellulose, causes the dissolved pyroxylin to impregnate the regular fibers, thus producing the waterproof effect.

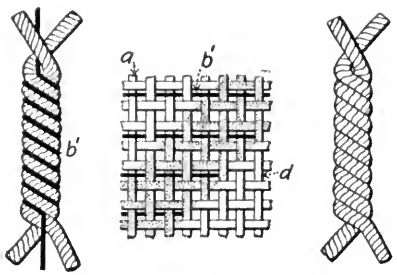

FIG. 119.—Waterproof Cloth According to A. Kennedy.

Enameled Paper. Wall Coverings. In order to produce in wall papers the appearance of silk, satin or horsehair fabrics, ordinary heavy paper is coated with a nitrocellulose solution in a manner similar to the coating of cloth for artificial leather, a small amount of castor or raw linseed oil being added.[5] When dry the coated paper is passed through an embossing machine the rollers of which run at equal or unequal speeds according to the effect required. It may also, before being embossed, be passed through a friction or glazing calender. If the embossing press is engraved with very fine flutes, a silky gloss or effect is made possible on the covered surface.[6]

"Fab-Ri-Ko-Na" is the trademark name for a line of woven wall coverings, which includes dyed and undyed burlaps, canvas, crash and other cotton goods. The dyed burlaps are in plain, solid colors, or printed in various designs. The undyed burlaps are given special fillings and surface treatment, and are intended to receive oil or distemper paint after they are hung. Some of the cotton fabrics are for

1. U.S.P. 622727, 1899.
2. U.S.P. 615319, 1898.
3. U.S.P. 621382, 1899.
4. U.S.P. 590842, 1895.
5. W. V. Wilson, E.P. 6051, 1884; 491, 4668, 1885.
6. W. L. Wise, E.P. 18374, 1900.

painting on, where others are for lining walls where a lining is needed as a foundation for other wall coverings. All the goods are given a backing which is made to receive ordinary flour paste, and they are hung similar to wall paper. Containing no pyroxylin, these products are, therefore uninflammable, and have both the face and back impregnated with a non-poisonous, odorless, antiseptic substance. "Cott-A-Lap" and "Tex-Ta-Dor-No" are similar.

Aluminum, gilt and the various colored bronzes are especially applicable as materials for the coating of paper, principally due to the fact that a thin layer can be applied to the paper and still have the finished preparation entirely opaque. If the paper backing has the requisite strength, the finished material may be embossed in raised work by means of a plate embosser and artificial heat. Usually but one coating is given the paper, the bronze being incorporated in the coating composition before spreading. It is a peculiar fact that aluminum in combination with cellulose nitrate—the latter being in solution—is very prone to gelatinize upon standing, so that paper cloth intended to be coated with aluminum must have the composition applied soon after made, or the material solidifies, after which no combination of solvents will render the material sufficiently soluble to admit of again spreading with uniformity.[1] Another method resorted to less frequently is to cover the paper with a transparent pyroxylin coating, after which aluminum or other metallic powder is sifted on the wet surface and before the latter has had time to harden. After passing under rolls to imbed the metal in the coating composition, the paper passes over steam-heated drums until dry, when the superfluous powder is removed mechanically. Snow and other brilliant effects are produced by substituting for, or using with the colored bronzes, powdered mica, quartz, garnet, and ground crown and prism glass, the scintillation of the latter making more conspicuous the metal and bronze portion.[2] [3]

Enameled paper in which the waterproofing portion is pyroxylin or celluloid has been in active demand for many years as coverings for confectionery boxes and similar uses, and the paper is impregnated or enameled with the cellulose nitrate usually in one of the three following ways:

1. H. Heil and E. van den Kerkhoff (D.R.P. 217852, 1908) claim that these difficulties can be obviated by using cellulose nitrate soluble in alcohol, and dissolved in absolute alcohol or alcohol of high concentration.

2. For descriptions of machinery and processes for pyroxylin coating of paper see S. F. Pichler, E.P. 9261, 1894; F. E. Ullstein, E.P. 5657, 1885; E. Bush, E.P. 9624, 1895; 22674, 1898.

3. For description of other methods of coating paper see T. Fritsch, E.P. 6590, 1906; Vellumoid Paper Company, U.S.P. 740006, 1903; E.P. 19541, 1903; abst. J.S.C.I., 1903, **22**, 1145.

Where celluloid is used in the solid form, it is preferably first ground in water to the desired fineness for the particular paper to be made, but not dissolved. The wet celluloid and moist paper pulp are then thoroughly mixed until either component is indistinguishable to the naked eye. After the combined pulp-celluloid paper has been formed into rolls in the usual manner, and has passed through the last of the heated rollers used for the removal of the water, the paper may either be passed through a calender roll heated to 145–160° with great pressure in order to soften the celluloid and amalgamate it with the paper substance, or the paper may be put through a vapor bath of alcohol spray, the object of the latter process being to sufficiently dissolve the superficial celluloid to produce the waterproofing and enameled effect. In order to economize on alcohol solvent used, the two steps may be combined, and heated rollers used at first, this being followed by the alcoholic vapor or spray to integrate what material has not been affected by the heated calender rollers. By this method[1] the paper is waterproofed and enameled as well. The proportion of celluloid to paper will depend upon the uses to which the finished paper is to be put.

In the method of J. Edson[2] sheets of paper and celluloid are rolled together between compression devices, being subjected to a spray of solvent just before they are pressed together. In order to produce enameled paper or fabrics of two or more colors, M. Bogert[3] first submerges the paper or fabric in a pyroxylin solution of convenient concentration as regards the nitrocellulose, and after the paper or fabric has been subjected to slight pressure to remove the majority of solvent, small pieces of celluloid in stars or other shapes are placed over the soft surface, the latter being then subjected to heavy roll or press pressure in order to imbed the colored pieces in the yielding celluloid substance. After the solvent has entirely evaporated the goods are passed through friction rolls to increase the polished appearance. Care must be exercised that the solvent be nearly all removed before the colored designs are attached or the color in the latter may sufficiently dissolve out to impart a blurred appearance due to the indistinctness of the partially dissolved patterns. Such materials are admirably adapted to be used in the manufacture of pencil cases, card cases, jewelry, watch and toilet cases, book and album covers, and similar uses.

In the P. Reid and J. Eastwood method of topical printing[4] the distinctive novelty of the invention consists in the employment of a

1. Process of W. Carpenter, U.S.P. 251410, 1881; 253840, 1882.
2. U.S.P. 290553, 1883. 3. U.S.P. 270538, 1883. 4. U.S.P. 256597, 1882.

pyroxylin solution for the purpose of "setting" or "fixing" the design, the impression being delivered by means of pressure or by bringing a surface having a "color" applied to it in direct contact with another surface upon which the impression is intended to be made. Previous to this invention it had been necessary to apply heat or other treatment after the printing operation, in order to fix or set the color upon the surface which had received the impression. The employment of a pyroxylin solution as the binding material to secure the mechanical attachment of pigments to surfaces upon which impressions have been made enabled any subsequent treatment to be dispensed with after the mixture had been applied to the surface by printing. The pattern was placed on an enameled or waterproofed paper or textile by a method quite similar to direct printing, except the ink was replaced by a colored pyroxylin solution.[1] Rollers, types, blocks or other agents are suitable for delivering the impression, the pyroxylin composition, in general, consisting of pigments or dyestuffs ground or dissolved in a slowly evaporating cellulose nitrate composition, e.g., one high in fusel oil and amyl acetate. The veneer cloth[2] and enamel cloth[3] of J. Stevens and W. Wood is based on the same principle as above.

Printing on Fabrics with Pyroxylin. The Lilienfeld method of producing impressions fast to water[4] is to combine pyroxylin with organic esters of high boiling-point—ethyl phthalate being specified—and apply this to the cloth in any suitable manner. Instead of evaporating the solvent from the cloth after passing under the coating knives the coated fabric is passed between two rollers, one or both of them being engraved with lines. These rolls are heated nearly to the boiling temperature of the solvent used, so that after having passed through the rollers the fabric will assume a stiff form before the embossing disappears. The major portion of the solvent is vaporized at the moment of contact with the engraved rolls and the surface of the cloth assumes the form corresponding to that of the surface of the roller, thus producing a sheen and shimmer to the finished fabric, especially when viewed at an obtuse angle to the source of light.

Imitation Textiles. In order to imitate damask for tablecloths, napkins and fine linen, according to the process of E. Heusch,[5] the textile material is covered with a nitrocellulose solution containing a small amount of castor oil to impart the desired flexibility, after which the coated cloth is embossed by engraved rollers in such a manner as to produce the appearance of damask on the surface. Artificial brocade may be prepared by the method of F. P. Werner[6] by moisten-

1. See J. E. Brandenberger, F.P. 405430, 1908; E.P. 24811, 1908.
2. U.S.P. 297098, 1884. 3. U.S.P. 329093, 1885. 4. E.P. 592, 1907.
5. E.P. 22391, 1899. 6. E.P. 22262, 1891; see R. Kron, E.P. 13112, 1902

ing a woven fabric with gelatin and pyroxylin both dissolved in glacial acetic acid. It is then coated with a paste containing pigment and cellulose nitrate in solution, together with Venice turpentine, the whole being painted on with a brush. When dry, the final coat is applied by brushing over the surface an amyl acetate lacquer containing a small amount of boiled linseed oil. Subsequently the fabric is covered with leaf metal, either real or imitation, followed by an alcoholic shellac solution to aid in the adhesion. This surface can be embroidered, painted or printed on for producing upholstery and other coverings.

A process for the formation of artificial velvet devised by F. Kuhlmann [1] has recently been placed on a manufacturing scale in England, and consists of applying wool dust or cotton dust to a paper or cloth surface by means of a pyroxylin cement, or to a cotton or linen fabric to imitate woolen. The wool or cotton may be dyed before or after application. Similarly, imitation of Brussels and other carpets has been attempted by adding cotton and woolen dust or flock to a backing of burlap or other heavy material, the adhesive being a composition similar to that used in artificial pyroxylin leather. The woolen or cotton is sifted on the surface freshly covered with pyroxylin, then passed between rollers to imbed the material in the adhesive composition, when after drying the coated cloth passes through heavy brushes which raise the "nap" of the carpet. A silky appearance may be given to closely woven shirting or other cheap fabric of cotton or linen according to the claims of Thompson,[2] by means of metallic powder in an extremely divided condition applied warm with "zapon lacquer." The success of the product depends upon applying but a minute portion of the metal—just sufficient to give to the goods that silvery appearance similar to mercerized cotton. In metallizing yarns or hosiery made of textile fibers,[3] a mobile solution of cellulose nitrate in ether-alcohol has been advocated. The metallic powder is suspended in the liquid, and the yarn dipped in the solution. After thorough drying the process is completed by an immersion in a pyroxylin solution to which no metal has been added. Watered effects are possible by slightly dampening the fabric by means of a spray of a 4–5 oz. cellulose nitrate solution in a readily volatilizable solvent as methyl alcohol or acetone, and then passing between heated rollers, one or both of them being engraved with lines. The solvent being vaporized at the moment of contact with the heated rollers, the surface of the

1. E.P. 320, 1855.
2. E.P. 13485, 1904; for process of obtaining iridescent textiles see Joly, F.P. 350041, 1904.
3. A. Forster, E.P. 24289, 1903.

cloth will permanently assume the form of the roller. The insolubility of the sprayed lacquer in water produces effects not altered by exposure of the fabric to dampness. For moreens, in which the rib of the cloth runs in the direction of the warp,[1] the lines on the roller are cut circumferentially; whereas for moirettes and poplins, in which the rib runs weft-wise, the lines are engraved parallel to the axis. For watered designs, the lines, instead of being continuous, contain the design engraved in relief on the roller, and the face of the design is then engraved with lines at such a distance from each other as harmonizes best with the rib of the fabric.

According to F. P. Werner [2] a substitute for or imitation of brocade, free from the liability of the metal to chip or rub off, may be produced as follows: The fabric is stretched smooth on a frame, moistened with gelatin, and dried. The surface is then brushed over with "leather collodion," and again coated after drying with "French mixtion" or gold ground in oil, which is sprinkled over the surface very lightly. Any suitable pattern may then be stamped on the surface. M. Ratignier and H. Pervilhac [3] make artificial lace fabric by discharging collodion upon a roller, the face of which is engraved with grooves of lace pattern, the surplus material being removed, and that retained in the grooves hardened by chemical treatment or evaporation before removal from the roller.

According to J. and B. Galay [4] paper, glass, or other materials may be coated with a mixture of collodion and powdered metal by applying the fluid mixture to the surface of the material in a closed chamber or discharging it from a closed vessel through a slot. The coated material is then passed through a trough, in which a stream of water flows in an opposite direction to the travel of the coated material. The water absorbs the solvent of the collodion and fixes the film, the the solvent being recovered by distillation. The thickness of the film may be varied at will, either by rolling it under water whilst the collodion is still plastic, or else by conducting the material from the coating vessel to the water trough at a suitable angle of inclination, so that the excess of the coating mixture flows back to the vessel.

Artificial Leather Cements. To unite sheets of coated cloth in the formation of larger pieces, to mend leather and cloth belts not subjected to high tension, and to repair pyroxylin-containing articles, various adhesives have been suggested. The most successful have

1. J. and S. H. Sharp, E.P. 21590, 22056, 1906; 7382, 7749, 1907.
2. E.P. 22262, 1891; in the haircloth fabric of G. Goldman (U.S.P. 840841, 1907) zinc resinate is the adhesive.
3. U.S.P. 934214, 1909.
4. E.P. 19772, 1909.

consisted of a pyroxylin solution (12–16 oz.) containing 3–4 oz. camphor, and low in solvent power. The latter property is necessary in order that the cement will not deeply penetrate the coated material, and render it soft and slow in drying. In order that this class of adhesives shall act quickly, the solvents are all low boiling (acetone and wood alcohol), and as little as possible of the pyroxylin solution is used, heavy pressure after application being beneficial. The preparations of S. Barnwell and A. Rollason,[1] T. F. Gillot,[2] and J. H. Drinkwater[3] have consisted of "xylonite varnish"—combinations of pyroxylin with india-rubber, resins or linseed oil, and shellac partially saponified with borax. A preparation of a 6 oz. pyroxylin in amyl acetate 55, fusel oil 12, acetone 10, and benzine 23, mixed with 5 oz. india-rubber in 7 oz. carbon bisulphide is said to be very adhesive, and has been used to attach tires with satisfactory results. Carlton Ellis[4] has produced a preparation fairly representative of this class of adhesives, consisting of 10 lb. nitrocellulose dissolved in 8 gal. acetone, 1 gal. amyl acetate, and ¼ gal. creosote, to which 4 lb. camphor is added. The creosote may be intended as a deodorizer, an unusual constituent in a cement of this character. The two pieces of textile or other material which it is desired to join are laid together, a small amount of cement brushed on, pressure applied and continued if possible until the solvents have nearly evaporated, when the pressure is removed and the cemented surfaces allowed to harden in the air. Where the pressed pieces are joined before embossing, the pressing of the pattern renders the cemented edges practically invisible.

A preparation known as "Universal Belt Cement," and to be obtained on the market, is a thick, heavy-flowing liquid, colorless, consisting of pyroxylin 12%, camphor 5%, amyl acetate 40–45%, refined fusel oil 5%, acetone and wood alcohol 40%, and is said to give excellent satisfaction. The ends of the belt to be joined are shaved smooth, the cement applied, and the edges pressed or hammered together and fastened until the cement has become dry.

1. E.P. 2249, 1860.
2. E.P. 1746, 1866.
3. E.P. 2625, 1872.
4. U.S.P. 778232, 1904.

CHAPTER XII

PYROXYLIN-COATED ENAMEL AND PATENT LEATHERS

At the risk of incurring adverse criticism, it is the author's conviction based upon experience, that the coating of leather with the cellulose nitrates, as at present carried on in the United States at least, has not placed itself on anything like a satisfactory scientific basis. And this is primarily due to the fact that the entire tanning industry seems to be permeated with (to say the least) a degree of reticence, coupled with apparently irrational and scientifically inexplicable individual methods and rule-of-thumb processes, which at the present time make attempts to reduce the pyroxylin coating of leather to an exact and logical basis very difficult, if not wellnigh impossible. The cellulose nitrates are applied to the tanned skins and leather only in the condition in which the latter are presented; on *a priori* grounds, therefore, it is evident that if the preliminary steps of tanning and finishing are not reduced to a somewhat generally accepted uniform system of procedure for the various classes and conditions of skins, definite and concordant results in subsequent pyroxylin coating are impossible. An immense amount of intelligent experimentation and a high degree of theoretical and manipulative skill have been brought to bear on the choice of solvents and selection of nitrocotton; it is possible to produce a pyroxylin solution where the solubility, viscosity, total solids and speed of evaporation are under entire control and can be duplicated indefinitely; therefore the frequent lack of uniformity of results obtained in leather coating must be mainly attributable to the varying nature of the skin and its treatment in the processes of leather formation.

The coating of leather with pyroxylin is comparatively recent.[1] In the United States census returns for 1900 no mention is made of the application of nitrocotton to leather. It is within the past ten

1. An idea may be gained of the (practically) entire absence of information on this subject from the fact that the following works contain no mention of the application of pyroxylin to leather: Proctor, "Leather Manufacture," 1903; Trotman, "Leather Trades Chemistry," 1908; Watt, Leather Manufacture," 1906; Flemming, "Practical Tanning," 1909; Bennet, "Manufacture of Leather," 1910.

years that this art has passed out of the experimental stage, while to-day it is firmly established as a distinct industry. The advent of the "hide splitting" machine, whereby a skin is cut into two or three sections, each of the size and shape of the original, has done much to give impetus to leather coating, because it has made available a large number of hides of inferior quality which it was found could be greatly improved in appearance and lasting qualities by treatment with nitrocellulose solutions. The three centers of industry in the United States at present may be stated as Newark, N. J.; Bristol, Pa., and the vicinity of Philadelphia, and Boston, Mass. At Newark the majority of hides treated are the so-called "splits" and chrome tan leather.

The object of tanning hides, kips and skins [1] is to render the animal skin imputrescible and pliable, and to indefinitely preserve it. At the present day, as leather is rarely used with the hair on, preliminary processes are first needed to remove the hair and to prepare the skin for the subsequent tanning processes. The skin is usually first washed to remove dirt, blood and salt, the removal of the latter restoring the skin in a great measure to its original soft and permeable condition. The hair is loosened by softening and partial solution of the epidermal structure in which it is rooted. This is accomplished usually by soaking for some days in a milk-of-lime solution whose action may or may not be facilitated by the addition of alkaline hydroxides or sulphides. When the latter are used exclusively and in concentrated condition, the hair as well as the epidermis is softened, or if the solvent action be continued, is entirely dissolved and destroyed. In addition to loosening the hair, it is claimed the lime swells and bursts the fiber bundles of which the hide tissue is composed, making the latter in a more receptive state to receive the tannin. The lime also saponifies any fat present, which is afterwards removed as the calcium salts of the fatty acids.[2]

1. Animal skins are divided into (1) hides, or the skins of the larger and full-grown animals as ox, cow, bull, buffalo, horse; (2) kips, or the skins of the smaller animals of the bovine class; (3) skins, of the smaller animals, as calf, goat, deer, sheep, fox. Kip is a name also applied to a tanned split skin of a weight between that of a calf and a light hide. The quality of hides and skins is greatly influenced by the conditions under which the animal has grown, the nature of its food, the variety of breed, climate and state of its constitution, its age and the time of year when it is slaughtered. The hides of the larger oxen form, when tanned, a stouter and heavier leather than those of cows, especially if the latter are from old animals or from those which have calved several times. The hides of bulls are of coarser grain and thinner in the back or butt, than those of oxen or heifers or young cows, although they are stouter in the neck and certain parts of the belly.

2. For some purposes a distinct putrefactive process is substituted for the liming, the skins being hung in a moist, warm chamber until the soft mucous layer forming the corium or inner epidermis partially disintegrates by simple putrefaction, sufficiently so that the hair may be scraped off. In this case the hide fiber is not

The hair, after loosening, is scraped off with a curved handle blunt knife on a partially rounded sloping board called a " beam," the operation being termed " depilating " or " unhairing." [1]

This is usually followed by " fleshing," which is a similar treatment of the other side of the skin on the same beam, and with a similarly shaped knife, which however, is two-edged and sharp. All of the true flesh, fat and loose tissue, is carefully removed by scraping and cutting, fleshing machines being largely used for this purpose. For sole leather the skin, after thorough washing in soft water to eliminate all traces of lime, is then ready for the tanning process proper. For the softer and finer grades of leathers a more thorough treatment is given for removal of the lime, and so increase the pliability of the skin by solution and removal of a portion of the intercellular tissue.

This fermentative and putrefactive process, the most common form of which is known as " bating," consists in steeping the hide for a number of days in a fermenting infusion of pigeon- or hen-dung. While the theory of its action is not understood it has been ascribed to the unorganized enzymes elaborated by the bacteria present. The effect is the removal of the lime by the weak organic acids formed, the partial disintegration of the cuticular fiber, and the skin—which upon treatment with lime has become plump and swollen—rapidly becomes relaxed and flabby.

In the lightest weight leathers, such as kid and lambskins for gloves, and goat and sheep for moroccos and cordovans, dog-dung is substituted for that of fowls, when the process becomes known as " puering." If the lime has not been entirely eliminated, a subsequent treatment called "drenching " is resorted to. This comprises either soaking the skins in a fermenting bran infusion in which the small quantities of acetic and lactic acids formed exert a solvent on the lime, or more recently of treating the skins directly with lactic acid, alone or in conjunction with acetic acid. The next step is the tanning process proper, which consists in soaking the pelts in a series of tannin extracts or infusions, commencing with a weak solution and increasing the strength of tannin, until examination of the skin shows that the penetration has been complete and the cuticle and corium converted into an insoluble compound of albumen or gelatin with tannin, from which neither component can be regenerated. With heavy pelts the final process is often to dust the moist hide with a powdered tannin-

swollen and the swelling has to be induced by a distinct process. This method, if carried too far, results in the complete disintegration of the skin and the formation of a leather very low in tensile strength.

1. The above facts were taken from " Leather Manufacture," H. R. Proctor, 1903.

containing compound, to obtain the maximum of penetration. In the case of sole leather this process, carefully conducted, may require as long as twelve months for successful completion, in order that the hide may be evenly and thoroughly permeated without wrinkling. The leather is then washed free of uncombined tannin, dried and compressed, when it is ready for use.

Dressing leathers, due to their decreased thickness, are tanned in much less time than sole leather, the subsequent filling with fats and oils, which together with the mechanical manipulation constitute "currying." A final film of grease distributed over the surface of these leathers increases the pliability and makes them nearly waterproof. Morocco and other lighter fancy leathers are dyed and submitted to many complex processes before they are offered to the trade, which enhance their value, improve the appearance and increase their durability. Many skins such as calf, glove and glacé kid, are "tawed" instead of tanned, by treatment with a solution of alum and salt, often supplemented by mixtures of flour and albumen to fill and soften the leather.

"Wash leather" or so-called chamois, and leather used for buffing, are produced by fulling the skin with fish, degras, or whale oil, which converts the skin into leather by subsequent oxidation and at the same time oxidizes the skin to a readily pliable condition.

Past Processes for the Ornamentation of Leather. In 1882[1] J. Epstein published his process for producing the appearance of oxidized copper or bronze on leather, usually called "patina." The leather, previous dyed, embossed and grained, is coated with a lacquer containing nitrocotton and a resin, in which the dyestuffs are in solution. To produce a blending of the colors, a portion of the varnish is removed when only partially dry, by rubbing with oil of turpentine. O. Lindner[2] has endeavored to imitate the markings on crocodile skin on leather, by covering the surface with a moderately concentrated solution of glue in acetic acid together with an oil paint, and then drying this coating in a sufficiently rapid manner to cause it to shrink and become cracked, as in the natural skin. A final coat of pyroxylin is applied to form a transparent and tough protective coating. A liquid compound to facilitate the marking of patterns on leather through a perforated stencil for embroidery, may be made[3] by means of a thin pyroxylin lacquer containing a pigment or bronze, oil of bergamot, patchouly or safrol being added to impart an agreeable odor. To place a design, picture, crest or monogram on leather,[4] the design is

1. E.P. 6152, 1882.
2. E.P. 3645, 1886.
3. According to L. Whitefield, E.P. 2123, 1887.
4. T. Stevens, E.P. 4833, 1887.

first woven or otherwise constructed and affixed to the leather by means of a thin pyroxylin cement aided by pressure. After drying, a thin celluloid film is placed over the entire design, the leather having been first moistened with amyl acetate. Pressure is again applied, whereby the superposed celluloid layer is rendered invisible, and the design firmly fixed to the leather. The polished surfaces prepared by P. Meissner [1] by coating leather with celluloid sheets and submitting them to great pressure at a temperature just high enough to soften the celluloid, were highly polished, but they readily separated from the leather on frequent bending. An ingenious machine has been devised for continuously applying gold or silver leaf in strips or bands to leather,[2] consisting essentially in an endless roll over which the leaf passes, where it meets the leather just previously moistened by a thin lacquer. Immediately after the union of the leaf and leather a steam heated pressure roll is encountered, which imbeds the leaf in the leather and at the same time vaporizes the lacquer solvent. The waste paper from the back of the leaf is carried away by means of drawing rollers. To give leather articles the appearance of enameling,[3] they are partly or wholly covered with so-called "silver paper," either plain or embossed with a design. The paper is affixed by pyroxylin and covered with a celluloid sheet. In another method [4] the dressed and pumiced leather is coated with a mixture of 12 oz. pyroxylin dissolved in a gallon of amyl acetate, containing dyestuff or pigment, to which is added 10 oz. lanolin or wool-fat. The finishing coat consists of the above mixture with the lanolin omitted. No wool-fat, to the author's knowledge, is used in leather-coating compositions at the present time.

Earlier Methods of Coating Skins with Pyroxylin. As far back as 1864, A. Rollason, as the result of experiments on varnishing leather, obtained a patent [5] for a "collodion composition" to be applied to leather to give it a glazed or varnished appearance.[6] After the failure of Parkesine, Parkes turned his attention to other possible sources of collodion application, and devoted considerable time to the coating of leather and furs. In his patent of 1881 [7] there is described a process whereby the leather is first treated with a solution of cellulose

1. E.P. 12870, 1896.
2. L. Bracher, W. Collyer and J. Cassells, E.P. 25369, 1896.
3. J. Herz, E.P. 758, 1897; E. Deiss, E.P. 5837, 1903.
4. Marsden Co., E.P. 17602, 1897; U.S.P. 587097, 1897.
5. E.P. 2143, 1864.
6. He combined collodion with flexible gums as elemi and animi, brushing the mixture on polished glass or metallic surfaces, and then applying the dried film to the leather with friction.
7. E.P. 983; U.S.P. 265337, 1882 (A. Parkes only U.S. Patent).

in zinc chloride or iodide, after which a nitrocotton mixture is applied. It was found, however, that the leather coated by Parkes' method rapidly became brittle and lost its tensile strength, so that the process never developed into commercial importance. In connection with Daniel Spill's American zylonite patents, J. Edson in 1883 [1] described that which may be regarded as the first workable method published for the combination of pyroxylin with leather, in which a definite process of attachment of a nitrocotton film is given. Edson first prepared a film of the cellulose nitrate with or without camphor, by allowing a fluid solution to dry on a glass plate protected from dust. The leather was moistened with a pyroxylin solvent, and that side of the film not adhering to the glass attached to the leather, great pressure being exerted. In this manner the leather was covered with a highly polished, water-repellent coat of great beauty and durability. Investigators immediately elaborated on these general principles as laid down by Edson, as to thickness of film and degree and length of time of pressure, pigments, dyestuffs and oils being added to the leather before the film was applied. It was found, however, that the film was inclined to separate from the leather in bending, and this defect could not be satisfactorily overcome. When the pliability of the leather was increased by oiling, the defect became more noticeable. W. Field [2] endeavored to overcome this difficulty by incorporating the oil directly into the film, and this led him to use boiled linseed oil as one ingredient, probably the first attempt to make patent leather with pyroxylin. Although blown corn oil, peanut, castor and rape oils were tried, all appeared to be unsuccessful, the union of film to leather being insufficiently tenacious to meet the trade demands. In order to diminish the antipathy of the oil to pyroxylin, linseed and castor oil were first nitrated,[3] the pyroxylin and nitrated oil being dissolved together in acetone, evaporated to dryness and attached to the leather. In order to induce a more intimate union of pyroxylin and leather the mixture was applied in the semisolid or heavy fluid state, after which a film was attached or a liquid lacquer brushed over the surface as a finishing coat. A. Cohn [4] in 1901, and E. Jetter [5] two years later, made substantial improvements, the first by superposing on the leather a series of coats of varying fluidity and oil content, and the latter by increasing the penetrative power of the lacquer by the partial use of glacial acetic acid. From 1903 until the present

1. U.S.P. 289241, 289338, 1883; E.P. 5554, 1883.
2. E.P. 3469, 1893.
3. W. Reid and E. Earle, E.P. 26677, 1897; see Velvril.
4. E.P. 16429, 1901.
5. E.P. 4902, 1903.

time improvement has been mainly along the lines of selection of suitable oils to combine with the nitrocotton solution, the adjustment of the composition of the individual coatings, and the nitration of cotton to produce clear and highly flexible films. It was early demonstrated that the nature of the skin and the tanning processes, as governing the porosity of the finished leather, were of great importance in the application of successful coating mixtures, for unless the pyroxylin was enabled to obtain a firm and satisfactory anchorage in the leather substance, application of subsequent coats only tended to pull the first coat away from the leather, and hence weaken the pyroxylin structure as a whole. The importance of the porosity of the leather fiber as a suitable medium for the attachment of pyroxylin cannot be overestimated, and at the present day is one of the most important—if not the unsolved—problem in the successful pyroxylin coating of leather for patent and enamel effects.

The Process of Field. The first departure from attempts to attach films to leather which met with any considerable commercial success was the process of W. D. Field,[1] in which a fluid pyroxylin preparation was placed directly on the leather, and which contained a vegetable oil as an essential component. Previous to this the many unsuccessful attempts which had been made in this direction had been due to the impregnation of the leather substance with pyroxylin solutions, with the result that a stiff, horny and non-flexible skin was produced. Applying the experience gained in the coating of cloth with nitrocotton,[2] Field succeeded in obtaining quite satisfactory results with the following process—so far as toughness and pliability are concerned. Corn or cottonseed oil—preferably the latter—is first boiled or "blown" with a siccative, as antimony pentasulphide, until the proper consistency has been obtained. A solution of 15 lb. pyroxylin in 15 gal. amyl acetate is made, to this being added in small quantities at a time 50 to 60 lb. of the oil blown as above. If pigment is required, it is first ground in a small quantity of the oil before incorporation with the pyroxylin. The material is applied to the leather with a brush or "slicker," allowing each coat to dry by exposure to the sun or artificial heat not above 40°. The final or varnish coat, much thinner than the preceding, is applied by flowing over the surface, when the skin is left at the ordinary temperature until thoroughly dry. Although the finished product had a disagreeable odor, contained pigment instead of dyestuff which gave a slightly granular appearance to the finished coat, and was of a dark brown rather than a glossy, bloomy black color, Field was the first to produce, in all

1. U.S.P. 627493, 1899. 2. See Chapter XI.

probability, on a manufacturing scale, a flexible, non-penetrable pyroxylin coating on an absorbent, pliable material, which was surface-hardened by a thin, flexible varnish high in nitrocotton, and which proved a commercial success.

A. Kennedy's Method[1] modified Field's process in that the flexibility of the leather was increased by applying as the first coat a mixture of pyroxylin, lanolin and corn oil together with coloring matter, preferably in the following proportions: 12 oz. pyroxylin is dissolved in 1 gal. amyl acetate, to which is added 10 oz. lanolin and 3 oz. corn oil. The solution is applied to the leather in the usual way and after drying, a finishing coat of pyroxylin, 10 oz. to the gal., is flowed over to give a more resplendent surface. The fatal defect in this process was the tendency—on long storing—of the corn oil to exude ("spew" or "sweat out") on the surface, either as a greasy opaque bloom or as minute oily drops.

Enameling Composition of Byron Goldsmith.[2] In 1909 patent protection was granted for a method of enameling which may be said to embody the most modern patent and enamel leather principles. The linseed oil is first mixed with pyroxylin in solution, and the leather coated in such a manner with one or more layers that the coating last applied is a solution consisting of a solvent of the previous coating. Therefore in building up a plurality of coats the increment of each is "amalgamated" or becomes an integral portion of the last previous coat. A 6 oz. solution of pyroxylin in one gallon of amyl acetate is specified, to which, for the first coat, an equal volume of boiled linseed oil is added. The larger the proportion of linseed oil, the greater the gloss and the softer and more easily scratched the coat. The proportion of pyroxylin is increased from the first to the last coats, the exact number of which will depend upon the fluidity of the solution and the amount used in each separate enameling process.

The Adams & McKay Process.[3] This invention relates to the manufacture of that class of enamel and patent leathers where the enameling is applied to the grain side only, and without previous buffing, as distinguished from that class in which the enameling is applied to the flesh or grain side, which has been rendered more receptive and porous by buffing. The process, therefore, is particularly applicable to the manufacture of enamel and patent leathers from light skins as

1. U.S.P. 587097, 1897.
2. U.S.P. 909288, 1909.
3. W. Adams and H. C. McKay, U.S.P. 789249, 1905; the Patent Leather Company of America prefer to use a non-drying oil, as castor or arrack oil, for the inner coat in amounts not less than 30% oil to pyroxylin employed. (E.P. 16598, 1906; F.P. 368383, 1906.)

goat, on which it is often not desirable to apply enamel to the flesh side, nor advisable to buff the grain side.

The process is essentially comprised in two steps, i.e., the degreasing of the leather by means of solvents, followed by the drying oil-pyroxylin preparation. When the tanned skins have been finished to the point where they would otherwise be surface-finished in any of the known ways to make them merchantable, the natural and applied grease in the leather is completely extracted with solvent,[1] preferably naphtha. It is claimed that this degreasing step is essential to enable the pyroxylin varnish to penetrate the grain side below the surface and properly adhere to the inner fibers.[2] Another step in the process which may be profitably employed before the tanned skin is degreased, is a smoothing and compacting of the grain, either by repeated manual application with a slicker, or passing the hide under the glass roller of a glazing machine as though the tanned skin was to be made into glazed kid. The usual "seasoning" with albumen is applied just before glazing. The advantage of the glazing process is the formation of a very smooth and compact surface for the application of the pyroxylin-oil varnish.

In the carrying out of the second portion of the process—the application of the pyroxylin coating—the varnish should be sufficiently fluid to admit of being spread with a brush or sponge, and readily absorbed by the fibrous structure of the grain side without producing an enamel coating. The composition consists preferably of linseed oil boiled to the consistency of fresh mucilage, thinning one quart of this with an equal volume of amyl acetate, or sufficient to give it a density of 31° Bé., and then adding a pyroxylin solution consisting of 1 lb. nitrocotton in 2 gal. amyl acetate. The solvent portion of such a formula is unnecessarily expensive. To each 3 gal. of the above mixture, 1½ oz. nigrosine in 1 quart methyl alochol is added for the black color. It is claimed that the above composition is absorbed almost instantly by the skin so prepared, penetrating the interior grain surface and enveloping and adhering to the fibers composing the epidermal or grain side with great tenacity. The skins are then either dried in the sun or an oven at a low temperature, and coated with a varnish patented by McKay,[3] which is prepared as described above. It is evident in this process that if a coating of albumen is applied to the grain surface before the pyroxylin, the former will interfere with the penetration of the latter into the leather fiber, albumen not being dissolved by the

1. W. Adams, U.S.P. 685551, 685552, 1901.
2. Pyroxylin and oils being antagonistic.
3. H. C McKay, U.S.P. 704082, 1902.

pyroxylin solvents named, and hence it would appear that the use of albumen would decrease the adhesion of the nitrocotton, unless a mutual solvent for both pyroxylin and albumen—such as acetic acid—is used. The elimination from the skin, by degreasing, of the oil, which is a direct pyroxylin repellant, is the novel and meritorious invention in the process, and where the proportion of linseed oil is sufficiently large in the first coat to give the desired flexibility, and the solution is sufficiently thin to properly penetrate the fiber, a surface of great brilliancy and strength, it appears, should result.

B. Goldsmith [1] advocates the use of "sized" or "glazed" leather,[2] but increases the adhesion of the enamel coating to the leather by slightly abrading the gelatinous or albuminous surface of the sizing before the pyroxylin coats are applied. This, in practice, may be accomplished by powdered pumice-stone and buffers. The final or enamel coat consists of pyroxylin and a drying oil, preferably 6 oz. of the former to a gallon of solvent, into which has been incorporated 6–9 oz. of oil.[3]

De Montlord's Film Enamel. A novel process has recently been proposed [4] of making patent leather by using ethyl acetate as a solvent, the production of which solvent is made possible at a reasonable cost by the use of denatured ethyl alcohol. If De Montlord has succeeded in evolving a process of attaching leather and pyroxylin satisfactorily with ethyl acetate, he has succeeded in a field in which many have worked but all have failed. The ready volatility, hygroscopicity and proneness to acidity of this ester have been the drawbacks which previous investigators have encountered.

The invention consists of a process of making patent leather or artificial patent leather by dissolving nitrocellulose in a suitable solvent with addition of a vegetable oil, alcohol, glycerol, spirits of turpentine, and a pigment or dyestuff, coating either plate glass or aluminum plate, with a composition with from three to five coatings, as may be

1. U.S.P. 783828, 1905.

2. Such leather is made by the application of several coats of albumen or gelatin, in which condition it is known as "sized" leather, or, if after applying the size the surface is polished in a glazing machine, the leather is termed "glazed."

3. In order to save the expense of enameling those portions of the skin which are not used in the finished article and in order to make it possible to utilize the corresponding portions of the sized or glazed leather—that is to say, those portions which would ultimately disappear in scraps after the enameled leather has been cut into its ultimate shape—the sized or glazed leather may be cut into its finished or vamp shape, and then the enameling coat or coats applied in the manner described, to the cut-out pieces. This process is peculiarly useful, because whereas the scraps remaining from cutting up enameled leather into its vamp form have little utility, the scraps remaining from cutting up sized or glazed leather into such forms have considerable commercial value.

4. G. R. De Montlord, U.S.P. 928235, 1909.

required, according to the thickness of either the cotton cloth or the leather to be transformed into patent leather. Each separate coating so spread on the plate is dried by heat before applying the subsequent coating. When the coatings are dry, the leather is then cut in size to fit the plate or the glass on which it is applied, after being immersed in pure ethyl acetate; the leather is then spread on the already coated glass or plate, by means of heavy steel rolls, so that the solution in which the leather is immersed and the coats on the glass or plate adhere strongly together. The plate or glass is then dried with the leather on it, and after drying is carefully removed with the coating and dried again.

When thick, heavy leather is to be transformed into patent leather or several surface coatings have to be applied, it is preferable to apply one at right angles to the other. The leather saturated with ethyl acetate is then spread over the coated plate and by submitting the plate and the leather to pressure, the parts adhere firmly to each other and permit the subsequent removal of the surface coat from the plate.

The following proportions are said to have given good results, viz.: 100 parts of ethyl acetate, aluminum salts, pyroxylin or a similar solution, 4 to 12 parts of nitrocellulose, 2 parts of glycerol, C.P., 3 to 12 parts of castor oil or any other vegetable oil, 10 to 80 parts of pure grain alcohol, 1 to 4 parts of spirits of turpentine, and the pigment or dyestuff, which is thoroughly incorporated in the solution. The proportions, however, have to be varied somewhat according to the thickness of the hides and skins. No details have been obtained as to the success of this process on a manufacturing scale.

Classes of Leather Coated with Pyroxylin. There may be said to be two general classes of leather which are pyroxylin coated at the present time in large quantities: (1) split leathers, and (2) leather for patent and enamel wear. The coating of chrome-tanned leather may perhaps be added as a third division.

Hides are usually split on a band machine, where, as its name implies, the cutting is done by means of an endless steel belt which travels with great rapidity over two large pulleys, the edge being kept sharp by the automatic grinding of emery wheels below the machine. In this rather complicated and expensive machine the tanned leather is fed between brass rollers to the knife's edge, the inequalities of the leather being provided for in the under roller by small eccentric brass sections, which in turn press upon a resilient rubber cylinder. If one cut is made, the outer portion is called a "grain split" and the inner, a "flesh split." If two cuts are made, three skins are obtained, an outer very thin layer, known as "buff split," the center portion or

"grain split" and the inner or "flesh split." It is not expedient to attempt the section of a hide into more than three splits, as each portion would then be too thin to be of much commercial value. The value of these splits decreases from the outside inward, except in certain instances where the buff split is so thin as to be useful only for the cheaper class of pocketbooks, satchels and upholstering. Five years ago split leather in the United States was difficult to dispose of, the supply being much greater than the demand. Now the reverse is the case, due entirely to development of the art of applying pyroxylin to the split surface.

In the coating for patent and enameled leather, whole or unsplit leather is usually taken, on account of the rigorous usage to which it must be subjected in shoes and upholstery. Split leather is seldom if ever used in shoe manufacture. The superposing of a series of coats, made necessary in the preparation of acceptable patent leather, makes it advisable to use a strong and heavy leather basis upon which to mordant the pyroxylin, and this is best attained by using the whole leather, without reducing its thickness by splitting.

Chrome-tan leather is usually colored white by processes to be described, although more recently attempts to make patent leather from chrome-tan hides, have apparently been successful. For "Zalol" and other leather cements see Chapter X.

To increase the hardness and resistance to wear, L. Krajewski [1] suggests filling the leather pores and coating solutions with hard bodies (e.g., carborundum, borosilicide) in a very fine state of subdivision. Such material might find favor in upholstering seats in smoking cars to scratch matches on.

Coating of Buff Splits. If the outer split from a skin is very light, it is called "light buff," and if slightly heavier, "deep buff." Until very recently the buff splits were simply dyed either with logwood and dimethylaniline, or an acid aniline dyestuff, and glazed by passing the leather through a glazing machine, which distributes a thin coating of egg albumen over the surface, the process being known as "seasoning." Buff splits are so thin as to have but little strength, and this is especially so with "light" buffs, for which reason, formerly but little attention had been paid to their profitable utilization. However, it has been found that the strength can be increased, and the wearing qualities considerably enhanced, by proceeding with this class of leather somewhat as follows:

After dyeing, preferably with an aniline dyestuff in distinction from logwood, the leather is thoroughly dried at a low temperature,

1. F.P. 402460, 1909.

and after cooling, spread out on a large table, and either tacked, or weights placed on the leather to prevent wrinkling. The first coat is placed on the inner or "wrong" side of the buff, and consists in thoroughly brushing in a solution low in castor or linseed oil [1] of which the following formula is representative:

Pyroxylin	6 oz.
Commercial wood alcohol, 97%	40 fl. oz.
Amyl acetate	32 "
Castor oil	4 "
Benzine 62°	40 "
Refined fusel oil, sufficient to make 1 gal.[2]	

The buff is hung up to dry over steam pipes, where it is allowed to remain several hours, preferably over night. The next morning, or when the solvent has entirely evaporated, the outer or hair side is brushed in the same manner with a thin pyroxylin solution, generally without oil, and seldom over 4 oz. strength. The leather is preferably spread out on a large glass plate, or glass-covered table for this coating application, and left there until practically dry, the last traces of solvent being removed by artificial heat. A satisfactory solution for this treatment would be:

Pyroxylin	4 oz.
Commercial wood alcohol, 97%	65 fl. oz.
Amyl acetate	25 "
Benzine 71°	30 "
Refined fusel oil, sufficient to make 1 gal.	

If it is desired to increase the gloss of the outer buff coat—which is usually unnecessary—from 4–12 oz. of boiled linseed oil are added to each gallon of the above formula. The introduction of benzine 71° instead of 62° is made advisable by the larger amount of lighter boiling-point solvent (wood alcohol) as compared with the previous formula. With all thicknesses of this leather except the deepest buffs, it is found that the two pyroxylin solutions penetrate entirely through the leather and anchor to each other, as well as the leather

1. The buff is of so light weight that a pyroxylin without vegetable oil does not make the coated leather too stiff, with the small amount of coating composition used.

2. The fusel oil is necessary to cause combination (physical) between the wood alcohol and benzine, which otherwise would be immiscible. Buff splits from sheep skins are called "skiver."

substance. Such coated buff splits are finding ready sale as material for the better grade of light-weight pocketbooks and the flexible covers of certain books, as loose-leaf ledgers and Oxford bibles. The inner side of these buffs, which is quite rough after coating, is not smoothed, because in all uses to which the buffed leather is placed the inner side is always lined, and hence invisible.

The bands in the inside of men's hats, called "hat sweats," are the buff splits from sheep, calf, or goatskins, calf being the highest in price. These bands are always dyed, but the dyestuff is usually not fast to saline solutions, so that formerly the color would come out on perspiring, and it was not uncommon for a hat band on a hot day to leave a dark streak on one's forehead. Now we see none of this, due to the fact that the buff split used in preparing the band is coated with a thin pyroxylin solution, substantially as outlined above.

In ordinary practice one gallon of solution is sufficient for properly coating 500–600 sq. ft. inner side, or 750–850 sq. ft. outer side, depending upon the thickness and porosity of the leather and the skill and carefulness of the workman. Buff split leather is seldom embossed. To imitate the odor of morocco leather, oil of birch or cade is added to the pyroxylin solution before the latter is applied to the leather.

Coating of Grain Splits. This is the most valuable part or "heart" of the leather, and its value depends in a great measure on the depth of the buff and flesh coats which are split off. It is evident that a thinner buff and flesh split results in a thicker and more valuable grain split. In the coating process the hides are first soaked in order to render them as pliable as possible, the skins being naturally shrunken from the astringent tanning and chrome liquors through which they have passed. As coated leathers are always sold by the square foot, the skins are soaked and nailed to frames, being stretched out all that is possible in order to obtain the maximum area. They are fastened to wooden frames with large tacks, where they are allowed to remain until thoroughly dry, when the tacks can be removed without the leather shrinking. This process is called "drying to get the measurement." Although a thicker and more dense hide will require a longer time to dry than a thin, porous one, the degree of dryness is determined by the "feel," and after the hides have been removed from the frames they are preferably kept in a warm, dry room to minimize subsequent absorption of moisture. It has been found that a dry hide coats more readily and the coating composition adheres more firmly than if the leather has been previously exposed to a damp atmosphere for any great length of time. Irrespective of the manner in which the skins

have been tanned they are usually coated in the same way, variations being made for the weight and porosity of the leather at the time the composition is applied. A hide is laid on a low flat table, preferably glass covered, and the prime or first coat applied, usually with a 2-inch brush with bristles 6 inches long. The pyroxylin solution is uniformly and thoroughly worked into the leather substance with the brush, until apparently no more will be taken up. In some instances the dust from the splitting process is removed from the leather and the surface roughened by a stiff brushing before coating, in order to produce a firmer anchorage for the coating fluid. Where the finished leather is intended for fine upholstery, hand bags, automobile trimmings and carriage-tops, castor oil and not linseed oil is used, the formula for a first-coat composition being:

Pyroxylin	8 oz.
Commercial wood alcohol, 97%	45 fl. oz.
Amyl acetate	20 "
Refined fusel oil	12 "
Castor oil	12 "
Benzine 71°, sufficient to make 1 gal.	

The pyroxylin is first mixed with the amyl acetate, and the wood alcohol with the castor oil. The two are combined and the fusel oil finally added in small portions at a time with much stirring. Any pigments introduced are first ground in a small amount of the castor oil. After the application of the first coat the skins are hung on frames over steam pipes, the temperature of which does not rise above 40°, where they remain until dry, usually about two hours. They are again placed on the table and all "knots" and "warbles" polished off by smoothing the leather with pumice-stone. Warbles are excrescences on leather caused by the deposition of the egg of the gadfly in the hide of the living animal and the purulent abscess which forms upon the hatching of the larva. The second coat is similarly applied, but the above solution—less the castor oil—is mixed in equal volumes with the formula above, i.e., the amount of castor oil is halved. More care is exercised in uniformly and thoroughly covering the skin, and it is left on the coating table until dry to the touch. Then the skin is placed on a frame and the remainder of the solvent carefully expelled at a low temperature. The large proportion of low-boiling solvent in the formulas renders it impossible to apply the composition with the slicker, for the evaporation would be too fast to enable a proper spreading before the coat becomes hardened. The third and final coat,

consisting of the formula above but with no castor oil, is thinned usually about one-half, and allowed to flow out and over the skin and to dry at ordinary temperature until "set." After a thorough final drying, the skin is ready for embossing. A plate embosser, similar to that described in Chapter XI is used, the temperature of the steam chest being kept close to 70°.[1] The leather is then considered finished, or if an extremely glossy appearance is desired, the hide is hung up and a weak (2–3 oz. per gal.) pyroxylin solution, in commercial wood alcohol and acetone only, sprayed lightly over the surface with an atomizer. The light boiling-point solvent allows of evaporation before the composition begins to flow or "run." If a "dead" or "mat" appearance is required, a pigment ground in fusel oil, and thinned with acetone, is sprayed on the leather in a similar manner. The volume of the spray is too small to affect the appearance of the graining.

In the process for coating grain splits as developed by S. Pianko and M. Knaster[2] castor oil and celluloid in solution are recommended, but experience has shown that the presence of camphor is entirely unnecessary. Leon Feval[3] recommends the use of so large an amount of castor oil in the first coat "that the inner coat or coatings will never entirely dry, and always remain in a 'tacky' or sticky condition." He makes the outer coatings sufficiently thick so that upon drying the outer will sufficiently protect the inner coatings. The process he describes as follows:

"The uncoated leather is first coated with a liquid containing the oil and nitrocellulose in solution and preferably diluted with alcohol with or without other materials, such as gums or pigments. This inner coating is allowed to set, (preferably at ordinary temperature.) The first or inner coating when sufficiently set will not be entirely hard and inflexible, owing to the presence of the large proportion of non-drying oil, but, on the contrary, will be tacky and more or less soft, flexible, and elastic. A second coating is then superposed upon it. This outer coating may be like the inner one except that it has a smaller proportion of the oil than in the inner coating. In this outer coating a larger proportion of pigment is used. The outer coating in some instances may contain no oil whatever, the effect of the oil in the outer coating being secured by the combination of the nitrocellulose of the outer coating with a portion of the oil of the inner coating. The idea of the outer coating is to serve as a finish to the inner coating,

1. If there is any tendency of the oil to remain on the surface due to the combined heat and pressure of the embosser, a piece of paper interposed between the embossing plate and leather will absorb any stains.
2. E.P. 28743, 1907; F.P. 385900, 1908; First Addition Mar. 9, 1908.
3. U.S.P. 848357, 1907.

the latter being always soft, and therefore impractical for a finished leather. If desired, a third or other coatings may be added, similar to the second. The process may be modified by making the second or additional coatings similar to the first.

"As an example for carrying out this process the following proportions may be employed: For a steerhide split or cowhide split of average thickness for the first coating a solution of about 13 lb. of pyroxylin dissolved in about 13 gal. of a mixture of 3 parts of wood alcohol and 1 part of amyl acetate. To this is added about 75 lb. of castor oil together with about 2 lb. of any commercial pigment, depending upon the color desired, ground in about 20 lb. of oil. The oil will therefore be at the rate of about 7½ lb. to each pound of nitrocellulose. The inner coating will set and will not permeate the leather to any appreciable extent. One reason why this is possible is the use of the wood alcohol in large quantity, so that the composition will not entirely or much of it permeate the leather and change the character of the coating from one of great elasticity and ability to stretch to a film formed largely of pyroxylin and incapable of being stretched. For the second coating the same amount of pyroxylin and amyl acetate is used, but with a smaller proportion of alcohol, depending upon the weather during the operation—on account of its tendency to absorb moisture and then precipitate pyroxylin. To this is added 16 lb. of castor oil.

"The amount of alcohol used in the second coating depends upon the weather during the operation. The second coating is in a position to absorb moisture, while the first coating is covered. Therefore if moisture be absorbed a spotted appearance in the coating results. It is possible to make it without alcohol; but the solution will penetrate too far unless other means be provided to prevent this, for the reason that the amyl acetate dries too slowly. The amount of oil in the inner coating is regulated by the thickness, texture, stiffness, and in some cases by the method of tannage of the leather, and also by the length of fiber on the surface, if the leather is a split. A thick and close-textured leather will require a larger proportion of oil than a thinner leather or one in which the texture is more open. In some instances chrome-tanned leather will require a smaller proportion of oil than a bark-tanned leather. The hand-buffed and machine-buffed leathers will require a smaller proportion of oil than the split referred to above, assuming the proportions to be the same in both cases. The proportions of oil to nitrocellulose should be varied when used in connection with other leathers—such as goatskin, calfskin, etc.—according to the above rule. The proportion may vary from 7½ lb. of oil to each

pound of nitrocellulose or even slightly more in some leathers down to very much less in other leathers. It may not well be reduced below 3¼ lb. to each pound of nitrocellulose. This proportion of oil, it is to be understood, is to be measured by the amount of nitrocellulose employed and does not in any way depend upon the amount of solution containing the nitrocellulose. The proportion of oil in the outer coating will vary according to the results desired. A smaller proportion of oil will give a leather having a "drier feel." Similarly a larger proportion of oil will give an increased sleekness of feel. The amount of pigment added should be sufficient to secure the desired depth of color, the proportions used varying with the results desired. The addition of gums or other oils cause a slight reduction of non-drying oil. For instance, if a substance, such as camphor is used, and which is soluble in the solvent used to dissolve the pyroxylin without acting on the pyroxylin, it would be in the proportion of about ¾ lb. to each pound of castor oil used. After the leather is coated it may be further finished by graining, embossing, or pebbling in the usual way.

"By microscopical examination of a section of leather coated by this process the different coats may be identified if they have been applied at an interval of two or three days between each, the coats containing the large proportion of oil showing in section a heavier or thicker coat of a peculiar gelatinous appearance."

Coating of Flesh Splits. These, being quite porous and not very strong, are used after coating for cheap upholstery, carriage trimmings and similar purposes. Heavier coating compositions are used on account of increased porosity of the leather fiber, but otherwise the coating is essentially the same and is applied to the outer or grain side. The light and fancy colors are seldom used with this class of leather, and only brown and black shades.

M. Pianko [1] attempts to produce the equal of the more expensive grain-split coated leathers by a rational and apparently satisfactory process in which the least expensive flesh split is attached by means of pyroxylin to a coated thin buff split, thus giving the weight and appearance of grain-split leather. This ingenious method consists in securing the desired pliability by first coating the flesh leather with a linseed oil composition containing sufficient pyroxylin to readily combine the surface with a pyroxylin cement. A light buff-split leather is then lightly coated with a pyroxylin composition high in nitrocotton, and either free from or containing just sufficient linseed oil to impart a high gloss. Flesh splits of the cheapest hides may be

1. E.P. 9304, 1902.

thus cemented to the buff splits of the more expensive ones. This method allows of much amplification and apparently opens up possibilities for the preparation of leathers of any desired qualities by combining, say, a porous split flesh, with a hard buff split, a leather of nearly the value of a grain split being thus produced, and at a fraction of the former cost. This suggests the possible solution of the problem of artificial patent-leather formation, except instead of applying the coating directly on cloth, the thinnest buff splits are attached to the cloth and the whole finished as with grain leather. The various processes of "boarding" and "pebbling" could be applied to a cloth surface cemented with a split leather, and the whole be then embossed in the usual manner.

Chrome-Tan Leather. There is but little difference in treatment of chrome-tan as distinguished from bark-tan leather, so far as coating is concerned. Chrome-tanned leather is less porous, more firm and less receptive to fluids than the same skin tanned with tannin. Therefore in general chrome-tan leathers require pyroxylin preparations of greater fluidity in order to obtain the desired result. If enameled or patent leather is to be made from a chrome-tan skin, especial attention must be paid to the dyeing of the skin black, as the dyestuffs penetrate the leather very slowly. In the two-bath chroming process, it is essential that the fat be removed from the skins as much as possible, and this is done either by hydraulic pressure or by extraction of the fat with benzine or other solvent. The hair is removed by de-liming, then bathed as in tanning, washed for a few minutes in a weak lactic acid bath, and if the skins are not sufficiently purified, a final washing in a weak, warm borax solution follows. Usually the skins are plumped by immersion in a "pickling" solution of dilute acetic or hydrochloric acid, containing from 3–10% of salt. The first bath of the process consists in adding to the pickling solution the required amount of potassium bichromate or sodium bichromate dissolved in hot water the hydrochloric acid already present increasing the penetration of the bichromate. The skins and solution are placed in a revolving cylinder and turned or "drummed" for a sufficiently long period and until the center of the heaviest hide shows a uniform green color. The skins are then removed and allowed to drain for from 6–18 hours to equalize the penetration of the chromic acid, the skins being kept excluded from the light to guard against reduction of the bichromate. After this they are washed free from bichromate, dried and finished in the usual manner.

The second bath of the process consists in reducing the bichromate to chromic oxide, usually by an acidified solution of sodium hypo-

sulphite (thiosulphate), the skins being dipped singly into the reducing bath, or a number are placed in a vat and agitated, the solution in this instance being weaker, and the time of agitation increased. Often 5% of commercial hydrochloric acid calculated on the weight of the skins is added to the vat liquor, the addition of the acid changing the color of the latter to a milky white color. The skins first become yellow, but finally assume a bluish-green color, and lose the slippery rawhide feel as they become changed into leather. They are finally carefully washed and dried after stretching on frames.

In the "one-bath" process, the oxidation with chromium and reduction of the same is carried out in a single operation, and "chromion," "tanolin," "vulcanochrome," "corin," "chromatin" and "bichrone" are trade names for solutions of this nature. A solution of chromic chloride is prepared by dissolving chromic oxide in commercial hydrochloric acid, which is then partially neutralized with sodium carbonate, the resulting liquor consisting essentially of normal and basic chromic chloride, sodium chloride and a small amount of free hydrochloric acid. The salt serves a useful purpose in preventing the drawing or contraction of the fibers during the chroming process. The partial reduction of the chromium in the basic state, it is claimed, makes subsequent reduction unnecessary; simple immersion of the skins in the bath the required length of time to insure thorough penetration and subsequent washing, constituting the process. It is claimed that the free chromic acid produced in an acidified bichromate solution such as is used in the two-bath process weakens the leather fiber, and the smell of sulphur dioxide from reduction of the thiosulphate in the two-bath process is not only disagreeable to the workmen, but destructive to the leather as well. Eitner has also made some preparations, "cromul," "cromar," and "cromast," containing organic matter intended to modify the action of the chromic acid.

A large and growing trade in white chrome leather coated with pyroxylin has developed as the result of the following method of procedure. By treatment of chrome-tan leather after separation into the usual three splits with dilute oxalic acid in the presence of sulphuric acid, the light-green color of the leather is changed to a very light fawn—almost white. By pressing out the sulphuric acid and oxalic acid hydraulically, and immediately afterwards immersing the skins in a bath containing calcium carbonate in suspension, which is being rapidly stirred in order to prevent settling of the carbonate, the latter penetrates the skin, combines with the sulphuric and oxalic acids, forming white precipitates of the oxalates and sulphates of calcium in the interstices of the fiber, and gives to the leather a per-

manent white color throughout. The carbon dioxide evolved as the result of the interaction opens the "pores" of the leather and makes the subsequent penetration of a pyroxylin solution much less difficult. After complete union of the calcium and acid, the leather is taken out of the bath, washed until neutral, stretched on frames and dried. When dry, the superfluous oxalate and sulphate is dusted from the leather surface, when it is found that the entire leather substance is of a pure white color. By smoothing this surface with pumice, and applying a 6–8 oz. pyroxylin solution containing a small amount of castor oil to increase the pliability, a glossy white leather results, of great strength and suppleness. Before the above process was evolved it was customary to take the light-green chrome-tan leather, and coat it with a pyroxylin composition containing a white pigment in suspension. It was found, however, that so many coats were required to completely cover the green shade, that the film of pyroxylin and pigment combined was so thick as to crack with great ease, and if the number of pyroxylin coats was decreased, the covering power was correspondingly diminished so that the green color of the chrome would often show through the superposed opaque white coats. Infants' white shoes and the other uses of white leathers except ladies' gloves, have been fields in which this class of coated leather has found a ready use. As might be inferred, the wearing qualities of leather coated with pyroxylin free from pigment are much superior to that in which the white color is applied with the pyroxylin, due to the general fact that any inorganic solid in a pyroxylin coating composition rapidly reduces its adhesiveness and tensile strength.

Preparation of Patent and Enameled Leather. Until quite recently, the great bulk of the enameled and patent leather produced for the market was still manufactured by the original process of using boiled linseed oil in the several coatings, the first coat containing a pigment to impart the desired color, the final coats consisting of linseed oil prepared with driers to form a readily flowing and gloss-giving varnish. The process is slow and laborious, for between each coat, the surface is smoothed or "pummied" by polishing with a piece of pumice stone. The coatings were exposed outdoors to sun and dust to complete the drying process, and even with the utmost care a great many sides of leather when finished were of but second quality by reason of defects in the finished article.

The advantages of pyroxylin coating as compared with the above, are ease and facility of manipulation; elimination of "sunning" and exposure to dust, the absence of sunlight for a period not impeding the process; drying at a low temperature which can be readily con-

trolled; and the production of a gloss and luster on a hard surface and one in which the coefficient of expansion is low, so that the greatest defect in patent leather—that of cracking on exposure to sudden changes in temperature—is in a great measure obviated when the coating is properly conducted. It is customary to dye the leather black before coating.

The process of coating leather with nitrocellulose is comprised in the following three distinct steps: (1) boiling the linseed oil; (2) preparing the pyroxylin solution and incorporating it with the oil; and (3) the actual coating and finishing of the leather. A complete process is herewith outlined in which the latest methods and the reasons therefor are given, and which may be considered as fairly representative of the most successful present-day methods.

Boiling the Linseed Oil.[1] A convenient quantity of oil, say 100 gal., is placed in an iron oil-boiling kettle mounted on wheels and run on a track so that the kettle and contents may be run on and off the fire, coke or wood charcoal being preferably used as fuel. An oil-boiling thermometer is attached to the inside of the kettle, which should not be over half filled with oil. After the fire has been started, the temperature of the oil has arisen above 100° and frothing due to escape of moisture in the shape of steam has subsided, the driers, previously mixed in a portion of the oil some hours before, is added in small portions and thoroughly stirred in.[2] One-half oz. raw umber and ⅔ oz. Chi-

1. The essential point in boiling linseed oil for this and similar purposes is to keep the heat sufficiently low so as to start no destructive distillation to "crack" the oil, but simply sufficient heat to induce polymerization of the glycerol esters of the oleic, linoleic, linolenic and *iso*linolenic acids present, and induce the formation of metallic oxide combinations with the unsaturated acids above named. If the temperature is kept moderately low, and the oil is constantly stirred to eliminate the decomposition products of glycerol, as acrolein, the polymerization of the unsaturated fatty acids is accelerated with the formation of complex substances which more rapidly absorb oxygen. The nature of the dryer added appears to be of less moment than the proper combination of that drier with the fatty acids present. On storing linseed oil, the moisture and mucilaginous matters gradually subside, certain oxidation processes are carried on in the oil, and it thereby acquires a higher value, especially in the preparation of varnish similar to the above. Such oil, often kept for years, is called "tanked" oil, and its suitability for pyroxylin combination is determined, in a measure, by heating the oil in a test tube, when no mucilaginous matter should separate and the oil should remain clear. This "mucilage" consists of pectinous products, phosphates and sulphates (G. Thompson, J.S.C.I., 1903, **22**, 1005). To facilitate settling, the oil may be refined by treatment with 1–3% sulphuric acid, when a charred mass forms which subsides and takes with it the bulk of the impurities. The refining processes by treatment with ozone apparently have not been successful. In resplendency and elasticity of film, it is the general opinion that oil settled and clarified by time makes the most satisfactory coating compositions. See "Linseed Oil Boiling for Enameled Leather." G. S. Wolf, U.S.P. 632163, 1899.

2. In the proportions named, the driers apparently go entirely into solution. Lead has been found unsuitable, as oil boiled with litharge or other lead compound is prone to crack, perhaps from a continuation of the oxidation process after being

nese blue, per gal. will give satisfactory results.[1] The heat is continued, stirring preferably being continuous, the increase in temperature being at the rate of about 10° each 15 minutes until a maximum of 275° has been reached. The oil by this time will usually be of the consistency of thick molasses;[2] if not, heating is continued, always with continued stirring, and in order that the temperature may not rise above 275° the oil is taken off the fire and stirred until the temperature has been reduced a few degrees. These successive "heats," as they are termed, are continued until the proper viscosity is obtained. The kettle and contents are then removed from the fire, covered and left at rest until the temperature has fallen to 100°, when 20% (by volume of original oil taken) of amyl acetate is added at once,[3] and thoroughly incorporated with the oil. The cover is again replaced and the contents left to cool to atmospheric temperature, when it is removed and filtered through a paper filter in a plate-filter press, after which a sample of the oil-amyl acetate when placed on a sheet of glass and interposed between the observer's eye and sunlight, should show an entire absence of solid particles or granulations. The mixture is then tanked until ready for use.

Preparing the Pyroxylin Solutions. In general, the nitrocotton—which, when dissolved 6 oz. to the gal. in amyl acetate 60 parts, benzine 40 parts, has a viscosity about like that of rape oil—is considered most suitable. There has been much investigation as to the best combination of solvents, the highest authorities agreeing that the amount of amyl alcohol (refined fusel oil) should not be far from 20–22%. But little wood alcohol and no acetone or ether are used.[4]

applied to the leather. Large amounts of driers are not only unnecessary, but harmful.

1. "Chinese blue" is a complex ferric ferrocyanide of variable composition.

2. Corn, peanut, rape, hemp, and mustard-seed oils all appear to be inferior to linseed for this purpose. Chinese or Japanese wood oil, although probably the most readily oxidizable oil known, is of no value in pyroxylin coating compositions, for in boiling, if the temperature of 125° is reached in the boiling process, the oil may suddenly solidify in the kettle. See process of W. Blakeman, U.S.P. 767682, 1904.

3. The acetate should be added quickly and stirred thoroughly so as to cool the mass as soon as possible and thus minimize evaporation of amyl acetate. If the oil is left until cold before the addition of acetate, the mixture may appear slightly granular even after filtration, whereas when added hot, a perfectly homogeneous liquid will result. The tests usually applied are to take a small portion of the oil from the kettle on a spatula, and testing its "stringing" qualities between the thumb and first finger. In some works 5–10% of the amyl acetate is substituted by turpentine.

4. All on account of rapid evaporation due to low boiling point. A successful coating composition must be sufficiently slow in evaporating so that when applied to a large skin the operator will have sufficient time to thoroughly and properly cover the skin before the solution has evaporated to such a consisteney as to make spreading difficult from the tendency of the composition to "rub up." This is a most important point in the preparation of this class of pyroxylin solutions.

Benzine 62° Bé. is preferable to the lower boiling 71° Bé. fraction. The amyl acetate should be preferably rectified and the higher boiling-point fraction used, and this should be practically free from propyl acetates.[1] The dyestuff is one of the modern spirit-soluble nigrosines of the highest concentration, and hence free from dextrin and appreciable amounts of salts. The dyestuff is filtered after first dissolving in a mixture of equal volumes of amyl acetate and benzine. A typical coating composition would possess about the following composition:

Pyroxylin	8	oz.
Amyl alcohol	26	fl. oz.
Amyl acetate	70	"
Benzine 62° sufficient to make 1 U. S. gal.		

The amount of nigrosine required will depend upon the brand and strength of the dyestuff and the depth of shade required. The coating composition should be made up a few days before use[2] and preferably paper-filtered through a plate press.[3]

The oil (containing 20% amyl acetate) is mixed with the pyroxylin solution, by adding the latter to the former and not the reverse. The proportions vary with the different coats, being higher in oil with the first coat, and free from oil in the final coat, where a hard surface is desired. Satisfactory results have been obtained where the first coat consisted of 1 part oil mixture, 3 parts pyroxylin, and the second coat,

For the same reason the amyl acetate should be high boiling and reasonably free from lower acetates, and benzine 62° is preferable to 71°. No doubt, also, the fact that best results are obtained with a preparation high in amyl alcohol is due in a large measure to this fact, although the latter, it will be remembered, is an absolute non-solvent of nitrocotton. With solvents of high boiling-points as outlined above, when the usual amount of composition is spread over a large skin (about 3 ounces for a skin aggregating 15 square feet) the same can be manipulated and brushed in thoroughly without sufficient loss of solvent to make the lacquer difficult of brushing or spreading, or causing the composition to granulate and roll up on the leather.

1. Because American fusel oil is first water-washed and the lower alcohols thereby removed, American fusel oil acetate is of higher boiling-point than a similar product made from German and Russian oil, in which washing out of the lower alcohols is not compulsory. See Chapter VI.

2. When a pyroxylin solution is allowed to stand a few days the finer insoluble particles apparently combine into larger ones, for it is noticed that a freshly prepared solution does not filter as readily or clearly as one which has been allowed to stand.

3. Two points of importance in determining the suitability of a given pyroxylin solution for leather coating are freedom from " specks " (clearness) and miscibility. The former is of great importance because each speck means a " pinhole " or small excrescence in the leather when the coating is applied, these pinholes often being the weakest points in the leather covering and hence the place which breaks first in wear. Therefore, the advisability of paper press filtration. The lack of satisfactory coating results undoubtedly are often due to overlooking this point.

1 to 6 respectively. It is considered better practice to mix oil and pyroxylin several days before use.[1]

Applying the Compositions to the Leather. The principal point to recognize in coating is the formation of a film at the same time flexible, yet hard and tough. These two as applied to leather coverings are entirely antagonistic, i.e., the tougher the coating the less flexible will it be, and conversely, any increase in the flexibility will be a decrease in the strength of the coating product. In coating leather for a definite use or purpose, it must be decided how much one will concede to the strength of the leather covering to obtain the greatest flexibility. The fact that a compound of pyroxylin is hard and bends with difficulty does not necessarily imply that flexibility and elasticity are thereby decreased. Admitting that the non-drying and some of the drying vegetable oils added to coating compositions lessen the strength and durability of the applied coating, it follows that the greater the amount of oil originally present in the leather, the greater will be the difficulty in obtaining a tough exterior coat. The condition of the leather before coating, therefore, is of extreme importance in obtaining uniform and satisfactory results. In applying any leather covering, the composition must first obtain a hold on the leather substance itself as a basis for the building up of successive coats into a satisfactory whole. If the first application does not adhere with the requisite firmness, it is evident that successive coats, while they may completely unite to the next preceding coat, yet the whole coating may come off *en masse*, due to defective adhesion of the primary layer. Therefore the first and most important point in pyroxylin leather coating is the formation of a sufficiently firm foundation, as a nucleus upon which successive layers may be built. It is also of great importance that each coat should be thoroughly dried before the next is spread upon it, else the new solvent will cut through into the under coats, and pull them from their anchorage, the result being a loosening of the entire coating layers or the formation of " pinholes " due to uneven evaporation of solvent.

1. To judge whether the mixture is perfectly homogeneous, a small amount is allowed to run off from a glass plate and the plate interposed between the observer and the light. If the oil and pyroxylin have not combined properly, the mass will appear slightly granular. No specks should be visible to the naked eye. If such can be detected the oil-pyroxylin mixture should be paper-filtered. It is unnecessary to state that these solutions must be carefully protected from dust. It is stated to be a common practice when the oil and pyroxylin solution go together with difficulty, to add a small amount of acetic or nitric acid (not over 0.5%) and stir vigorously, when the oil-pyroxylin mixture will often lose its granular appearance and become homogeneous. The reason for this is not apparent to the writer, and the free acid must materially decrease the viscosity of the mixture, if the latter is allowed to stand for any great length of time before use.

The leather is first soaked, tightly stretched on frames by tacking until dry and with the skins still on the frame then placed one at a time on tables preferably covered with glass. The hide is carefully smoothed out and thoroughly and vigorously brushed in order to remove any dust or extraneous particles which might interfere with the smoothness of the coating or the firmness of its attachment. The brushing also superficially roughens the surface and presents a better surface for adhesion. A small amount of the oil-pyroxylin solution which has been warmed to 30–32° is taken up on the side of a blunt knife called a "slicker," the amount depending on the adroitness of the workman to thoroughly incorporate the mixture in the hide before evaporation is carried to a point when the pyroxylin begins to precipitate out. The mixture is thoroughly and evenly rubbed in the hide surface until apparently no more can be assimilated. This amount will vary within wide limits, depending on the size and receptive nature of the hide.[1] A brush is not suitable for applying this coating, as the penetration cannot be as thoroughly carried out when brushed as when actually rubbed in. After partially drying on the table, the hide (still fastened in the frame) is placed over steam pipes in a frame, the temperature of which does not rise above 35° and left to dry usually for 24 hours. The surface is then lightly smoothed with pumice stone in order to "polish off the nap," before the second coating is applied.[2] This coating, as stated, contains about half the amount of oil of the first coat, the solution being brushed on with long bristle brushes, less often with a sponge. Wherever places appear in the hide which seem to have been coated too lightly in the first operation or which were pummiced off too closely, a larger amount of coating material is applied, a primary object of the second coat being the formation of a uniform, smooth base upon which the final coat may be flowed. The leather is allowed to remain on the table until the coating has "set," when it is "ovened" or dried as before. This coating is not to be considered as sufficiently dried if a smell of solvent can be detected when the film is peeled off with a blunt instrument. In some methods, two intermediate coats are given, being spread on quite thinly, but if the first coating has been properly applied and the resulting surface uniformly smoothed, the second coat when dry will present a smoothness such that when the final coat is brushed over, and dried, the surface produced when viewed by reflected light will be entirely devoid of undulations or solid particles. In enamel

1. The more porous the hide, the less fluid and heavier the pyroxylin solution applied, and conversely.

2. Visual examination of a hide is the best criterion of the amount of coating solution to be applied, which skill comes only by experience.

leather the final coat is usually pyroxylin without oil, while in patent leather, where the highest gloss is desired, a small amount of linseed oil is added to the pyroxylin solution. This last coat should be quite thin, and contain sufficiently high boiling-point solvents, so that when applied to the leather surface the final coating will admit of repeated brushing without showing the brush marks, and will ultimately flow out to a highly glossed even surface. On the other hand, the final coat must, however, be applied with such dispatch that the former coats are not sufficiently softened by the solvent so as to rub up in the brushing-out process. After a final drying, still at reduced temperature, the leather is taken out of the frame, and if not quite flexible enough a coating of linseed or castor oil may be given the under side of the hide.[1] The finished leather should not be cut and worked up before a week after coating, to give plenty of time for the last traces of solvent to evaporate and the coating to assume the maximum hardness. This process with properly tanned hides and due attention to details results in the formation of patent and enamel leather which should fully withstand the rigorous requirements of the trade. "Linseen," "cellulone" and "patentoid" are trade names for linseed oil-pyroxylin leather-coating compositions.

Production of Colored and Fancy Coatings. The color, a dyestuff[2] (preferably), or a lake, is added to the inner coating compositions. Wherever possible the leather is dyed the color desired, so that the coating material may be free from dyestuff or pigment, both of which, especially the latter, materially weaken the pyroxylin film. The lake or pigment is first ground in a small amount of the vegetable oil used, or if a dye, is dissolved in wood alcohol and amyl acetate and filtered before use. Otherwise the coating processes are the same as previously described. The coating operations for goat, calf, sheep, and various other hides do not materially differ from the descriptions given above, any variations depending rather on the thickness of the leather and its compactness due to the tanning or chroming processes, rather than to the origin of the pelt.

1. Or the under side of the coated skin may be slightly "fat liquored" by lubrication of the fibers with degràs or other oil.

2. Among the single acid dyestuffs suitable for dyeing vegetable-tanned leather are, azo yellow, phosphine, chrysoine, Indian yellow R., naphthol yellow S., Cuba yellow, turmeric yellow, fast acid yellow for yellows; solid-, acid-, fast-, resorcin-, dark nut-, and acid-browns, mikado brown B., for browns; scarlet R., crocein scarlet 3 BN., orange 2, mandarin G., bordeaux G., atlas orange, and fast red A., for reds and oranges; guinea-, acid- and light-green, and erioglaucine for greens; acid- and formyl violet; Bavarian-, marine-, and solid-blue; among, the basic dyestuffs are: chrysoidin, vesuvin, rheonine, and bismarck brown; auramine xanthine, canella, coriphosphine, paraphosphine and acridine yellow; methyl, methylene, solid and malachite greens; saffranine, fuchsine, rhodnline and Russian red and the methyl and crystal violets.

The Coating of Furs and Skins. The unusually heavy demands made on the fur industries for coats and cloaks, mainly attributable to the rapid rise in the use of the automobile, has brought out a process for the treatment of the flesh side of tanned furs in order to increase their warmth. This consists in treating the fur with a plurality of pyroxylin coats, the number and nature of the coatings depending somewhat upon the source of the fur and its relative cost. Ordinarily four pyroxylin coats are applied to the fur after tanning. If the garment is to consist of but few pelts or pieces, the cold-proofing is best done on the skin in the raw state, that is, before being worked up into the garment. If, on the other hand, however, the garment is to be composed of many pieces sewed together, best results are obtained by applying the coatings to the finished garment, that the thread holes and places where two pieces are sewed together may be filled with the pyroxylin as well. In both instances the solutions and number of applications are the same. If the pelt as a whole is to be coated, it is spread over a hard smooth surface, usually a glass-covered table, and a coating mixture high in castor oil first applied of a composition somewhat as follows:

Castor oil	16 oz.
Pyroxylin	8 "
Commercial wood alcohol, 97%	30 "
Amyl acetate	30 "
Refined fusel oil	25 "
Benzine 62° sufficient to make 1 gal.	

The pelt is usually first thoroughly moistened with a mixture of equal volumes of wood alcohol and amyl acetate, to make the skin more receptive to the pyroxylin and induce deeper penetration of the fluid. While still moist, the first coating is applied with a stiff brush and thoroughly worked in, until apparently no more will be taken up by the skin substance. Then a heavy coating is placed on the inner side of the fur, and the whole allowed to dry at ordinary temperatures in a fairly dry room, which requires from 24 hours upward. Drying is completed at a temperature not exceeding 50°. It is very essential that this coating be thoroughly dry before the next one is applied, that the subsequent coat may not too deeply cut into the prior one. In order that the coating composition may be insecticidal, naphthalin, camphor, salicylic, benzoic and cinnamic acids and other insect-repellant chemicals may be dissolved in the wood alcohol used in the coating composition. The use of naphthol and naphthalin has to be

guarded against, for these often affect the shades of the dyestuffs with which the fur has been colored. The second and subsequent coats are substantially alike, and differ from the first or "prime" coat in being entirely free from oil. They are applied in a similar manner. It is said that by means of this pyroxylin coating process, but little additional weight is added to the skin, while the warmth of the garment is increased very materially, and the life of the skin in many instances greatly prolonged.

To improve the wearing qualities of tanned boa constrictor and other serpent skins and the skins of certain fish as the shark, all of which find ready sale, they are preserved from wear and a gloss is imparted to the skin, by coating both sides with a 5–6 oz. pyroxylin solution containing from $\frac{1}{4}$–$\frac{1}{2}$ oz. arsenious oxide per gal. of solution to guard against the ravages of insects. When arsenic forms an ingredient of the coating mixture, it is usual to dip the skin in a final solution of pyroxylin containing no antiseptic. Ornaments and reticules made of skin thus prepared can be cleaned by washing with soap and warm water.

CHAPTER XIII

ARTIFICIAL FILAMENTS

Of all the textile fibers, silks are the simplest in structure, most perfect, and most highly prized. This undoubtedly accounts for the fact that the silk industry is one in which production has never been in excess of a constantly increasing demand. It is therefore quite natural that with a subject so alluring financially, many early endeavors were made to prepare substitutes which would possess in a high degree the desirable properties of luster, elasticity, and strength, properties so highly prized in natural silk. It was reasoned that the silk fiber, being devoid of cellular structure and consisting primarily of the solidified liquid contents of the glands of the silk worm,[1] would be apt to offer a much more inviting and remunerative field for speculation and experiment in attempting to imitate it artificially, than would the more highly organized fibers of cotton or wool.

It would only be necessary, it was reasoned, to project an acceptable liquid of known viscosity and total solids through orifices of a desired diameter, and thus form filaments which, like those of natural silk, must be insoluble in water and of sufficient strength and elasticity

1. Of other artificial filaments may be mentioned spun glass, which may be formed by rapidly drawing out a glass rod heated until soft. As spun glass may be prepared from colored glass, the product may and has been used for the production of colored fabrics. Dresses made entirely of spun glass were exhibited at the Columbian Exposition of 1893. In consequence of the low elasticity of glass, the commercial value of textiles so produced is practically *nil*. Such fabrics rapidly become disintegrated on account of the brittleness of the fiber, the minute particles of glass which are continually separated from such fabrics being highly injurious when inhaled. The curly glass wool used for filtering purposes is produced by drawing out two glass rods of unequal hardness to a double capillary thread. On cooling these curl up on account of their different coefficient of expansion. From very early times silver, gold and other threads have been used in the decoration of royal fabrics. The so-called Cyprian gold thread, famed for its beauty and permanence in the Middle Ages, is now produced by covering flax or hemp with gold foil. When molten slag is projected against a steam blast, the slag is blown into a very fine fiber, used as a packing material and for insulating and fireproofing purposes. Asbestos is probably the best known of the mineral fibers, being a double magnesium calcium silicate containing iron and aluminum. Asbestos fibers are difficult to spin in themselves, but when mixed with cotton it is readily woven into fabrics, the cotton being removed by afterwards heating the fabric to incandescence. Asbestos is difficult to dye, the albumen and substantive dyestuffs being most applicable.

to admit of spinning and weaving without serious deterioration. The entire problem is comprised in the foregoing sentence, and as yet it has not been solved in two particulars, viz., a solution has not been found which would immediately set to a fiber of the required strength when a liquid is projected into the air as it occurs in nature, all efforts so far having had to rely on liquids to coagulate or set the thread. Secondly, from a chemical standpoint, the fluid present in the gland of the silkworm differs only from spun silk apparently in being a liquid, because as soon as it is artificially removed for purposes of analysis, it becomes hard and identical with the spun filament. Much research has been expended—as yet without material success—on the subject of utilizing silk waste and noils by converting them into a solution without altering their chemical nature or physical deportment, and work with them along methods similar to those used with collodion solutions. The mechanical portion of the problem appeared to be merely the formation of threads by forcing the liquid through the orifices into the coagulating or solidifying media, air being the least expensive and most readily obtainable. Up to the present time, however, all the artificial silks produced have been lacking in flexibility and strength, and their present increasing popularity, and hence consumption, are mainly dependent upon the fact that in luster and appearance they equal, if not exceed, that of the natural product. It is probable that the extreme brilliancy and softness in feel are the two factors which prolonged interest in the artificial product, until sufficient research in other directions led to improvements which gradually eliminated or decreased the other objectionable features, and caused such a demand for the yarn in comparison with the possible supply, that the price of the artificial silk for a time actually exceeded that of the real material.

The rise and development of the artificial-silk industry are an enumeration of difficulties overcome and ingenuity displayed in formulating ways and means whereby some form of cellulose, usually cotton, may be formed into a fluid and attenuated into merchantable filaments, and strikingly exemplifies the fact that man has learned to apply practically the lessons taught by Nature. It was Réaumur who in 1734 first explained intelligently the methods of the silk-worm in forming silk, and conceived the idea of accomplishing the same result artificially. Réaumur showed that silk was the product of certain glands located on the under side of the body of the silk-worm, and that a portion of the albumen of the silk-worm's food is transformed into fibroin and secreted in the glands. It therefore was quite natural that he should have propounded the question whether it

would not be possible and practicable to spin other semifluid materials, such as, for example, certain varieties of pitch, into thin filaments and thus produce a silk-like substance equally as serviceable as the fibroin of the silk-worm. It appears that Réaumur's time was undoubtedly ripe for theoretical discussion and speculation, but it was not ripe for the purpose of overcoming the technical difficulties presented, both chemical and mechanical. It was not until one hundred and fifty years had elapsed before sufficient combined experience had been accumulated to attack the problem in a successful manner.[1]

1. As stated in Sci. Am. Suppl., No. 1446, p. 23173, of a translation from Prometheus:

"Silk fiber is distinguished from all other fibers by the circumstance that it is not built up of cells, but constitutes a congealed fluid stream. This stream is produced by the silkworm, by discharging the contents of its glands through minute openings. As it comes into contact with the air the silky substance solidifies, thus producing a thread which can be continuously spun on until the gland is exhausted. If the same result is to be produced by the means at our disposal, it would be necessary merely to discharge a suitable fluid from its containing receptacle through a very fine outlet. We should then reproduce the exact process carried out by the silkworm, and we should then form silk. But at this stage obstacles are encountered, which Réaumur, although he did not clearly recognize them, still suspected their existence. To use his own words: 'It will be impossible to produce as fine threads as are produced by the silkworm, but it should not be impossible to spin out varnishes into threads of sufficient fineness.' In this statement the great technical difficulties of the problem are clearly indicated.

"That a fluid stream can be congealed can hardly be doubted; but the task consists in ejecting a stream of sufficiently small diameter. A stream is produced because every fluid has a definite cohesion. But fluids are subjected to the laws of another force besides that of cohesion, and this force is the force of superficial tension, according to which every fluid constantly tends to assume the form that will most uniformly occupy space. This form is a globe. The greater the mass of the fluid, the greater will be the cohesion; the smaller the mass the greater will be the superficial tension. For this reason every fluid stream, which is nothing more nor less than a cylinder of infinite length, will tend to divide itself into drops, that is, into individual globules. The finer the stream, the greater will be the tendency to produce globules. When streams of extreme fineness are produced it is not possible to prevent the formation of globules. Careful observation of a stream of water emerging from a pipe will prove that, as the stream becomes finer, a ring-like furrow will be produced, which gradually approaches the pipe outlet and disappears in a drop.

"The superficial tension must overcome the cohesion, and the cohesion varies with different fluids. For this reason some fluids are particularly well adapted for the formation of drops. The resistance which a fluid opposes to the tendency to form drops is called its viscosity. Fluids which have a very low viscosity, such as ether, can hardly be made to form a connected stream. On the other hand, very viscous fluids are not easily separated into drops. It therefore follows, that it would not be possible to produce artificial silk from every congealable fluid; but that it would be necessary to employ a viscous fluid which, as it is ejected from a fine opening, will form a continuous stream.

"A beautiful example of the utilization of physical processes in producing artificial silk is offered by the manufacture of shot. Most metals in their molten condition, despite their high specific gravity, have a low viscosity. A stream of metal, therefore, is easily separated into individual drops which solidify as they cool off. Mercury is an admirable example of a metal of small viscosity but of enormous superficial tension. If molten lead be poured through a sieve rotated on top of a tower, the streams of fluid metal immediately separate into drops which are congealed and solidify before they reach the bottom. A large number of

The idea was resuscitated in 1885 by Audemars of Lausanne, who combined nitrated mulberry branches with rubber, and formed a solution which he drew out into a thread.[1] Apparently he considered that cellulose nitrate made from mulberry—the food of the silk-worm—must possess peculiarly desirable properties. Crookes, Weston,[2] Swan,[3] Swinburne,[4] and F. Wynne and L. Powell,[5] were the next to revive the subject of the use of nitrocellulose for artificial threads, which they did almost simultaneously in endeavors to produce electric light filaments by impregnating nitrocellulose with rare earth oxides, and who used respectively cellulose nitrates dissolved in glacial acetic acid, nitroglucose made plastic by heat, and cellulose dissolved in zinc chloride solution. All used alcohol to coagulate the formed thread. The commencement of artificial silk formation upon which the modern industries have arisen may be said to date back to 1884, when Count Hilaire de Chardonnet deposited a sealed document with the French Academy of Sciences, which, when opened on Nov. 7, 1887, bore the title "On an Artificial Textile Mate-

round balls of lead, in other words, shot, is the result. The opposite of that which occurs when lead and mercury streams are separated into drops must be accomplished by the fluid which is to yield artificial silk. In other words, the fluid must be viscous. But since viscous fluids flow slowly, and since superficial tension is overcome by causing the particles of the fluid to move forward in the given direction, it is not enough simply to press the fluid out of an opening in order to form streams of sufficient fineness. The superficial tension would simply lead to the formation of drops. This can be proved by pouring a solution of rubber, which is very viscous, into a vessel provided with a very small hole. Out of this hole there would emerge not a stream, the diameter of which would correspond with that of the hole, but thick drops which cling to the vessel. If the hole be fine enough, this drop may congeal through vaporization, thereby closing the hole and preventing the egress of further drops. A fluid of lower viscosity, such as water, would flow out of the vessel in a short time in a fine stream.

"In order to allow viscous fluids to flow out of the vessel in a fine stream, the pressure of the fluid must be in some way increased. This can be done by assisting the pressure with suction. If the drop of rubber had been touched with the finger at the moment when it was formed, and the finger then withdrawn, the rubber solution would have followed in the form of a fine thread. This is the process employed by the confectioner in spinning taffy or candy. And this is also the process employed by the silkworm in spinning silk. For the creature secures the first drop which emerges from the glands to some object, and assists the natural pressure of the substance by moving its head hither and thither."

1. E.P. 283, 1855. His process consisted of reducing the young branches of the mulberry tree to a paste, bleaching and purifying it, finally transforming the paste into an explosive substance (probably nitrocellulose), dissolving this substance in a mixture of alcohol and ether, then adding an ethereal solution of india-rubber previously treated with ammonia, and transforming the viscous liquor so obtained into a thread. The thread was spun by means of a simple point of steel, which was dipped into the mixture and then drawn out. This point drew out a viscous thread which rapidly dried, and which he then wound on a bobbin.
2. Electrician, 1887, **18**, 287; E.P. 4458, 1882.
3. D.R.P. 161780; 1884; E.P. 3029, 1884.
4. Electrician, 1887, **18**, 256.
5. E.P. 16805, 1885; abst. J.S.C.I., 1886, **5**, 172.

rial Resembling Silk." His first patent[1] was taken out Nov. 17, 1884, and contained a description of the process of preparing nitrocellulose and squirting an ether-alcohol solution of it through minute apertures into the air. From this point the development of the four main branches of artificial filaments—nitrocellulose, cuprammonium cellulose, zinc chloride solutions and gelatin and similar materials, omitting viscose and cellulose acetate described separately —is perhaps more properly considered under their respective headings in a later portion of this chapter.

At first the idea appeared to be to produce an article as a direct competitor of natural silk, but with increased knowledge this is being gradually discarded. The lack of strength and wearing qualities of the artificial material have lessened liability to competition and replacement of the natural product, and instead has created channels of consumption of its own. In a great measure it has been the means of creating new uses for lustrous silk-like threads, e.g., for ladies' wear, trimmings, hats, and woven with silk and cotton in the production of mixed goods. Natural and artificial silk are more and more occupying distinctive fields, in which new industries are increasing for the use of the latter product. It is not exaggeration to say that the artificial-silk industry is creating an entirely new class of fabrics, which, except in a few cases, have not taken the place of natural silk at all. The general progress from the original highly inflammable films of Chardonnet to the denitrated and regenerated final cellulose filaments of the present time, and which resist the disintegrating action of water, have been achieved by very careful research and by distinct steps, as hereinafter enumerated.

The name "Artificial Silk" is rather a misnomer, for with the

1. F.P. 165349, 1884. For recent improvements in the manufacture of artificial silk see Wordle, Text. Ztg., 1892, 53. Ind. Text., 1892, 423; Hanausek, Chem. Zeit., 1894, **18**, 441; Silbermann, Mon. Text., 1894, **9**, 51; Herzog, Lehne's Farb. Ztg., 1894, **6**, 49; Truchot, Muster Ztg., 1897, **46**, 535. J. Pharm., 1897, **6**, 400; Mon. Teint., 1897, **41**, 214; Levy and Ernst, Lehnes Farb. Ztg., 1900, **11**, 135; Pfeiffer, Oest. Chem. Ztg., 1900, **3**, 57; Suvern and Herzog, Verh. V. Gew. Abh., 1903, 224; Zeit. ang. Chem., 1903, **16**, 600; Rev. mat. col., 1903, **7**, 269; Ind. Text., 1903, **19**, 69, 143; Text. Mfr., 1903, **29**, 209; Moss, Ibid., p. 147; 1904, **30**, 13; Witt, Verh. v. Gew. Sitz. B., 1904, 71; Lehnes Farb. Ztg., 1904, **15**, 222; Text. Mfr., 1904, **30**, 99; Farb. Ztg., 1904, **40**, 688; Bellet, Rev. ind., 1906., **37**, 428; P. Hoffmann, Ind. Text., 1906, **22**, 1581; Uhlands Trade Rep., 1906, **5**, 28; Text. Rec., 1906, **31**, 5, 96; Wederhake, "Silver Caoutchouc Silk," Pharm. Centralh., 1906, **47**, 862; W. Massot, Zeit. ang. Chem., 1907, **20**, 437; F. Beltzer, Mon. Sci., 1907, **68**, 181; C. Schwalbe, Zeit. ang. Chem., 1908, **21**, 2401; H. Silbermann, Rev. gén. mat. color., 1908, **11**, 186; A. Colin, Rev. gén. Chim., 1909, **12**, 40; J. Gilpin, Am. Chem., J., 1910, **43**, 469; H. de la Coux, Rev. gén. sci., 1910, **21**, 203. See also U. S. Daily Consular and Trade Reports, No. 3315, Apr. 20, 1908, p. 11; 3198, June 10, 1908, 16; 3350, Dec. 8, 1908, 7; 3431, Mar. 17, 1909, 10; 3488, May 22, 1909, 8; 3532, July, 15, 1909, 7; 3658, Dec. 11, 1909, 12.

exception of gelatin and casein silks, which have not reached any considerable degree of commercial success as yet, these artificial fibers differ from the natural in being of vegetable and not animal origin, as shown by their analysis and especially their behavior towards dyestuffs. Cross and Bevan have suggested the compatible name "Lustracellulose," J. Cain that of "Celvis," and O. Guttmann "Lustrose."[1] These names are intended to comprise artificial fibers as a class, irrespective of their composition. "Cellose," "Silkose," "Silkoid" and "Fibro-silk" have also been suggested. As in the expansion of any industry, all methods were not feasible and several companies were undoubtedly formed to work processes which had little chance of commercial prosperity.

A. Chaplet[2] has recently revived the subject of modern attempts to produce artificial tissues as entire pieces of fabrics without weaving. Millar, Drouinat, and others have attempted to produce such cloths directly, but as yet with but little commercial success.

Nitrocellulose Silks at the present time are easily the most important, both from the amount produced in comparison with the other methods and from the fact that it was the first filament prepared commercially in large amounts. The Chardonnet methods, with their modern refinements, are the most largely worked, the systems of Lehner and Du Vivier probably coming next in importance in the order named. Methods of solvent recovery admitting of a high percentage of solvent regenerated and which were apparently first perfected in 1909 and 1910, will undoubtedly exercise great influence in the expansion of the production of filaments with a cellulose nitrate base. The luster may be increased according to A. Palmer[3] by strongly compressing the moistened material at a high temperature, by passing it between heated cylinders at a speed sufficiently great to leave the material still wet after treatment.

As a class, the nitrocellulose silks dissolve in concentrated sulphuric acid and also in chromic acid; cold concentrated hydrochloric acid is without effect, but on applying heat the silk is speedily destroyed; with concentrated acetic acid the fiber rapidly swells up, as also in concentrated caustic alkalies and Schweitzer's reagent, but is not dissolved.

Iodine and sulphuric acid colors the silk a blue; Vetillard's reagent a red which becomes blue on washing; and chloriodide of zinc a violet blue. Millon's reagent readily dissolves collodion silk even in a cold solution.

1. J.S.C.I., 1909, **28**, 1302.
2. Rev. gén. mat. color., 1909, **14**, 14.
3. F.P. 408303, 1909.

Chardonnet Silk ("Besançon Silk," "Près de Vaux Silk," "Tubize Silk," "Nitro Silk," "Frankfurt Artificial Silk"). Although his first patent was taken out in 1884[1] little commercial progress was made until after the Paris Exhibition of 1889, where, notwithstanding the high inflammability of the product, the samples exhibited received a Grand Prix and excited much curiosity and admiration.[2] Chardonnet not only worked out methods of preparing acceptable cellulose nitrates for artificial filaments, but evolved and perfected the engineering detail connected with the mechanics of spinning and twisting the filament, and laid the foundation in a mechanical way for all those who have followed. He put into execution methods of transferring a liquid into a marketable thread in considerable quantities, and in this was distinctly a pioneer. The first experimental plant was located at Spreitenbach, Switzerland, but in 1893, due to interesting certain French capitalists, the experimental plant was removed to Besançon, France, where a long, tedious series of experiments on a commercial scale were carried on, which are reflected in the patents periodically issued, and which culminated in success. After the expenditure of vast sums of money in surmounting the obstacles—mostly mechanical—the plant became a noticeable commercial factor in 1899. From this time onward, progress was rapid and assured.[3] The original plant at Besançon started with an output of 50 k. a day in 1891; it had reached 1,500 k. in 1904, and 1,800 to 2,000 k. in 1907, and seems to remain at that figure in 1910.

1. F.P. 165349, 1884; the other Chardonnet patents are F.P. 172207, 1885; 199194, 201740, 1889; 203202, 207624, 208405, 1890; 216156, 216564, 1891; 221488, 225567, 1892; 231230, 1893; various renewals of the foregoing; E.P. 6045, 1885; 2210, 2211, 1886; 5270, 1888; 1656, 5376, 1890; 19560, 24638, 1891; 24638, 1893; D.R.P. 38368, 1885; 46125, 1888; 56331, 56655, 1890; 64031, 1891; 81599, 1893; U.S.P. 394559, 1888; 410401, 1889; 455245, 460629, 1891; 531158, 1894; Swiss P. 1958; 2123; 3667, 1891; 4412; 10506. It.P. 17844, 265, 1885; and First Addition thereto dated Jan. 5, 1887; Span.P. 7849, 1885; and Certificate of Addition thereto dated Jan. 20, 1886; Belg.P. 68890, 1885; Aust.-Hung.P. 31310, 1885. See also Chardonnet, C.R., 1887, **105**, 898; 1889, **108**, 962; see Pasqualis, It.P. 22846, 31932, 1892.

2. The first apparatus actually used by Chardonnet is shown in a photograph in "Fabrication de la soie artificielle parisienne," published by T. Foltzer in 1903. It is quite fitting that France, which has the silkworm industry so firmly established in the southern section, should foster and develop this artificial product. It has been stated that the instrumentality of L. Pasteur in saving the silkworm from threatened extinction by his bacteriological researches at a previous period, may have intensified the confidence of the French people in supporting this project through experimental vicissitudes to satisfactory commercial realization.

3. As an example of the peculiar difficulties encountered in attaining commercial success may be mentioned the failure of the English company, due, it was then said, to local atmospheric conditions, the actual solution prepared in France refusing to spin at the English (Coventry) factory. In the U. S., labor and tariff conditions were the two factors which deterred the French company from starting an American branch.

In the original Chardonnet process the liquid pyroxylin compound used to produce the weavable threads consisted of pyroxylin and a mixture of equal volumes of ether and alcohol.[1] The former was prepared by taking 100 gm. pyroxylin, 10–20 gm. of a metallic protochloride reducer (iron, chromium, manganese or tin) and 0.2. gm. of an oxidizable base such as quinine, aniline or rosaniline. For some mixtures 40% ether and 60% alcohol was found to yield the most satisfactory results. In order to prepare the liquid in the best condition, it was found preferable to dissolve the pyroxylin in the largest portion of the alcohol and ether, and in the rest of the solvent to dissolve the chloride, organic base and coloring matter (if any), the two solutions being subsequently mixed.[2] The nature of the pyroxylin

1. H. Wyss, Leip. Farb. Ztg., 1898, (9), **47**, 399; Pap. Ztg., 1898, **23**, 3824, 3863; J.S.C.I. 1887, **6**, 139; 1888, **7**, 206; 1889, **8**, 539, 611; 1890, **9**, 286; 1891, **10**, 359; 1895, **14**, 267; 1898, **17**, 918. See Moyat, Mon. Teint., 1892, **36**, 50.

2. Where the pyroxylin was dehydrated by pressing rather than by the first method of drying until no further amount of moisture was removed, the pressed cake containing on the average 36% water, was introduced without further drying into horizontal slowly-revolving, tin-lined, cylindrical iron drums, and there treated with the solvent in the proportion of 100 l. combined ether-alcohol to 22 k. nitrocellulose calculated on the dried product. The alcohol used being 95%, and estimating on a 36% moisture content in the pyroxylin, would give the spinning mixture an equivalent of about 7% water. This amount of water would increase the viscosity of the solution greatly, and was one factor contributing to the employment of high pressure to force the fluid through the orifices. The mixture of pyroxylin, alcohol and ether is slowly agitated for fifteen to twenty hours and then forced under a pressure of 30 to 60 atmospheres through a layer of carded cotton in specially constructed filter presses. This consists of a cylindrical vessel of about 100 l. capacity, the filtering material being placed on the bottom, and consisting of a layer of absorbent cotton 10 to 15 mm. diameter, and inclosed between two sheets of fine silk, which in turn are encompassed by two sheets of tinned wire gauze of 100–120 mesh. The pressure required is governed by the speed of filtration desired, the pressure being increased as the filter clogs in order that the volume filtered in a given time will be uniform, irrespective of the state of the filter. From these it passes direct into the storage tanks, which are of about 5,000 l. capacity, and in which it is allowed to "age" for what reason the author is not aware. It would appear to be more rational to allow the "ageing" process to take place before filtration, for upon standing the small insoluble particles tend to agglutinate together and a solution left to rest some time filters more readily, and clarifies more completely than a pyroxylin which has more recently been brought into solution. All the metallic parts of machinery, pipes, and tanks with which the pyroxylin solution comes in contact are tinned, and great care is taken throughout to avoid leakage of ether vapor. According to the Soc. Anon. pour la Fab. de la Soie de Chardonnet (F.P. 354398, 1905), the filters consist of cotton wool wrapped in muslin, and rapidly become impregnated with pyroxylin, owing to the evaporation of the solvent, and have to be renewed. Filtration is thus a burdensome operation, as the cotton wool and muslin are expensive, and the old caked filters have hitherto been burnt as a useless and possibly dangerous by-product. The process described is for the recovery of the cotton wool and muslin by treatment of these "filter cakes." Any solvent for pyroxylin or denitrating agent may be employed, but the best results are obtained by treatment at 70–90° with a 0.5% solution of sodium or potassium carbonate, or a 2–5% solution of an alkali sulphide. In this way the pyroxylin is dissolved, and may be removed with ease by a single washing with water. The cotton wool is left unaltered, and after being dried, and if necessary recombed, may be directly used again for filtering; or it may be nitrated. The dark-brown solution of the pyroxylin is evaporated, and the residue

used and the elasticity and strength one desires to realize in the threads produced from the fluid, will necessitate some variations from the general formula given above. The viscous liquid after filtration is drawn into threads by forcing through an orifice of about 0.5 mm. diameter in such a manner that the minute fluid stream, as it emerges from the spinneret, enters into a cold liquid such as water, which immediately coagulates and solidifies its exterior. The filament then presents the form of a tube or sheath, solid on its exterior and inclosing a central column of liquid which has not yet solidified. This filament, on account of its liquid interior, may be drawn or spun out into a fraction of its original size, provided the drawing operation is conducted before the interior of the filament congeals. After attenuation, it becomes solidified through its entire substance, this solidifica-

is calcined and converted into cellulose. The net cost of the process is stated to be insignificant, the plant rudimentary, and the labor practically *nil*. The operation may be carried out in any ordinary bleaching kier, and a particular form of the latter is described. From the storage tanks the pyroxylin solution is led in pipes still under pressure to the spinning room (see Fig. 120), where it is dis-

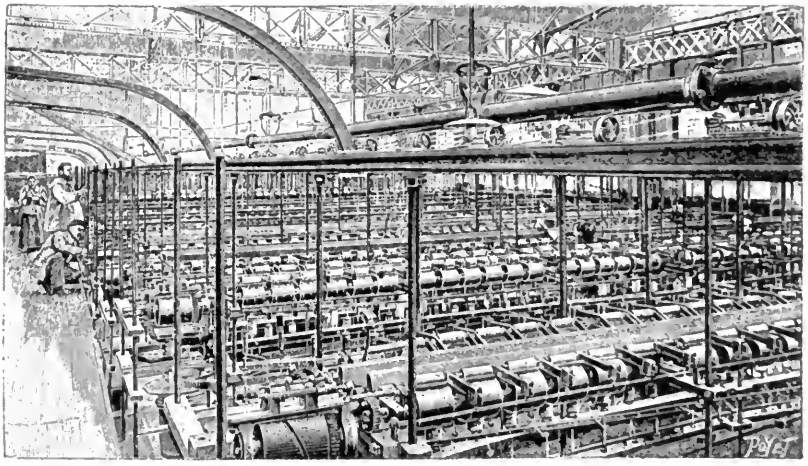

FIG. 120.—Conversion of Collodion into Artificial Silk (From Sci. Am. Suppl. No. 1156, p. 18470).

tributed in smaller tubes running along the spinning frames. These small tubes are provided with a number of reservoirs each of which ends in the small glass jets above mentioned. Where the nitrocellulose thread passes at once into a liquid coagulating media, as water, the process is spoken of as "wet spinning," whereas in the later processes, in which water is added directly to the spinning solution by means of incompletely dehydrated pyroxylin being used, the formed thread is coagulated in the air, this being known as "dry spinning." In order to form a thread, three or four of the original filaments are spun together, the further treatment of the product being analogous to that of natural silk, with the exception of the denitration process, applied before weaving.

tion being hastened by causing a circulation of warm air through an inclosed chamber in which the filaments are reeled. As the Chardonnet apparatus is the standard upon which subsequent modifications have been based, it is given in detail in the note below.[1] In

1. The apparatus is shown in Fig. 121, and in which appears a transverse section of the apparatus. Fig. 122 is a front elevation of a portion of the apparatus, the box or casing of the spinning apparatus being in vertical section. Fig. 123 is an enlarged fragmentary section answering to Fig. 121, and showing the spinning devices. Fig. 124 is a fragmentary front elevation of the parts shown in Fig. 123;

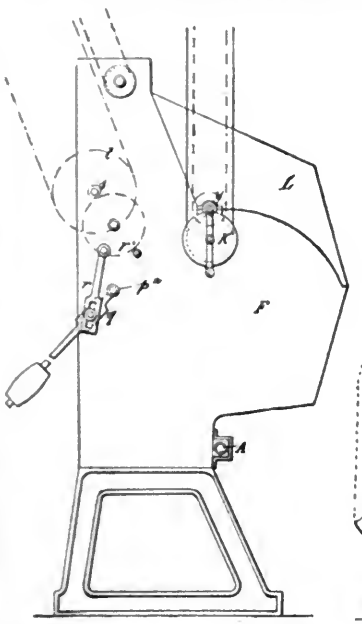

FIG. 121.—De Chardonnet Apparatus for Making Artificial Silk. (Transverse Section).

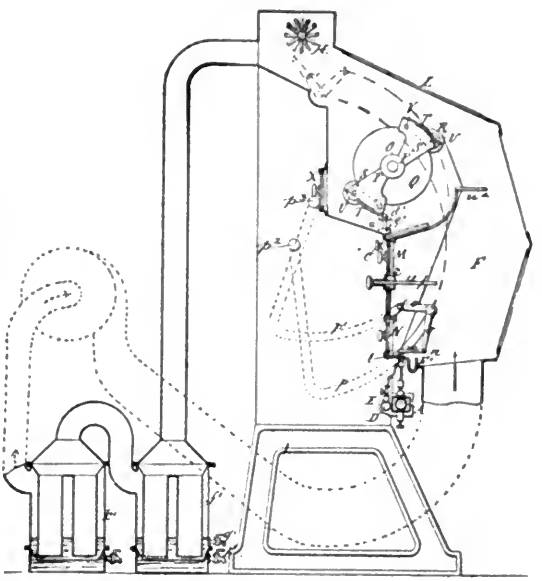

FIG. 122.—De Chardonnet Apparatus for Making Artificial Silk (Front Elevation).

a plan of the nippers *rr*, shown in Fig. 123 on the same enlarged scale, and a fragmentary plan view of the clamp *h* shown in Figs. 123 and 124. Fig. 125 is a side elevation of the apparatus.

The collodion solution, having been well filtered, is placed in a closed vessel or receptacle, *A'*. (Shown in Fig. 125.) This vessel is lined or coated interiorly with tin, and from it leads a pipe, *A*, which passes down toward the lower part of the machine and enters horizontally into the same, as shown in Fig. 122. This pipe is provided with a valve or stopcock, *B*, to regulate the flow. The closed vessel or reservoir is furnished with an air pump (not shown) which maintains in it a pressure of from two to three atmospheres, in order that the collodion liquid may be expelled with sufficient force to effect the spinning of the filaments. The pipe *A* extends through the entire length of the machine, wherein it is inclosed or partly surrounded by a water jacket, *C*, in the manner best shown in Figs. 121 and 123. In this water jacket, the walls of which are of thin metal, cold water is caused to circulate. The pipe *A* carries all the vertical spinners or nozzles through which the liquid is forced out to form the filaments. These spinners or nozzles *H* are arranged in a row equidistantly along the top of the pipe *A*. Each spinner

general, the method may be described as capillary spinning organs

is made up of several parts, as best shown in Fig. 123. On the top of the pipe *A* is a thickened boss, *b*, in which is formed a threaded hole, and into this is screwed a socket, *c*, in which is fixed a vertical tube, *d*, a thin packing, *e*, of rubber, vulcanized or not, being interposed around the tube *d* to make a tight joint.

To the upper end of the tube *d* is connected a flexible tube, *f*, of soft india-rubber or other impermeable material which cannot be attacked by the solution, and to the upper end of this flexible tube is connected a tube, *i*, of glass or other suitable material, the upper end of which is reduced to form a contracted nozzle or nipple. Around this nozzle is arranged a glass tube, *j*, which is held by a clamp, *k*, attached rigidly to a vertical slide *o*. This slide *o* extends downwardly and passes out beneath the inclosing case of the apparatus, and its lower portion, which is toothed,

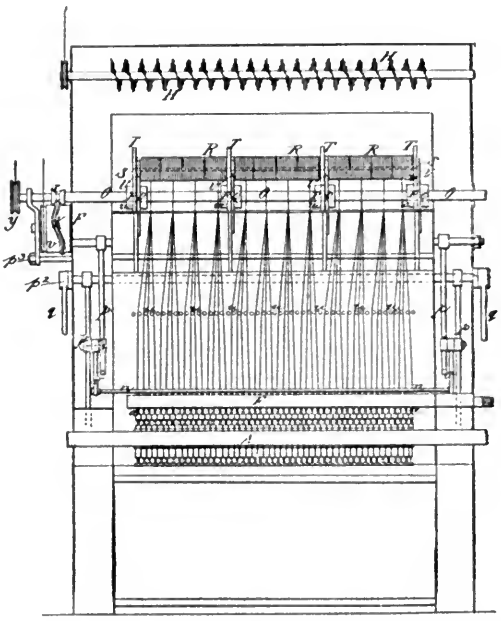

FIG. 123.—De Chardonnet Apparatus for Making Artificial Silk, Showing the Spinning Devices.

is engaged by a pinion, *p*, which is turned by a knob, *q*, at the front of the apparatus. By turning this knob the slide *o*, clamp *k*, and surrounding tube *j* are raised or lowered, while the nozzle tube *i* remains at the same height. Cold water enters by a tube, *l'*, Fig. 121, and is conducted by a flexible rubber tube, *l*, and the lateral branch *j'* into the interior of the tube *j* and around the nozzle tube *i*. The water that thus flows in ascends around the nozzle tube, runs over the top of the tube *j*, and runs down, being finally caught in a trough or gutter, *D*, Fig. 121. The flow of water is controlled by means of a screw clamp, *m*, which pinches more or less the rubber tube *l*, and thus reduces the size of the stream that passes through it. The clamp *m* is operated from the outside by means of a knob, *n*, at the front of the apparatus. In like manner the flow of the collodion liquid through the flexible tube *f* is regulated by the clamp *h*, which is adjusted by a screw, *g*, which extends out to the front of the machine, and is provided with a knob, *n'*. Fig. 124 illustrates this clamp in detail. Its construction is identical with the clamp *m*. Ordinarily the inclosing tube *j* extends higher than the nozzle tube *i*, as shown in Fig. 123, so that the collodion liquid on being forced out through the nozzle enters a body

surrounded by a water-filled tube, the working orifice of each spinning

of cold water held in the tube *j*, and is caused to pass through this water until it reaches the level of the top of the tube *j*; but when the machine is not in use it is desirable to close the nozzle, and it is also desirable that there shall be no water above it which might enter it. For this purpose the slide *o* is lowered by turning the knob *q*, thereby lowering the tube *j* until the level of the water therein is beneath the orifice of the nozzle. The same movement acts, by means of a link, *r*, to draw down an arm, *s*, pivoted at *s'*, the extremity of which carries a stopper or pad, *t*, which on being thus lowered closes said orifice in the nozzle and prevents the solidification of the solution in the capillary tube by the action of the surrounding air or by the water. The flow of water is shut off at the same time by turning the knob *n*.

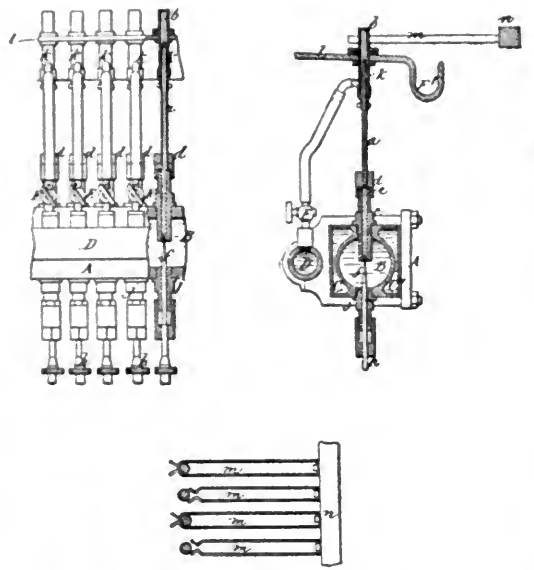

FIG. 124.—The de Chardonnet Apparatus for Making Artificial silk.

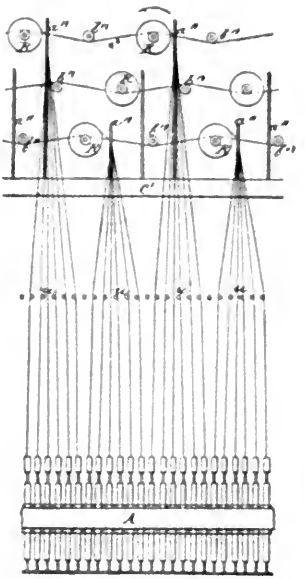

FIG. 125.—De Chardonnet Spinning Devices (Side Elevation).

In the operation of the machine the minute stream of collodion liquid on emerging from the nozzle is carried up through the tube *j* by the ascending stream of water, being solidified at the same time, and its end hangs or falls over the outside of the tube *j*. The loose end of the filament thus formed must then be grasped and carried to the reel in order that the spinning operation may commence. To accomplish this result the following mechanism is provided: The reel (shown at *K* in Figs. 121 and 122) is arranged in the upper part of the apparatus, with its winding-on side over the row of spinners or nozzles *H*. A long bar, *D'*, extends longitudinally in front of and a little above the row of nozzles and is fixed at each end to an elbow-lever, *E*. This bar *D'* carries a series of nippers or grasping fingers, *v*, one to each nozzle. These nippers are best shown in Figs. 123 and 124. Each nipper is formed of two elastic springs curved as shown in side view in Fig. 123 and in plan in Fig. 124, and adapted to embrace the inclosing tube *j* of the nozzle. Both of the springs are fastened to the bar *D'* by one screw. The end portions of the springs are coated with soft india-rubber, not vulcanized. In Fig. 123 the nippers *v* are shown as engaging the tube *j*. If the bar *D'* were to be moved to the left in this figure, the springs would yield and the nippers would free themselves from

organ being surrounded by a pair of tweezers which transfer the fila-

the tube, at the same time engaging the overhanging end of the collodion filament. The bar D' is given such a movement that the nippers d travel first to the left and then, having freed themselves from the tube j and grasped the filament, sweep upwardly and over the top of the reel K in the path indicated by the dotted line xx in Fig. 121, thereby carrying the end of the filament up over the reel and enabling the reel to engage the filament and continue thereafter to draw it out. The speed of movement of the bar D' in its ascent and the speed of rotation of the reel K are so proportioned to the rate of discharge of the collodion from the nozzle that they act to draw out the filament to the proper degree of attenuation. In order to free the nippers from the filament after they have carried it over the reel, there is provided a revolving brush, J, the bristles of which encounter the nippers when the bar D' reaches its extreme upper position. By this means the nippers are cleaned. The bar D' is moved up and back two or three times per minute. At the completion of its downward movement its nippers vv spring over and embrace the glass tubes jj. During the upward movement of the bar its nippers carry the

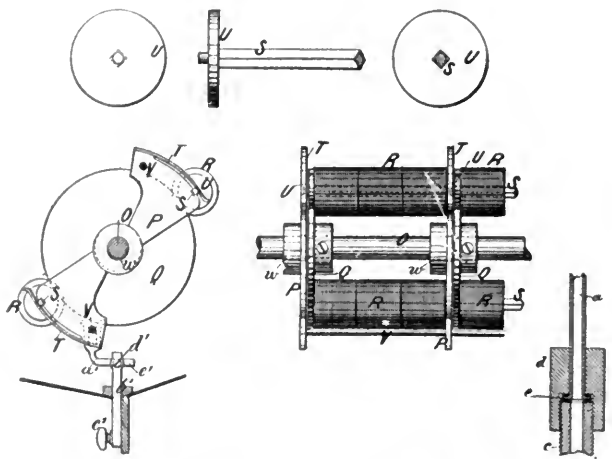

FIG. 126.—De Chardonnet Apparatus for Making Artificial Silk.

filament between horizontal guide pins, xx, which are arranged in a series corresponding to the number of nozzles, and the function of which is to separate the filaments emerging from the respective nozzles. Above the guide pins xx there is arranged a series of inclined guide pins, yy, as shown in Fig. 121, which are arranged in pairs, with the two pins of a pair converging, as shown in Fig. 122. The effect of this arrangement is that as the nippers carry the filaments up, the latter are first caught between the pins xx and thereby held distinct and parallel and the group of three filaments enters between the extremities of one pair of pins yy, and in being drawn down to the parallel portion, the three filaments are united to form one thread, which is then wound upon the reel.

The peculiar movement of the bar D' is imparted to it by a special combination of levers. At the commencement of the operation of the machine a filament will be forced out of reach of the nozzles H, of which there may be any number, and will flow over the top of the tube j of each nozzle. At the first movement of the bar D', carrying the nippers, the filaments will be grasped by the nippers and elevated over the reel, and will then be engaged by the reel, after which they will be drawn or spun out without interruption. At the second movement of the bar D' the nippers will engage any filaments that may have been missed at the first movement, and will add them to the reel. Thereafter, although the movement of the bar D' continues, it is without effect so long as no interruption

ments to bobbins from which they are reeled off for the subsequent

occurs in the spinning of the filaments; but whenever a filament breaks the nippers r, which engage the nozzle corresponding to that filament, will grasp the overhanging end of the severed filament and carry it up over the reel again, whereupon the interrupted filament is reunited by adhesion with the others of its group. At each ascending movement of the bar D' the nippers are cleaned by the brush J.

In order that the successive turns of the thread on the reel shall not be wound upon themselves they cross angularly from side to side, thereby facilitating the drying of the threads. This is accomplished by imparting to the reel, in addition to its rotary movement, a longitudinal reciprocatory movement by means of the device shown in Fig. 122. A pulley, L, driven at suitable speed, carries a crank, which is connected to a pitman, N, which in turn is coupled to an oiler box, O. This box is mounted on the shaft P of the reel, being confined thereon between collars zz, so that the shaft is free to turn within the box; but as the box is moved endwise the shaft is carried with it. The shaft P may be rotated by a belt passing over a pulley, P', or by any other means. The pulley P' is connected with the

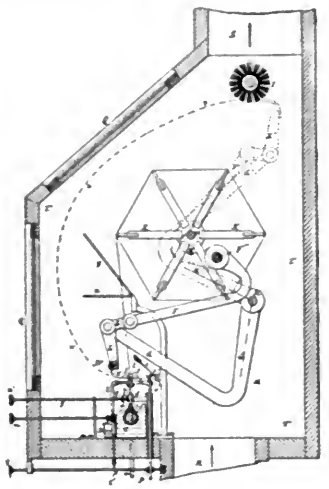

FIG. 127.—Improved Chardonnet Process for Artificial Silk Manufacture.

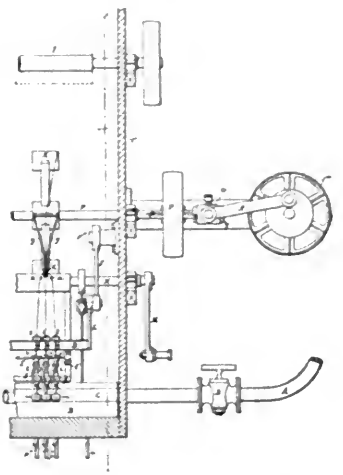

FIG. 128.—Improved Chardonnet Process for Artificial Silk Manufacture.

shaft by a key and groove, so that the shaft can slide freely and still be rotated by the pulley. The pulley is prevented from sliding with the shaft by means of fingers which embrace its rim, the fingers being supported by the bracket which supports the pulley L. (See Figs. 122 and 125.)

The entire apparatus, with the exception of the regulating knobs, is inclosed in a suitable tight box or casing, T, provided with glazed openings QQ, through which the operator may look in order to observe the operation of the machine. These may be opened in order to regulate or clean the apparatus. A current of air is caused to circulate through the box, T, entering at R and passing out at S. For this purpose a fan or blower, S', Fig. 125, may be provided. This air, which which should be heated to about 30° C., serves to dry the threads and carries away with it the spirituous and aqueous vapors which are evaporated within the casing. These vapors are subsequently recovered by passing the air through water or through a refrigerating machine. The air is then reheated and reintroduced at R. It thus circulates continuously. The alcohol and ether are separated from the water by rectification, or by fractional distillation, and serve, without being separated from each other, for dissolving the pyroxylin for forming the collodion solution.

treatments. The object of the introduction of metallic chlorides

The improved Chardonnet process is shown in Figs. 127 to 130 inclusive, in which the collodion solution, well filtered, is introduced into a closed vessel (not shown in the drawings) in which an air pump maintains a pressure of from six to twelve atmospheres. This vessel, suitably lined inside, communicates through a stop-cock with the pipe *A*, which carries the spinning dies, and extends the whole length of the machine, being arranged underneath the casing *F*, which incloses the spinning and reeling mechanism. The pipe *A*, as shown in detail to an enlarged scale by Fig. 129, has three internal compartments, the central one *B*, which holds the solution and forms a conduit for conducting it to the spinning dies, and the two side compartments, *C* and *C'*, for circulating water around the central tube *B*. Each spinning die consists of a tube *a*, on which is soldered a capillary tube *b*. The lower end of tube *a* communicates with the sleeve *c* screwed into the pipe *A*, the mouth of which sleeve opens into the conduit *B*. A screw union *d* holds the die tube to the sleeve, making a tight joint by two washers of leather or the like, pressing between them the lip *e* at the lower end of the tube *a*, as best shown in Fig. 130, and constituting thus a detachable coupling for uniting the die *a* to the

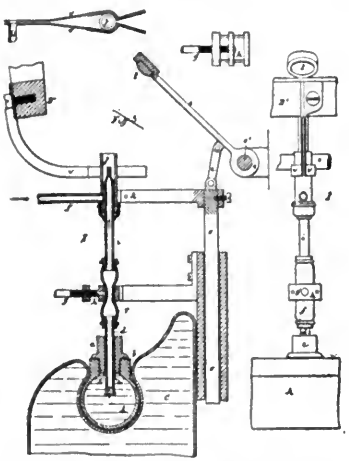

FIG. 129.—Improved Chardonnet Process for Artificial Silk Manufacture.

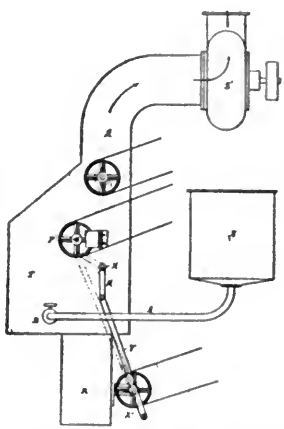

FIG. 130.—Improved Chardonnet Process for Artificial Silk Manufacture.

supply tube or sleeve *c*. The outflow of the liquid from the conduit *B* into each of the die tubes is regulated by the conical end *f* of a screw pin or rod *h*, which enters the lower end of the sleeve *c*, and by means of an adjusting head beneath can be screwed more or less through the stuffing-box *j* on the under side of the pipe *A*, so as to diminish or increase the area of the passage through which the liquid flows into the die tube. The valves thus constructed enable the flow to the separate dies to be regulated with great nicety, and in connection with the detachable couplings provide for the shutting off of the flow from any die that may become clogged, and its removal and replacement without interfering with the spinning from the remaining dies. These valves are made of metal or other material not acted on by liquid, and their adjusting heads project beneath the casing *F*, where they are readily accessible and within easy reach of the operator. Around the upper part of each die tube is a casing *k*, supported by the fixed plate *l*, which extends along the machine. The casing *k* supplies cold water at the end of the die tube, this water being supplied from a pipe *D*, which has a branch with stop-cock *E* to each of the casings *k*. These stop-cocks, which are made of metal, regulate the flow of cold water in which the filament is submerged as it issues from the die tube *a*, instead of regulating this flow by the compression of a rubber tube, as formerly. The overflow water runs into a gutter *F'*.

and alkaloids was to reduce the inflammability,[1] but this having been found ineffective, later gave way to denitration of the nitrocellulose.[2] In a subsequent process, the diameter of the spinnerets (glass tubes called "silk worms") is reduced to about 0.08 mm., this necessitating increase of pressure to 50–60 atmospheres in order to force the solution (containing from 10–20% cellulose nitrate) through the spinning orifices at the desired rate of flow. Whereas at first a pyroxylin dried until no further loss of weight occurs was taken to prepare the fluid used in spinning, it was subsequently found that this solution was so high in solvent as to be difficult to dry without contortion of the fiber. The pyroxylin, therefore, instead of being dried—which was a source of considerable danger—was dehydrated by pressure and used while still containing from 30–40% of water. As the result of the additional water left in the pyroxylin, it was found that exposure of the formed filaments to air at a temperature of about 50° was sufficient to eliminate the solvent from the filament, and this obviated the necessity of washing in water, which often caused the thread to become opaque and decrease in tensile strength.[3]

1. U.S.P. 410404, 1889; F.P. 188304, 1888; E.P. 5270, 1888. The spinning apparatus was originally so arranged that the emerging threads were plunged into water containing 0.5% nitric acid, but this acid wash was soon found to be superfluous. Usually 500 m. is the length wound on each reel, the thread being then taken off and brought together to a skein. Definite knowledge is lacking as to the amount of solvent evaporated per unit weight of silk obtained in this process. E. A. Mangin, representing the Chardonnet Artificial Silk Co. in America, at the hearings before the Committee on Ways and Means of the U. S. House of Representatives, 59th Congress, First Session, Feb.–Mar., 1906, p. 68, testified that the French company used ethyl alcohol denatured with ether, having found it impossible to employ wood alcohol; paid 40–45 cents per gallon for the alcohol; could produce Chardonnet silk in the United States with denatured alcohol for $1.25–1.50 per pound; that 1–1.5 gal. alcohol are used per lb. of finished "silk" manufactured. This amount appears excessive if the pyroxylin produced is of low viscosity, as undoubtedly the nitrating process would be adjusted to produce a very fluid pyroxylin from the economical point of reducing to the minimum the amount of solvent required.

2. Chardonnet's method of denitration (U.S.P. 410404, 1889; F.P. 188304, 1888) is to maintain the pyroxylin at 30°–35° in a bath of nitric acid of density of about 1.32, the complete transformation being recognized either by analysis, solubility test or by observing the commencement of softening of the pyroxylin fibers. See U. S. Consul's Report No. 150, Mar., 1893, p. 402; abst. J.S.C.I., 1893, **12**, 516.

3. After spinning, the filament still contains a small amount of alcohol and water, being entirely dried by hanging in the form of hanks in a closed chamber and exposing to a powerful current of air heated to 45°–50°. Of the finer qualities of the fiber, 220,000 m. weigh but 1 k. Hörk and Druge obtain more uniform results by the use of a less aqueous pyroxylin than described by Chardonnet. Turgard (F.P. 344845, 1904) dissolves 100 gm. pyroxylin in a mixture of 2,400 cc. alcohol 90–95% strength and 600 cc. glacial acetic acid. After the pyroxylin has been dissolved there is added 5 gm. castor oil and 3 gm. albumin, when the mixture is ready to be formed into filaments.

According to C.R., 1889, **108**, 961, the sulphited pulp of young wood is used as the source of cellulose, being first disintegrated in a carding machine in order to form a light and very bulky fleece, similar in appearance to cotton waste. After

The artificial silk manufactured by the Chardonnet factories after proper bleaching and drying under tension is at least as white as natural silk, and has been claimed as even whiter, when both are compared in a Lovibond tintometer, or an F. Ives colorimeter. It possesses in a smaller degree the characteristic crackling rustle of natural mulberry silk, but feels somewhat firmer than this. According to the statements of the inventor, its density is equal to 1.49, while that of Grege silk is 1.66, and of boiled mulberry silk 1.43. According to Herzog[1] the sp.gr. is about 13% greater than natural silk. Chardonnet gives its strength of flexure as 25-35 k. per sq. mm., about 20% less than boiled silk. The elasticity is about that of natural silk, the extension of the threads amounts to 15–20% and the real elasticity to 4–5%. Herzog makes the following comparison of the

drying at 140–160°, the hot mass is immersed in the nitrating acid in earthenware vessels. Comparative experiments have shown that nitrocellulose prepared from wood pulp, while it gives a more fluid solution when dissolved in alcohol and ether, the product obtained after spinning has an inferior tensile strength and is stated to lack the luster and purity of color of the filaments produced from cotton as the source of cellulose. It is claimed (E. Opfermann, E. Friedemann and Act.-Ges. für Maschinenpapierfabrikation, F.P. 402462, 1909; E.P. 10604, 1909; D.R.P. 219085, 1909; abst. J.S.C.I., 1909, **28**, 1270) that the impurities in wood pulp which limit its application in the manufacture of artificial filaments and nitrocellulose may be extracted by boiling the cellulose pulp under pressure with a solution of sodium carbonate at a concentration of 0.5–2%, with the addition, if the case seems to demand it, of small proportions of alkali hydroxide or sulphide. Or else the pulp may be boiled with a solution containing 10 gm. of calcium oxide per l. By this treatment incrustations, wood gums, and resin are dissolved and at the same time, in the subsequent bleaching, a saving of about 50% of the bleaching agent is realized. According to the property of the fiber employed the concentration of the alkali lye is about ½–2%, heating for about three to six hours at a pressure of about 2–3 atmospheres. A small addition of caustic alkali or alkali sulphide increases the softness of the product without weakening it.

The manufacture of the glass spinneret tubes, the orifice of which is invisible to the naked eye, is exceedingly delicate work. The uniformity of the threads issuing from them is of course dependent upon the exactness with which the apertures approximate the same diameter. Glass tubes are heated to redness and quickly pulled out, it being impossible to pull a glass tube out so fine that it will not have a hollow interior. The glass is cut off as near to the required diameter as possible with the unaided eye and experience, but are afterwards standardized by measurements under the microscope with a micrometer, and only those tubes accepted which vary within an established limit from the diameter sought, those of wider or narrower apertures being rejected, although the narrow aperture tubes may be made to the desired larger internal diameter by carefully removing the end by grinding on a fine stone. In those processes in which the spinnerets are microscopic holes in platinum sheets, they are said to be cut by very fine dies. It is evident that it must be exceedingly difficult to produce with exactness an invisible orifice.

The statement is made that in 1907 2,500,000 l. of alcohol were consumed in the Besançon works, so that each k. required between 4–5 l. of alcohol in its manufacture. A k. of 100 denier thread of this silk contains 90,000 m. in length, or nearly 2,000,000 m. of single filament as squirted from the jets. The selling price of this product has been given as 30 fr. per k. in 1896, 26.50 fr. in 1897, and 21.75 fr. in 1898; in 1903 it reached the price of 40 fr. per k., and it may be taken at 20 fr. in 1910.

1. Lehne's Farb. Ztg. 1894–5, p. 49.

firmness of Chardonnet silk: 60 denier titer, 69 gm. strength; extension, 155 mm. to 1 m.; 65 denier titer, 83 gm. strength; extension 171 mm. to 1 m. A boiled Minchew woof —one of the cheapest natural silks—gave 214 gm. strength and 189 mm. to 1 m. extension. According to Silbermann[1] the following figures represent equal titer: Real silk 38, Tussah 48, Chardonnet 17. Chardonnet gives the thickness of a single thread as 12–20 μ. Blanc states the thickness varies from 20–45 μ, and Silbermann has noticed threads of 52–60 μ in diameter. This variation in observations is explicable in the varying thickness of the individual filaments, due to the tension exerted after forcing the fluid out of the spinnerets and before coagulation has taken place. In Chardonnet silk the single filaments are united to a thread of desired size by torsion only, and without the aid of a cementing agent. Nitrocellulose silks, like cellulose nitrate, become electrical when rubbed.

F. Lehner's Artificial Silk[2] differs in many essential particulars from that produced by the previously described Chardonnet process. Whereas Chardonnet used viscous solutions and pressures as high as 60 k. per cm. and with concentrations as high as 20% pyroxylin, Lehner works with 10% solutions and reduces the pressure materially by means of the addition of small amounts of mineral acids as sulphuric, whereby the viscosity of the solution is greatly diminished,[3] this being attributed to molecular change.[4] In one modification of the Lehner process, there is taken silk waste of all kinds, including the flake waste products formed in the process of spinning floss silk. These remnants and wastes are thoroughly cleansed and digested for twenty-four hours with a concentrated solution of caustic potash or soda, or cuprammonium oxide, the silk substance being dissolved. The solution thus obtained is filtered, diluted with water, neutralized with an acid which slowly precipitates out the silk substance (a mixture of fibroin and sericin) in the form of fine threads of a pale reddish color. The precipitate thus obtained is well washed with cold water, the latter removed and the solid dissolved in concentrated acetic acid in the proportion of 1 to 5, this constituting

1. "Die Siede," 1897, **2**, 143.

2. For statement on Lehner Silk see U. S. Consular Report, Dec., 1894, 538; abst. J.S.C.I., 1895, **14**, 83, 405. Chem. Zeit., 1906, **30**, 579; Zeit. ang. Chem., 1906, **19**, 1581; Wollen. Z., 1892, **24**, 707; C. Bl. Text. Ind., 1894, **25**, 393; Mon. Text. Ind., 1892, **7**, 101. Although Lehner demonstrated his process in London, it was in Switzerland that he built up the business associated with his name.

3. U.S.P. 559392, 1896; D.R.P. 55949, 1889; 58508, 1890; E.P. 11831, 1891; It.P. 27943, 1890; Aust.-Hung.P. 54062 and 9475, 1891; Swiss P. 3740, 1891 See Koechlin, Soc. Ind. de Mulhouse Sitzungs, 1889, pp. viii+22; abst. J.S.C.I., 1889, **8**, 641.

4. Chardonnet, F.P. 231230, 1893.

"solution A." The second solution or *B*, is obtained by macerating for fifteen minutes cellulose, silk-paper, cotton or spinning wastes in an ammoniacal copper solution, the solution being expressed, and the washed residue nitrated in the usual way. The nitrocellulose so obtained is now dissolved in a mixture of methyl alcohol or ether and ethyl sulphuric acid, preferably in the proportion of 3 parts of the former to 1 of the latter.[1] The nitrocellulose is dissolved in this mixture of wood alcohol or ether and ethyl sulphuric acid in the proportion of 8 parts of the former to 100 of the latter, and maintained at 30° for one hour. A denitration of the dissolved nitrocellulose takes place under these conditions, nitroethane being evolved and escaping. Solutions *A* and *B* are then united in such a way that 5 parts of nitrocellulose are combined with 1 of silk fibroin, from which mixture the artificial silk filament is formed by allowing the

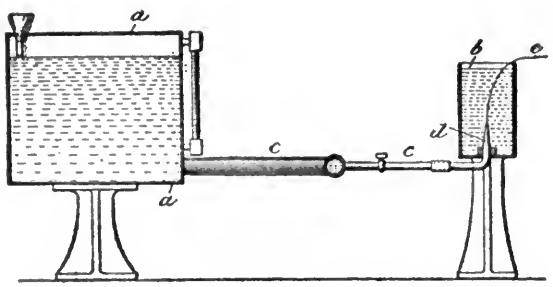

FIG. 131.—The Lehner Process of Making Artificial Silk.

mixture to pass through a small opening into a coagulating medium, preferably oil of turpentine, benzine, benzene, and other liquids free from oxygen.

The apparatus for carrying out this process is shown in Fig. 131, in which *a* represents the tank for containing the mixture of the solutions *A* and *B*. *b* represents the vessel containing the congealing or solidifying liquid. A pipe *c*, provided with a suitable cock or other regulating device, communicates with the tank *a*, and is provided with an outlet or small orifice *d* at or near the bottom of the vessel *b*, through which the liquid mixture from *a* passes into the liquid contained in the vessel *b*, below the level of the said liquid. This orifice *d* is located below the level of the liquid in the tank *a*, so that it will be forced into the congealing liquid under a certain head or pressure. The liquid from *a*, as it passes through the liquid in the vessel *b*, is congealed or solidified and formed into a thread *c*, which is drawn

1. The ethyl sulphuric acid used in the process was obtained by mixing 2 parts strong alcohol with 1 part sulphuric acid, 60° Bé., and gradually heating to 100°.

forth from the congealing-bath and spun and wound by suitable machinery.

Lehner has attempted to insure uniformity in his product [1] by isolating certain of the cellulose nitrates (tri- and tetra-) and eliminating the other lower and higher nitrates.[2] Sulphuric acid is added to increase the fluidity, a vulcanized vegetable oil is incorporated in the mixture, the whole dissolved in acetone or ether-alcohol, and after spinning, immersing the thread for a long time in running water, after which the filament is denitrated with an alkaline sulphide containing a neutral magnesium salt. The denitration is conducted at a temperature of 40° and continued until "the rainbow colors of cellulose are visible under the microscope in polarized light."

In a later process [3] resins such as copal, dammar and sandarac are made use of in combination with an oil as linseed, together with nitrocellulose, and an inorganic salt to render the fiber incombustible. The filament is formed by combining the following three solutions in the manner stated:

Solution 1 is formed by dissolving 500 gm. finely pulverized resin (copal, sandarac, or the like) in 2,400 gm. of ether, shaking the mixture thoroughly at a moderate temperature in a well-stoppered bottle, and permitting the same to stand several days until it becomes clear. The clear solution is then poured off or decanted and mixed with 100 gm. linseed oil and then filtered.

Solution 2, the cellulose solution, is prepared by immersing silk-paper, cellulose, cotton, or wastes from spinning for about fifteen

1. U.S.P. 562626, 1896. In order to produce a perfectly homogeneous mixture of nitrocellulose Lehner found it "necessary to gradually add the cellulose to the nitrating bath," the temperature of the bath being raised cautiously as the nitration proceeds. After the completion of nitration, the product is centrifuged from a portion of the nitrating acids, not washed with water, but immediately plunged into sulphuric acid and again subjected to centrifugal action, the acid-wet resultant mass being then mixed with a vulcanized oil "for the purpose of maintaining the otherwise unstable nitro compounds unchanged." The vulcanized oil was prepared by taking a drying oil as cotton seed, poppy, linseed, or nut oils, treating with half its weight of sulphuric ether in order to modify the reaction, after which is added sulphur chloride in amounts from 10 to 20%, depending on the nature of the oil employed, the mixture being continually agitated during the slow introduction of the chloride. After a short time a yellow precipitate settles out, leaving a clear liquid which is decanted and mixed with nine times its weight of the wet nitrocellulose, the whole mixture being then dissolved in about 5 times its volume of alcohol and ether. After filtration, this constitutes the raw material from which the threads are spun. In vulcanizing vegetable oils with sulphur chloride, care must be taken to keep the temperature down to 20°, or better lower, and to use the minimum amount of chloride, or the resulting product formed will be insoluble in alcohol, ether or acetone, alone or combined.

2. U.S.P. 562732, 1896; 724020, 1903; D.R.P. 82555, 1894; F.P. 221901, 224460, 1892; 243612, 243677, 1894; E.P. 22736, 1892; 24003, 1893; 24009, 1894; 2595, 10868, 1896; Sw.P. 4984, 1892.

3. E.P. 20461, 1900.

minutes in a solution of cuprammonium oxide obtained by dissolving 10 parts sulphate of copper (blue vitriol) in 100 parts of an aqueous solution of ammonia having the sp.gr. 0.975. The cellulose substance is added to the cuprammonium oxide solution in the proportion of about 1 k. of the former to 12 l. of the solution. In some instances a 5% alkaline solution, such as a solution of caustic potash or caustic soda, may be employed in lieu of the cuprammonium oxide solution. The function of the cuprammonium oxide solution is to facilitate the subsequent nitration. The mass is then removed from the bath, thoroughly washed in much warm water, expressed, and finally well dried. It is then transferred, in as flaky a condition as possible, into a mixture of 4 parts sulphuric acid having a sp.gr. of 1.84, and 3 parts of nitric acid of sp.gr. 1.4, the mixture being heated to 75°. It is well stirred in the bath and the acid is poured off after five minutes. The nitrocellulose so obtained is thoroughly washed with water, dried, and wood spirits is poured over in the proportion of 9 parts by weight of the former to 1 part of the nitrocellulose. This mixture is thoroughly shaken until all the nitrocellulose has passed into solution. The solution is then set aside in a cool place for about eight days, until it has become clear, when it is poured off or decanted from the sediment.

Solution 3 is prepared by dissolving 100 gm. of sodium acetate (or of ammonium salts) in 1,000 gm. of dilute alcohol. This solution of an alkali salt is for the purpose of rendering the resultant fiber or thread incombustible.

The above three solutions are now mixed so that 1 k. nitrocellulose is combined with 200 gm. resin, 50 gm. linseed oil, and from 100–200 gm. sodium acetate (or salt of ammonium). The mixture so prepared forms the ground solution or liquid from which the threads or fiber constituting the artificial silk are formed. This may be done by simply causing the liquid to flow into the atmosphere upon a rotating cylinder or upon a moving smooth surface, whereby the solvents are evaporated, leaving a filament of the artificial fiber upon the surface consisting of nitrocellulose combined with a resinous substance and oil. In order to produce a thread or fiber having the characteristic luster and the other prized qualities of silk, the ground liquid should not be allowed to pass directly into the air but through a fine tube into a bath of some solvent of the solvents employed in the three component solutions, consisting of liquids which contain neither water nor oxygen, which would have an oxidizing reaction. Such a bath may consist of oil of turpentine, oil of juniper, benzine, benzol, petroleum, or generally of a liquid hydrocarbon. Were the thread,

as it issues from the orifice under the bath, drawn through a solution or congealing-bath of water or containing water or oxygen, it would not possess the luster and other desirable qualities of the silk. When, however, the liquid is made to pass under a congealing-bath of one of the above liquids (which is done by causing the liquid to issue through fine orifices having a bore of $\frac{1}{2}$ mm., and under a slight pressure caused by having the level of the bath elevated a few centimeters above the orifices) a thick filament is formed, which may be drawn fine within the bath, and be reeled and spun.

The mechanical portion of the process is shown in Figs. 132 and 133, in which letter *A* represents a tank having a gauge *a*, and adapted to be filled with the mixture described, that should be kept at approximately the same level. The mixture flows out of tube *B* and trans-

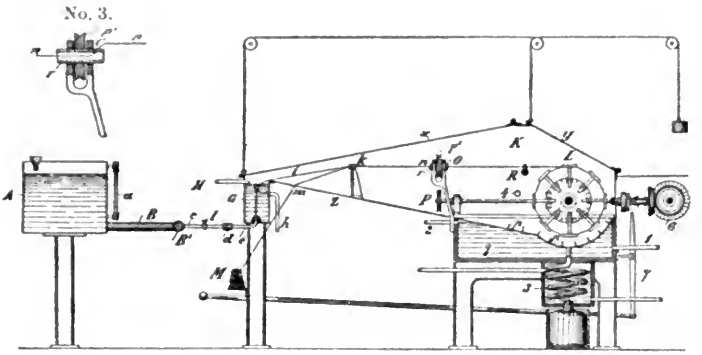

FIG. 132.—The Lehner Apparatus of Making Artificial Silk.

verse tube *B'* into a number of smaller tubes *c*, each of which carries a cock *l*. To these tubes there are connected, by rubber couplings, *d* the bent glass tubes *e*, drawn out somewhat to a point and entering from below a narrow tank *G*. The glass tubes pass through a proper packing into the tank, to prevent leakage. The tank *G* is filled with the congealing-bath described, such as oil of turpentine, petroleum, and should have a somewhat lower level than tank *A*. By this slight difference in pressure a mixture is ejected from tubes *e*, either in the form of thick threads or in the form of gradually increasing lumps that form upon the ends of the tubes. The lump is caught by a wire and drawn slowly out of the tank *G*, over guide *k*, through twister *O* and guide *R* upon reel *L*. This reel thus steadily draws the thread *i* out of tank *G*, the fineness of the thread being proportional to the velocity of the reel. The thread on leaving the tank is thick and soft, but rapidly grows thin within the tank. Fresh liquid is continuously

added through inlet *H*, while the liquid mixed with the solvent flows off through exit *h*.

The threads *i* may be united with one another or with a thread *m* of a different material at the tubes or guides *k*. The thread *m* passes from reel *M* and is simultaneously reeled with thread *i* upon

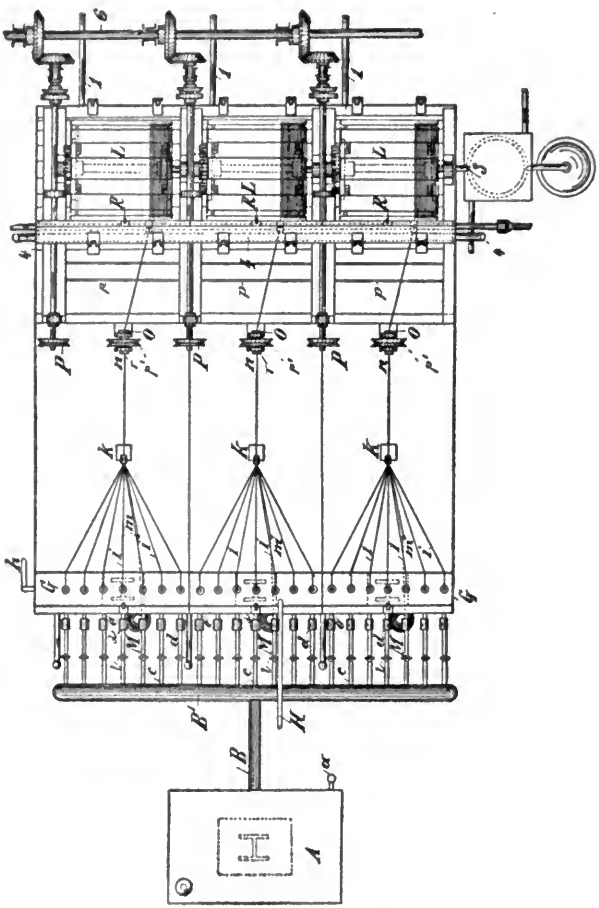

FIG. 133.—The Lehner Apparatus for Making Artificial Silk.

reel *L*. The bottom *Z* of the apparatus has a small perforation through which the thread *m* is admitted. When a spool *M* is run down, it is at once replaced by a full spool.

The threads united at *k* enter the twister *O*. This twister consists, essentially, of a rapidly rotating tube *r* (see particularly Fig. 132, No. 3), having a lateral opening *r'*, i.e., an opening in its periphery.

The thread enters the bore of the tube and leaves the same through the lateral opening, so that the revolution of the tube causes a twisting of the thread. This twisting of the thread is permitted for the reason that the end of the thread at the orifice of the tube *e* is still in a liquid or semi-liquid condition and is, hence, not held fast at this point. Upon the tubes are mounted the pulleys *p*, that are driven by a belt (not shown) from the pulleys *P*. These pulleys receive their motion from a power-shaft 6 by suitable gearing. The reels *L* continually draw the thread through the twister out of the tank *G* and off the reel *M*. Between the reel *L* and twister *O* a thread-guide *R* is arranged which has a reciprocating motion and places the twisted thread upon the reel in the proper manner.

The threads *i m* are united in a closed chamber *K*, which also contains the twister *O*, thread-guide *R*, and reel *L*. To this chamber ready access may be gained by means of two hinged windows *x* and *y*. The floor *Z* of the chamber serves as a condenser for the solvent still adhering to the threads. The floor is provided with partitions *p*, Fig. 131, which accelerate the condensation by presenting a greater cooling-surface. A large portion of the floor is in contact with a basin *q*, filled with cold water, which continually enters at 1 and, when warmed, leaves at 2.

The condensed solvent passes from the floor through cooling-coil 3 and is collected at the end. To rid the threads as much as possible from these adhering matters, a heating-tube 4 is passed through the apparatus. Through this tube there flows a stream of hot water, so that the upper part of the apparatus is heated.

Lehner's success appears to be due to the fact that he circumvented, rather than overcame the obstacles which confronted Chardonnet and his colleagues, his processes being distinguished for their comparative simplicity, both from a mechanical as well as a chemical point of view. On account of working with lesser pressures than Chardonnet, Lehner was enabled to produce finer threads from a given aperture because the total pyroxylin in the solution was reduced about half as compared with the Chardonnet methods, and this upon evaporation produced finer threads, of consequently greater luster. In Switzerland, Lehner established and built up the large works associated with his name, and which daily turn out of the nitro-silk amounts estimated at about 2,800 lb. By using water as the coagulating medium, Lehner was able to recover a large portion of the solvents used. Lehner silk exhibits a close similarity to the Chardonnet filament, being more regular in outline in cross-section, a round, pseudo-tubular form prevailing as the result of the conditions of shrinkage and collapse

of the fiber in elimination of the solvents with the subsequent dehydrating. The constants for "breaking strain" both in the moistened and air-dried condition, in elasticity, resiliency, etc., closely approximates the filament of Chardonnet.

Artificial silk manufactured according to the Lehner process is of an even white color, very beautiful gloss, and soft silk-like feeling. When crushed together it also shows somewhat of the crackle of real silk. According to Silbermann it is only about 7–8% heavier than real silk, its firmness being in proportion to that of Italian mulberry silk as 68 : 100. According to measurements of Thiele, a weakly twisted thread of Lehner silk of 0.5 mm. length, which contained 200 single fibers, broke at an extension of 44 mm. and 1,400 gm. strain. A weakly twisted thread of organzine of ½ mm. length, which contained 840 singles fibers, broke at an extension of 65 mm. and 1,340 gm. strain. Accordingly the greatest strain for the single fiber was —for Lehner silk 7 gm., for organzine 1.6 gm. The diameter of the artificial silk was about 2.5 times as great as the tested natural silk. The fiber should have a 6-fold cross-section and the highest strain for fibers of equal cross-section should give the following figures: for Lehner silk 7 gm., for organzine 9.6 gm. The frangibility for Lehner silk should be about 30% less than that of organzine. Like Chardonnet silk, Lehner artificial silk loses firmness by moistening, yet dyeing causes no difficulties.

According to claims of the inventor and the corroborations of literature the combustibility of Lehner silk is no greater than that of cotton.[1]

1. The following is an official report on the properties of Lehner silk:

Bradford Corporation Conditioning House, June, 8, 1894.

a. The samples submitted to me are purely artificial, containing no filaments of pure silk.

b. The relative strength, compared with Italian pure silk of the same counts (4,010 yards to the ounce), is as 68 to 100.

c. Pure silk has but little elasticity, and when stretched does not go back to its original length; neither does the artificial silk, but its stretching quality (before breaking) is as 73 to 100 relatively.

d. Taken at a denier, measure for measure, the relative weight of the same average diameters of pure and artificial silk is 7.25% more in the latter, which corroborates the relative specific gravities of each.

e. The artificial silk is much evener in counts (taking 20 tests of 10 yards each) than any pure silk.

f. The denitrated artificial silk takes the dye in all shades perfectly even and brilliant.

g. It stands boiling, washing off, and the use of either acids or alkalies equally well as pure silk.

h. The gloss or luster is equal to the best silk. Its appearance, and therefore decorative value, is far above spun chappe or combed silks.

i. In its denitrated state it is less inflammable than cotton, and perfectly safe for storing in quantity, either raw or dyed, and it is less inflammable than any sample of denitrated "artificial silks" we have yet tested.

Walter Townend, Manager.

J. Du Vivier Silk, also Termed "Fismés Silk," was first produced in 1889 in France.[1] It has been described as essentially the same as that of Chardonnet, but a closer inspection of the process will show that there are many new ideas embodied in the methods of Du Vivier. The nitration of the cotton is carried on with dry potassium nitrate (saltpeter) and sulphuric acid, instead of the customary mixture of nitric and sulphuric acids, and at the comparatively high temperatures of 60–80°. The slight solubility of the potassium sulphate formed in the reaction necessitates a larger amount of water in neutralization than with nitric acid as the nitrating acid, but otherwise the finished product is the same. The nitrocellulose is combined with gelatin or albumen, this being the distinct difference from the Chardonnet method, by which, chemically, the product more nearly approaches that of natural silk, the gloss and luster is increased, but the tendering when wetted is also increased, due to the presence of the gelatin. A solvent of both gelatin and nitrocellulose is required, glacial acetic acid being used. The preferred composition consists of nitrocellulose 96, gelatin or isinglass 2, albumen 2, total 100, dissolved in glacial acetic acid 1,600 (all parts by weight). Hence approximately a 6% solution of total solids is considered by Du Vivier as the best concentration for spinning purposes.[2] After the threads have been formed by expression through orifices under water, they are carried through a coagulating bath of sodium bisulphite and afterwards denitrated in hanks. In the various patents taken out by Du Vivier are unessential modifications and additions of the above process, but it is understood that they were not worked on a commercial scale. The addition of gutta percha in carbon bisulphide, passage of the filaments through a mercuric chloride bath and then through an atmosphere of carbon dioxide are some of the procedures suggested. The presence of the albumen and isinglass so tendered the filament, especially in the dampened condition, that, although the appearance and luster were entirely satisfactory, the product does not seem to have passed much beyond the experimental stage, and so far as the author is aware, is not at present manufactured on a commercial scale.

1. F.P. 195654, 195655, 195656, 1889; 208856, 208857, 1890; E.P. 2570, 2571, 1889; U.S.P. 563214, 1896; Belg.P. 84774, 1889; Span.P. 9204, 1889; It.P. 356, 1889; D.R.P. 52977, 1890.

2. As albumen is insoluble in acetic acid, to its aqueous solution is added "slightly carbonated soda" in amount about 35% of the weight of albumen. The mixture obtained is mixed, desiccated at below 20° in order to guard against the formation of insoluble albumen, the deliquescent product being then readily soluble in acetic acid, the sodium acetate formed being unobjectionable. In one process the filament is passed through 3% aqueous phenol and in another modification through an alum solution to coagulate the albumen.

According to Silbermann this product is somewhat more brittle than Chardonnet silk, but of a more dazzling white and a higher gloss, which exceeds that of real silk and in its chatoyant nature suggests the Florentine angling lines. The firmness of Vivier silk, reckoned by the same standard, is only equal to 9, while that of mulberry silk is 38, that of Tussah 48. Thiele also states that the firmness of Vivier silk amounts to only about one-fourth that of mulberry silk. According to the statements of Blanc, Vivier silk, observed under the microscope, consists of two single threads, which have great similarity to Tussah silk, yet differ from the latter in their greater thickness, as each of the threads has a diameter of 20μ, while the single Tussah thread is only 12μ thick. The Vivier threads are round and appear smooth at the first glance, but on closer examination fine longitudinal stripings appear which result for the fact that the thread is finely grooved lengthwise. The two threads forming the single Vivier thread cling close to each other, without a cementing substance being perceptible. The cross-section of the thread has the form of a fairly regular 8, outer lines of which are slightly wavy. A dividing line between the two threads is also imperceptible microscopically. Yet occasionally along with this double form of the thread, single threads of bean-shaped or elliptical cross-section appear. Blanc traces the double form back to the manner of manufacturing the thread; the spinning-tubes lie very close to each other, the emerging threads cling together and unite immediately. The thread is twisted directly after its production or later, the torsion amounting to about 300 revolutions to the meter. The substance of the Vivier thread is transparent like that of the Chardonnet thread, doubly light-refracting, homogeneous, and contains bubbles which become visible as in Chardonnet thread by treatment with Schweitzer's reagent. The inventor has evidently composed the silk of two threads, in order to make his product as much like natural silk as possible. Yet this clinging of the two threads has the disadvantage that the stiffness of the thread is increased thereby. The Vivier thread is not round —that is, equally pliant from all sides—but flat and twice as long as wide, i.e., inflexible in the direction of greatest thickness. The torsion of the thread also has the tendency to make it stiffer.

Process of L. Crespin is designed[1] primarily to use the minimum volume of solvent. To this end, the nitrocellulose is dissolved in a mixture of methyl and ethyl alcohols and ether, to which is added a certain amount of glycerol or castor oil. This collodion is then

1. U.S.P. 820351, 1906, being division of application filed Feb. 4, 1905, Serial No. 244186; E.P. 27565, 1904; F.P. 342077, 1904; abst. J.S.C.I., 1904, **23**, 899.

forced through a suitable nozzle into a water-bath, when part of the solvent is dissolved, after which the threads are wound up and the bath treated for the recovery of the contained solvent.

The method preferred is shown in Fig. 134, designed for the manufacture of ribbons and the like, the threads from the forming-nozzle 16 pass around the angular edge 6 of the bath 17 containing the water on its or their way to the winding-roller 18; 19 indicates the main pipe containing the collodion. The water from the bath containing the mixture of ethyl and methyl alcohol is heated to drive off the alcohol, and the latter condensed and collected. To this

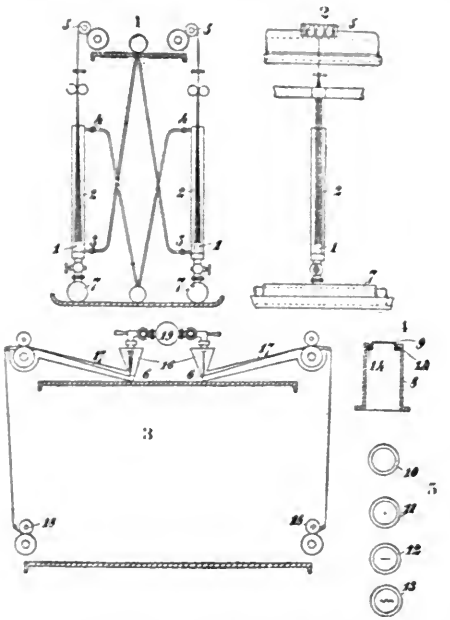

FIG. 134.—The Crespin Process of Making Artificial Silk.

alcohol it only becomes necessary to add again the required weak proportion of sulphuric acid evaporated during the operation and the desired quantities of castor oil, palm oil, or glycerol to obtain a fresh solvent for a further charge of nitrocellulose. As a large portion of the solvent employed may be recovered in this manner, the collodion need not be made very thick. On the contrary, it can be economically made very liquid and fluid, with the result that the heavy pressure previously required to expel the collodion through the nozzles may be very much reduced. In consequence of this the tubes 7 or 19, containing the collodion, may be formed of glass, ebonite, or other suitable material which is inert to, or is incapable of being acted

upon by the collodion. Another advantage of using a very fluid collodion consists in the practicability of employing a forming-nozzle with a series of capillary holes, as indicated in 10. A nozzle may consist of a glass cylinder 8, furnished with a flange, by means of which it may be attached to the cock or tap. At its end is a flanged cap or plate 9, of platinum, which may be perforated with the capillary holes, as shown at 10, or with one larger hole, as at 11, or with straight or undulatory slits, as indicated at 12 and 13 in the same figure, according to whether it is desired to produce artificial silk horsehair, straw, or ribbons. The joint between the cap 9 and the cylinder 8 is maintained by means of a flexible rubber packing-ring 14, the interior pressure keeping the joint tight.

Method of M. Denis[1] differs from that of Crespin in the process of solvent recovery, being otherwise designed both for spinning economically and for regaining the maximum of dissolving fluid. The operation of this process is as follows, and referring to Figs. 135, 136: A suitable liquid at a temperature above the boiling point of ether is introduced into the collector 14, which may be water, and at the commencement of the operation the water fills the collector, and all the cocks on the filament-former being open, the water streams down the tubes 9, carrying with it the collodion filaments issuing from nozzles 6. Ether is but slightly soluble in the water, while the solubility of alcohol at this temperature is about at its maximum. The artificial silk filament will be completely surrounded by hot water as it emerges from the nozzle 6 and be free from contact with air, so that its exterior is not immediately hardened, thereby preventing the imprisonment of solvents in its interior. The ether vapor rises in the tubes 9 into the collector 14 and aids in forcing the heated water through tubes 9. The descending water carries with it the filament and dissolves the alcohol solvent of the collodion. The ether vapor accumulating in the upper part of the collector 14 displaces a quantity of water, which passes through the trap 21a and pipe 21 into the expansion tank 38. In reality the lowering of the level of the liquid in 14 and its rise in 38 are very gradual. The water drops through the tubes 9 into the collectors 19 and is pumped from them through pipe 36, pump 37, and pipe 39 into the expansion tank 38, to again pass through the circuit until sufficiently saturated with alcohol to warrant its being distilled or otherwise treated for the recovery of the alcohol. A definite quantity is withdrawn from the circuit and is replaced by a like quantity of unsaturated water. When the water or other liquid in the collector 14 has reached a suit-

1. U.S.P. 834460, 1906; F.P. 341173, 1904.

ably low level, the float 22 will no longer hold the valve 23 to its seat and the collected ether vapor will be free to pass by pipe 24 to the worm 25, that is kept at a sufficiently low temperature to condense the ether vapor that traverses it, being drawn into the worm by the vacuum pump 27, the residual gas (air) being drawn through the

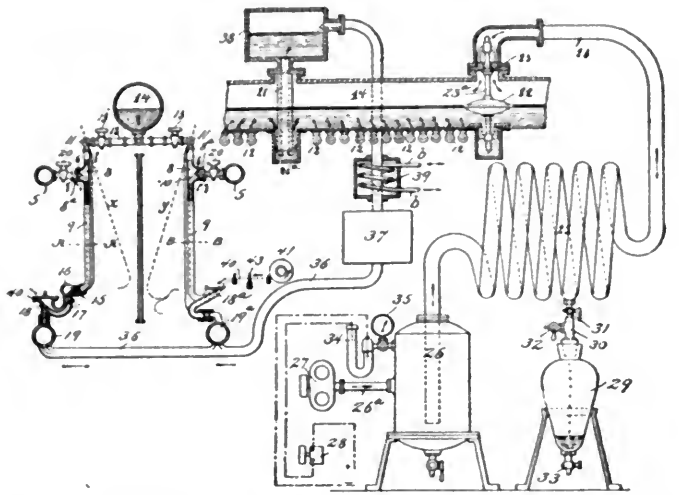

FIG. 135.—The Denis Machine for Producing Threads from Collodion and Recovering the Solvents of Nitrocellulose or Cellulose.

pump. The ether condensate will drop into the glass vessels 29. By closing tap 31 and slowly opening tap 32 the vacuum in the vessels 29 is broken, and the liquid ether condensate can be drawn off through tap 33, which is then closed, as well as tap 32, and the tap 30 slowly opened again to place the glass vessel in operative connec-

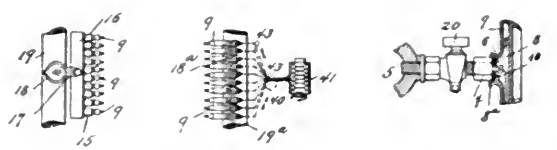

FIG. 136.—The Denis Machine for Producing Threads from Collodion.

tion again with the condenser. As soon as the ether vapor is drawn off from the collector 14 liquid from the expansion-tank 38 will enter the collector, raise the level therein, and close valve 23. The water circulates in a closed cycle and is maintained at the required temperature by passing through chamber or coil *b*, located at any desira-

ble point in the circuit. The water may be replaced by a suitable liquid capable of denitrating the filaments formed.

P. Cazeneuve prefers the use of acetone alone as the pyroxylin solvent [1] on account of the ease with which it can be recovered, employing from 2–3 parts solvent to 1 part pyroxylin, and maintaining the solution at 15–20° [2] during the operation of forcing it through the draw-plates. The opaque threads thus produced are unwound from the spools on which they are received from the draw-plates and are exposed, in the form of hanks, for several minutes to an atmosphere of ammonia, at a temperature of 15–25°. This is said to have the effect of rendering them transparent and lustrous. They are next denitrated at a low temperature by means of a solution of ammonium sulphide or hydrosulphide, reagents which have the property, not shared by metallic sulphides, of increasing luster of the filaments, prepared from the solution of nitrocellulose compounds in acetone. Finally the solvent is recovered by the use of a refrigerating apparatus similar to that employed in condensing carbon bisulphide vapors.

Other Nitrocellulose Filament Processes. H. Vittenet [3] uses acetone instead of an alcohol-ether solvent, and in order to correct the opacity and brittleness of the formed filament due to the rapid evaporation of the acetone solvent, and which the patentee considers is due to the formation of "a hydrate of a mixture of the acetone and nitrocellulose," treats the filament with sulphurous acid [4] after expelling the solvent. It is claimed that the sulphurous acid prevents "hydration" and thus permits of the production of filaments of the desired brilliancy and flexibility. The sulphurous acid is either dissolved in the acetone prior to its employment as a solvent, or a pyroxylin-acetone solution may be directly treated with sulphur dioxide gas, the latter method being preferable. A stream of the gas is allowed to flow into the solution just before spinning, until the requisite amount has been added, the gas decreasing materially the viscosity of the pyroxylin solution. It is claimed the use of sulphurous acid increases the brilliancy and translucency, and aids in the subsequent recovery of the acetone.

E. Cadoret,[5] who did considerable work along the lines of coating

1. F.P. 316693, 1901, and First Addition thereto, dated Oct. 26, 1904; the tendency of acetone alone as a solvent is to produce a friable, worthless filament (author).

2. F.P. 350723, 1905, and First Addition thereto, dated Feb. 6, 1905; abst. J.S.C.I., 1905, **24**, 194, 331, 799, 967.

3. U.S.P. 828155, 1906; E.P. 1686, 1905; F.P. 350383, 1904; D.R.P. 171639, 1905.

4. U.S.P. 842125, 1907.

5. Not Cardaret; E.P. 8558, 1894; 12451, 1896; Cadoret and E. Delgrade,

textiles with nitrocellulose,[1] combines both glue and pyroxylin through the intermediary of their mutual solvent, acetic acid. E. Bronnert and T. Schlumberger[2] economize on solvent by the use of strong ethyl alcohol to which is added citric, oxalic, tartaric, lactic or levulinic acids, to increase the solubility, avoiding the danger of drying moist nitrocellulose by incorporating with it small amounts of calcium or magnesium chlorides. A. Loncle and H. Chartrey[3] use a mixture of ether and methyl alcohol together with 1% acetone for the solvent, and dry the formed thread by simple exposure in the atmosphere for about seventeen hours. E. Oberle and H. Newbold[4] spin the filament by means of reduced pressure and suction instead of forcing the solution through the spinnerets by pressure. Nitrostarch combined with cellulose nitrate through the solvent methyl alcohol and acetone has been described[5] as a suitable material for filament formation. A. Petit[6] and independently P. Germain[7] describe

E.P. 21485, 1892; Vogel and Cadoret, Lehnes Farb. Ztg., 1897, **8**, 7; Cadoret, Rev. Ind., 1894, **25**, 64; Mon. Teint., 1894, **38**, 5; Ind. Text., 1894, **10**, 111. See P. Jenny, D.R.P. 98602, 1897.

1. See Textiloid, F.P. 256854, 1896; abst. J.S.C.I., 1893, **12**, 779; 1895, **14**, 569; 1897, **16**, 449; 1898, **17**, 164. Muster Ztg., 1897, **46**, 450.

2. E.P. 6858, 1896; abst. J.S.C.I., 1897, **16**, 355; see Eder (Ber., 1880, **13**, 1841). The product obtained by the Vereinigte Kunstseidenfabriken Frankfurt by spinning a solution of acid cellulose in caustic soda and precipitating the thread as it comes out of the capillaries by means of an acid bath, appears to be only capable of yielding good results when 10 parts of cotton are mixed with 100 parts of sulphuric acid of sp.gr. 1.55, the mass thrown into water and the precipitated acid cellulose, after washing, dissolved in 100 parts of caustic soda solution, sp.gr. 1.12.

3. Mon. teint., **41**, 66; In the patented process of E. Huwart (F.P. 383555, 1907) nitrocellulose is dissolved in substances belonging to the class of acetals of the fatty series or in their chlorine or bromine derivatives, or in the aldehydes or ethers derived from these acetals. This class of substances is characterized by the presence of an aldehyde radical combined with two similar or different alkyl radicals, as for example in the compounds, $CH_2(OCH_3)_2$ and $C_2H_4(OCH_3)(OC_2H_5)$. These compounds may be employed alone or in methyl or ethyl alcohol solution.

4. Leip. Farb. Ztg., 1897, 311; Muster Z., 1897, **46**, 311. F.P. 258257, 1896; see Heberlein & Co., E.P. 3861, 1901; "Production of Silky Gloss upon Cotton Yarn by Impregnating with Collodion;" also Text. Col., 1897, **19**, 229; Grandquist, E.P. 23729, 1899.

5. G. Arnold, A. Fox, A. Scott and H. Roberts (E.P. 3450, 1906); G. Gorrand (E.P. 6166, 1906) prepares the collodion from which the threads are spun from a solution of nitrocellulose in acetone, amyl alcohol and acetic acid, ammonium sulphide being the denitrifier; C. Brodbeck (E.P. 18119, 1890) puts a final coating of silk fibroin on the filament. For finishing artificial silk, see Hübner, E.P. 19166, 1910.

6. Not Peit; U.S.P. 665975, 1901; E.P. 15343, 1900; best results are said to have been obtained by using dry nitrocellulose 100; india-rubber solution 7; stannous chloride 5; the solvent being benzene. Such a formula is impossible of combination.

7. F.P. 355016, 1905. In F.P. 360395, 1905, Germain prepares a homogeneous paste by dissolving nitrocellulose, celluloid, and naphthalene in acetone, and adding to the solution powdered barium sulphate. The paste is then spun into threads, which are at once immersed in dilute sulphuric acid. This removes the acetone, which may be recovered for further use. The excess of acid remaining in the threads is neutralized by treatment with barium hydroxide solution. Other means, such as heating, etc., may be employed for the removal of the acetone. The threads are not denitrated, and they may be redissolved when desired, the barium sulphate, of course, remaining undissolved.

combinations of pyroxylin with caoutchouc, acetone oil being the solvent, the process of E. de la Grange being substantially the same.[1]

A. Lumière and Sons[2] believe in filtering the pyroxylin solution when very fluid, subsequently concentrating (when necessary) by partial vacuum distillation.[3] Their method of "collodion filament" manufacture[4] comprises a chamber adapted to be traversed by the filaments after leaving the discharge nozzle and containing a spongy material intended to be separated with alcohol, in combination with a rotatable receptacle designed to contain a coagulating substance and into which the filament falls by gravity from the chamber, and is coiled by the rotation of the receptacle about an axis non-coincident with that of the filament.

In addition to improvements in spinning methods (described elsewhere), R. Strehlenert[5] has made many minor suggestions looking toward simplifying the formation of nitrocellulose filaments, especially from a mechanical point of view. J. Duquesnoy[6] dissolves the pyroxylin in a mixture of equal volumes of acetone, glacial acetic acid and amyl alcohol, and expresses the solution from a capillary orifice projecting into the external atmosphere and without the interposition of a fluid coagulating medium. In the process of J. Sauverzac[7] the nitrocellulose is dissolved in the solution of a metallic chloride

1. E.P. 16332, 1900; Sw.P. 22680. For pumps for supplying collodions to filters and drawing apparatus, see L. Desmarais, G. Morane and M. Henis, E.P. 6783, 1905; F.P. 342655, 1904; abst. J.S.C.I., 1904, **23**, 933.

2. F.P. 361324, 1905. Their process of preparing "collodion of high standard" for artificial silk manufacture capable of immediate drawing into threads, consists in dissolving thoroughly air-dried nitrocellulose in a mixture of methyl and ethyl alcohol and ether, then distilling the filtered solution to half its volume. For 300 k. cellulose, 200 l. each of methyl and ethyl alcohols, and 1,600 l. ether, are employed. Distillation is continued until the ether content is reduced to 600 l.

3. F.P. 361324, 1905, their fluid collodion being prepared by dissolving 300 parts nitrocellulose in 200 parts methyl alcohol, 200 parts ethyl alcohol, and 1,600 parts ether. Owing to the excess of ether, this collodion is very fluid, and can be easily filtered under a slight pressure. The collodion is then distilled in a vessel provided with stirrers, until 1,000 parts ether have been driven off and condensed for future use. The concentrated collodion is cooled, and having already been filtered and freed from air while in the dilute condition, it can be directly stored in closed vessels and is then ready for spinning.

For the filtration of collodion (F.P. 361329, 1905) for the preparation of artificial silk, a continuous roll of filtering medium is provided outside the press. A portion of the fabric is clamped tightly over the perforated support by means of a screw-head, and the collodion is admitted from below under pressure, through a pipe provided with a stopcock. When the filtering surface has become clogged, the stopcock is closed, the conduit for filtered solution is also closed, the screw raised slightly, and a new filtering surface is pulled through from the roll, and is clamped down ready for use.

4. E.P. 89A, 1907.

5. Abst. J.S.C.I., 1897, **16**, 533, 907; 1899, **18**, 579; 1902, **21**, 969; 1903, **22**, 92, 1345.

6. U.S.P. 663739, 1900; E.P. 8799, 1900.

7. F.P. 402950, 1908; see also E.P. 1858, 1896; abst. J.S.C.I., 1897, **16**, 335.

in alcohol. A solution of 10 gm. of aluminum chloride in 100 cc. of alcohol dissolves 50 gm. of nitrocellulose, and the mixture may be diluted with as much as 80% of water. The threads spun from this solution are said to be very supple and elastic. H. Woltereck [1] passes cotton thread of varying degrees of fineness, the luster of which may be increased by previous mercerization, through a nitrocellulose solution, subsequently denitrating in the usual manner.

Denitration of Cellulose Nitrate. The necessity of denitrating nitrocellulose artificial silks in order to reduce their inflammability is perhaps the weakest point in the process, and the point which is of most importance as standing in the way of further development. All forms of cellulose with the exception of the acetate, irrespective of their treatments in the formation of filaments, are eventually regenerated to cellulose, or nearly so, before becoming merchantable products. It appears that in 1878 [2]—before the artificial silk industry had commenced—the disadvantage of the inflammability of the cellulose nitrates was appreciated, as witnessed by the publication of methods of denitration. In the earliest process of which the author is aware the dried pyroxylin was deoxidized by digestion with sulphurous anhydride under pressure, with sodium bisulphite solution containing phosphoric acid or with sodium thiosulphate solution. In 1900 L. Vignon [3] studied the reduction of nitrocelluloses by the action of ferrous chloride and found that when 20 cc. sat. aq. sol. of ferrous chloride was boiled for ten minutes with 1 gm. of a cellulose nitrate, there was liberation of nitric oxide, and it was shown that although the nitro groups were eliminated the aldehydic groups were left intact.[4] The next year H. Richter,[5] as the result of exhaust-

1. E.P. 3898, 1898; E. Breuer (D.R.P. 55293, 1890) has devised a novel process for producing colored nitrocellulose threads by coating a roller of sheet metal or other material with a layer of pyroxylin, then with dissolved glue, proceeding alternately until the required thickness is obtained. The roller is then put in a screw-cutting lathe, and the coating cut through spirally, thus furnishing a continuous thread. For the artificial silk process of L. Lederer in which an acetone solution of nitrocellulose is mixed with an acetylene tetrachloride solution of cellulose acetate, see E.P. 11625, 1909.

2. P. Magnier and L. Doerflinger, E.P. 4711, 1878; see also W. Green, E.P. 9879, 1889; "Denitration of Pyroxylin," Chem. Zeit., 1905, **29**, 420.

3. C.R., 1900, **131** (12) 530; Bull. Soc. Chim., 1901, (3), **25**, 130.

4. He found that when cellulose and oxycellulose of maximum and minimum nitration (13.5, 13.9, 8.19, and 8.36% nitrogen respectively) were treated with ferrous chloride in boiling aqueous solution, the products formed were oxycelluloses with a cupric reduction equivalent to that of an oxycellulose prepared directly by the action of chloric acid. Conversely, where ammonium sulphide was used as the denitrifier, and at 35–40°, the products obtained were without action on copper solutions. This is to be construed as indicating that nitrated cellulose should be regarded as a derivative of oxycellulose.

5. E.P. 12695, 1901; where cupric salts are used, the fluid after denitration contains cuprous salts, and by the addition of common salt and conducting sulphur dioxide through the solution, cupric salts are again formed.

ive studies on the denitration of artificial silk, obtained patent protection for a method in which the nitrated filament is treated in an acid solution of a metallic salt which is in a lower state of oxidation and is capable of passing to a higher state of oxidation. Suitable salts found are cuprous chloride, cuprous oxychloride, ferrous, manganous, chromous, antimonous, stannous, mercurous or cobaltous salts, ferrocyanides and nitroprussides. With the use of cuprous salts, hydrochloric acid is advantageous. In order to facilitate and render more complete the denitration, certain agents may be added which will cause the nitrocellulose to swell, such as alcohol, ether, ketones, glycerol, epichlorhydrin, turpentine, and solutions of caoutchouc and glue. Substances may also be added with advantage which dissolve the salts employed, such as alkaline thiosulphates, ammonium sulphate, and the chlorides of the alkalies and alkaline earths, or of iron, zinc or manganese. Cuprous chloride and oxychloride, being difficultly soluble, may be dissolved in acid and partially neutralized with ammonia, or dissolved in ammonia and neutralized with acid. Where large amounts are treated, methods for drawing off the nitrogen oxides and recovering them are described and may be useful, but it is customary where small amounts are denitrated at a time to make no effort to recover the liberated nitrogen.[1] Other denitrating agents which have been employed are ammonium nitrate,[2]

1. In Chem. Ztg., 1909, **33**, 174, E. Bindschedler claims priority through his deposition of June 15, 1908, over Coulier's Belg. P. of Sept. 28, 1908, for method of recovering sulphur, nitrites, ammonia, alkalis, and alkaline earths from baths used in denitrating cellulose nitrates. P. Heermann (Mitt. kgl. Materialprüfungsamt., 1910, **28**, 227) reports that milky or chalk-like spots found to develop in a consignment of nitrocellulose artificial silk gradually increased until the whole skein was attacked, the fiber becoming brittle and worthless. The aqueous extract of the damaged parts was strongly acid, and gave a precipitate of barium sulphate equivalent to 1.03% of sulphuric anhydride. The undamaged parts (also a sample of the same silk not denitrated) gave an aqueous extract which was neutral and did not give a precipitate of barium sulphate, but sulphuric acid was found after heating the silk with caustic soda. The undamaged portion heated in an air-bath to 120–130°, quickly became acid and on longer heating at 125 130° partly carbonized. Well-made nitrocellulose artificial silk showed no trace of carbonizing when heated to 135-140°, and the aqueous extract showed no trace of sulphuric acid; only a trace of the acid was detected after heating with caustic soda. The trouble is therefore ascribed to the presence in the raw nitrocellulose of sulphuric acid, probably existing as a cellulose sulphuric ester, which was not removed on denitrating and which decomposed gradually on keeping the silk, liberating sulphuric acid.

2. Process of R. Valette, E.P. 20637, 1904; F.P. 344660, 1904; abst. J.S.C.I., 1904, **23**, 1212. Serret (F.P. 369170) denitrates with aluminum chloride. C. Dow (D.R.P. 153671) seeks to still further reduce danger of inflammability by treatment of the filament with formaldehyde after denitration, but if the latter process is properly conducted, further treatment is unnecessary. By the process of the Soc. Anon. Hongroise pour la Fabr. de la Soie de Chardonnet (F.P. 410652, 1909) solutions of alkali or alkaline earth sulphydrate which have been use for the denitration of nitrocellulose, and which contain sulphides and nitrites, are added to excess of mineral acid (*e.g.*, the acid which has been used for the nitra-

ferrous chloride,[1] ferrous chloride in alcohol,[2] formaldehyde,[3] and sulphocarbonates,[4] but none have proven as satisfactory as the sulphides and hydrosulphides, although the latter vary greatly in their action, depending on the metal in combination.[5] Thus the calcium compounds have a tendency to harden and weaken the filament, the magnesium salt works rapidly and tenders the thread the least, while the ammonium compounds require great care in handling, and are comparatively costly. Although P. Cazeneuve[6] has described a process of denitrating pyroxylin by treating its acetone solution with metallic sulphides before formation into filaments, the threads are usually wound on to bobbins and denitrated in this manner. In one method[7] the bobbins of artificial silk are arranged

tion); the hydrogen sulphide and the nitrous anhydride thus evolved interact, sulphur being precipitated and nitric oxide set free.

1. Bechamp, Article "Cellulose," in Wurtz, Dict. de Chimie, 781.

2. Chardonnet, First Addition, dated Mar. 3, 1897, to F.P. 231230, 1893.

3. Knöfler, F.P. 247855, 1895; D.R.P. 88556, 1894.

4. See D. Woodman, J.A.C.S., 1892, **14**, 112, on denitration of celluloid to cellulose for production of incandescent electric light filaments. According to A. Dulitz (Chem. Ztg., 1910, **34**, 989) it is impossible to obtain a product absolutely free from residual traces of nitrogen without the destruction of the threads. For practical purposes it is sufficient to prepare a denitrated silk containing 0.05% of nitrogen, provided the distribution of the denitrating action be absolutely uniform. Uniform denitration depends on uniformity in composition of the nitrocellulose threads and their uniform shrinkage; also on uniform moisture in the threads which are suspended in the denitrating bath. The quantity of denitrating liquid per k. of nitrocellulose must always be constant and the composition, the initial temperature and the changes in temperature of the bath during the process must be accurately controlled. The time of action of the denitrating bath is of the highest importance. The titration of the bath and the examination of the threads with the polarizing microscope are not very satisfactory guides in judging the end-point of the denitration process. In order to be quite certain, the threads should be treated rather longer than appears to be strictly necessary. Nevertheless it must always be borne in mind that a prolongation of the treatment involves a loss of strength of the product. Any addition of substances, such as resins or oils, to the collodion has an unfavorable influence on the denitration and necessitates a longer treatment, with consequent loss of strength. The addition of acids with a view to reducing the viscosity of the collodion also detracts from the quality of the finished silk and appears to promote the formation of oxycellulose. The author points out that whereas fresh solutions of hydrosulphides attack the denitrated threads but slightly at 40°, a solution which has already been used for denitration attacks them powerfully. He believes that the nitric acid groups split off from the cellulose during denitration are capable of inducing a secondary oxidation of the cellulose, part of which then enters into solution in the bath. The hydrosulphides alone are not sufficient to fix these nitric groups in such way as to avoid injury to the cellulose, and various other substances are generally added. The concentration of the denitrating bath should be fairly high.

5. Bechamp, l.c.; Blondeau, Ann. Chim. Phys., 1863, (3), **68**, 162.

6. First Addition, dated Oct. 26, 1904, to F.P. 346693, 1904; abst. J.S.C.I., 1905, **24**, 194. By this process it is stated that a solution in acetone of "true amino-nitrocellulose" is obtained, which is specially adapted to the direct formation of threads.

7. Process of H. Diamanti, P. Loisef and H. Champin, F.P. 378143, 1906; see also H. Diamanti, E.P. 17460, 1907; abst. J.S.C.I., 1907, **26**, 1136; in L. Bergier's process (F.P. 349134, 1904) the threads are denitrated by immersion for some

vertically in a wooden frame which can be inserted as a whole inside an airtight vat. This vat, which may be made of wood or stoneware, is provided with means for placing it in communication with a tank containing the denitrating solution, and also with an exhausting apparatus. A number of vats are worked in series, each being connected to its immediate neighbors. The vats are first exhausted, and the denitrating solution then circulated through the whole series, care being taken that the fresh solution always comes in contact with bobbins which have already been almost completely denitrated.

The preferred strength of sulphide depends upon the metal attached, and with ammonium sulphide with the amount of sulphur, it having been found that the yellow or polysulphides are much more energetic denitrifiers than the simpler sulphides. For this reason it is indicated to add sulphur either direct to ammonium sulphide prepared by saturating aqueous ammonia with hydrogen sulphide, or else by exposing the sulphide to the light to polymerize. The denitration may be accelerated, according to G. Gorrand[1] by adding a few drops of acetic acid to the nitrocellulose solution before spinning, where ammonium sulphydrate is employed. The correct strength of the denitrating bath may be determined by (*a*) the loss of solubility of the treated thread in cellulose nitrate solvents, (*b*) determination of nitrogen in thread, (*c*) and examination under the microscope. With the latter procedure, if the sulphide is unduly concentrated, the too vigorous action may be recognized by the appearance of the threads, which will be dull and lusterless, occasionally corroded, and free from color formation under the polariscope. The weakness of the sulphide is readily determined by the solubility of the (supposedly) denitrated thread in a mixture of alcohol, ether and acetone, equal parts of each. Theoretically 8 molecules of hydrogen sulphide are required per molecule tetranitrocellulose, but experience has shown that 4 molecules of sulphide, with proper precautions, are sufficient to reduce the nitrogen contents under 0.25%, and usually from 0.14–0.18%. With but traces of nitrogen remaining, examination with diphenylamine in concentrated sulphuric acid, especially when made against control samples with definite amounts of nitrogen therein, admit of quite accurate approximations being made. The denitrated filament, like cellulose,

hours in a solution of cuprous chloride acidified with HCl, and at a temperature of 60°, all traces of copper being subsequently removed by treatment with dilute hydrochloric acid, followed by thorough washing.

1. F.P. 354424, 1905; E.P. 6166, 1906; in the process of the Soc. Anonyme de Soie Artif. de Tubize (F.P. 358987, 1905) the silk is allowed to remain on the bobbin during the denitration and subsequent bleaching, thus obviating twisting, dividing and making into skeins.

is permeable by water, and Germain[1] proposes to overcome this by dipping the threads after denitration into a weak pyroxylin lacquer, just sufficient to render the filaments impermeable, but insufficient to materially raise the inflammability. Various inventors, e.g., R. Valette,[2] D. Bachrach,[3] R. Langhans,[4] L. Bethisy,[5] A. Plaissetty,[6] Du Vivier,[7] Cadoret,[8] Lehner[9] and others[10] have endeavored to reduce the inflammability by adding certain metallic salts without denitrating the nitrocellulose, but as yet without satisfactory results. Attempts have also been made to reduce the tendency of the fiber to weaken when wetted with water by the use of partially water-soluble sulphonated vegetable oils, especially corn and castor.

The fiber upon emerging from the denitrating bath is a dirty, pale yellow, and has therefore to be subjected to a bleaching process before being offered for sale. A small amount of bleaching powder and hydrochloric acid is generally used, the quantities for Chardonnet silk being stated as bleaching powder 4, commercial hydrochloric acid 8, and artificial silk 16. The bleached skeins are carefully washed in cold water until all free chlorine is removed and either directly dried or subjected to an intermediate softening process with Turkey-

1. D.R.P. 160396, 1905; see also Compagnie de la Soie de Beaulieu, D.R.P. 217128, 1907.

2. E.P. 20637, 1901, using ammonium nitrate. See also "Decreasing Inflammability" in Chapter XIV.

3. U.S.P. 794581, 1905; E.P. 2339, 1901; certain volatile, non-aqueous liquid silicates such as methyl, ethyl and amyl silicates, the so-called "silicic ethers" being used. In this and the following processes the thread is dipped in a concentrated solution of the salt or ester and after thorough impregnation, dried under tension to increase the luster.

4. U.S.P. 571530, 1896, phosphosulphuric and phosphoric acids being claimed.

5. U.S.P. 625313, 1899, zinc chloride and gelatin being added; in the method of A. Dubose (Bull. Rouen, 1909, Sealed Document, No. 530; Chem. Zeit., 1905, **29**, 822; Bull. Rouen, 1905, **33**, 318; 1908, **36**, 272; Muster Ztg., 1905, **53**, 19) tannin is added to the solvent used in making Chardonnet silk. Thus the spun fiber contains tannin, and a reducing substance is employed for the purpose of denitration, instead of ammonium sulphide, the base of this reducing substance uniting with the tannin to form an insoluble compound. Before denitrating, it is recommended that the fiber be passed through Turkey red oil. Substances which are recommended as reducers are sulphides of magnesium, aluminum, antimony, tin, and silicon; magnesium, calcium, or aluminum hydrosulphides or stannites, and tin chlorides.

6. E.P. 9087, 1900, anhydrous aluminum chloride or nitrate being applied either directly to the nitrocellulose or added with a solvent.

7. Rev. Industrielle, 1890, 194; D.R.P. 52977, 1889.

8. F.P. 256854, 1896. E. Muller (D.R.P. 222777, 1909) protects the silk gloss produced on fabrics by goffering, from the injurious action of moisture by treatment with nitrocellulose solutions, employing epichlorhydrin as the nitrocellulose solvent.

9. D.R.P. 55949, 1889; 58508, 1890; 82555, 1894.

10. In the process of the Soc. Anon. pour l'Etude Ind. de la Soie Serret, F.P. 369170, 1906, the fiber is impregnated with a solution of aluminum chloride, while with Soc. pour la fabrication en Italie de la soie Artif. par le procédé de Chardonnet, F.P. 367803, 1906, calcium or magnesium chloride is employed. See Chardonnet, Ind. Text., 1893, **9**, 175.

red oil, sulphonated lard oil or similar material to counteract the tendency to harshness produced by the bleaching process. The final product has a white color, and this may be intensified by the addition of a trace of methyl violet, indigo, or ultramarine.

Solvent Recovery. The recovery of the ether and alcohol contained in the air of artificial silk factories has been many times proposed, but is extremely difficult on account of the high degree to which the vapors are diluted with air; and the mechanical equipment required to take care of the millions of cubic feet of air circulating in a properly ventilated factory of any considerable magnitude. The methods proposed previous to 1904 have all proven unsuccessful from an economical point of view, and need not be mentioned here. In one method largely practiced [1] the air containing ether and alcohol vapor is passed through absorption towers containing sulphuric acid, the latter being distilled in vacuum to recover the alcohol and ether. It was found, however,[2] that by mixing the acid with 1 or 2 molecules of water, the tendency toward formation of ethyl sulphuric acid was diminished, and loss of ether from this source obviated.[3] By varying the concentration of the acid, the speed with which the air passes through it, and the temperature of the condensing chambers, the by-products formed—which at first militated greatly against the process—have been materially reduced in amount. In the method of O. Bucquet [4] a liquid fat or fatty acid, either alone or mixed with an oil of low solidifying point, is used as an absorbent of the vapors of the volatile solvents. When the absorbent is saturated, the volatile solvent is recovered by distillation under diminished pressure. In the process of A. de Chardonnet, patented in 1906,[5] the air containing the vapors is passed through a series of towers

1. J.S.C.I., 1906, **25**, 71.

2. F.P. 350290, 1904. In the process of Fabrique de Soie Artif. de Tubize, F.P. 401262, 1908, in place of sulphuric acid 66° Bé. it is proposed to use acid of no more than 62° Bé., claiming that the absorptive power of the more dilute acid is sufficient, and the reconcentration which is required from time to time may be carried out in leaden vessels instead of the platinum ones employed for the 66° Bé. strength. In Dervain's process (F.P. 350298, 1904) the spinning operation is conducted in closed chambers with the primary object of limiting the amount of air which it is necessary to treat, and thus diminish the amount of sulphuric acid required for absorption.

3. In U.S.P. 712406, F. DuPont, the material carrying the alcohol-ether vapor is immersed in alcohol and a gas caused to pass through it, carrying off the ether.

4. D.R.P. 196699, 1907.

5. D.R.P. 207554, 1907; F.P. 377673, 1906, and First Addition thereto, dated July 27, 1906; abst. J.S.C.I., 1907, **26**, 1088. In D.R.P. 207554 the method consists in bringing the alcohol and ether intimately into contact with the higher-boiling members of the fatty acid alcohols, such as propyl, butyl, amyl, and other alcohols, as well as their derivatives such as butyl acetate, butyric acid, etc., in general also the so-called last runnings of the alcohol distillation process, and then distilling off from the resulting solution the compounds named.

or chambers into which amyl alcohol or other high boiling alcohols are sprayed. The vapors are absorbed by the alcohol, which is passed through the series of towers in the opposite direction to the air, the weak solution obtained in the last tower of the series being sprayed into the next and so on. The alcohol or ether is recovered from the strong solution obtained in the first tower by distillation either conducted at the atmospheric pressure by heat, or in the cold under reduced pressure. The residue left in the still is used over again. In the manufacture of artificial silk, the alcohol and ether which are given off at different stages in the process are either recovered separately or are allowed to mix and the alcohol recovered first by passing the air through a similar train of apparatus into which water or water containing a little alcohol or calcium chloride is sprayed.

The essence of H. Diamanti's method is to collect[1] the vapors given off by the threads by first causing these latter, immediately on issuing from the draw plates, to enter a passage traversed by a suction current of air moving in the opposite direction to the movement of the threads, the latter being then rolled upon spools in an almost air-tight casing and further treated by means of a controllable blowing of air on each spool and a suction device for removing the vapors, the air thus forced in being fresh air, dried artificially or not, or purified air previously used in the process.

In the process of S. Douge[2] the first step is to concentrate the mixture of air and vapor by successive treatments in centrifugal separators, or similar means, returning the vapor-free air to the factory, and the air rich in vapor is then subjected to a selected treatment of absorption, distillation, etc. The specific gravities of air and the vapors of the usual solvents (ether, chloroform, carbon bisulphide) being so different, the method of treatment is said to give very excellent results, the difference in cost between that for treating the whole bulk of air with absorbent and that for first "separating" and then treating the concentrated mixture with absorbent, being much in favor of the newer method.

In a still more recent process[3] the mixture of vapor and air is compressed and cooled and passed through an apparatus in which progressive refrigeration is possible. The compressed and cooled mixed gases are further cooled by permitting them to expand, and are

1. E.P. 5020, 1907; see solvent recovery apparatus of M. Denis (E.P. 4534, 1905; F.P. 341173, 1904).
2. E.P. 1595, 1907.
3. Soc. "L'Air Liquide" (Soc. anon. pour l'Etude et l'Exploit. des Proc. G. Claude), F.P. 397791, 1908, and First Addition thereto, dated July 16, 1909; F.P. 413571, 1909.

then used as cooling agents for a further quantity of the compressed gases. By this arrangement very low temperatures may be reached, but it is essential that the temperature should not be such as would cause the separated liquids to freeze and block the apparatus.

In the procedure of C. Crepelle-Fontaine[1] the air containing the vapors of alcohol or ether is withdrawn from the working place by a fan and is discharged into the base of a column, divided by horizontal partitions into sections, each of which is provided with a bubbling weir or hood and an overflow pipe. The air passes up the column and bubbles through an acid or other suitable absorbing liquid, which flows down the column from an overhead supply tank. The liquid flows from the bottom of the column through a cooler, where its temperature is reduced, to a well from which it is pumped back into the overhead tank. The column is provided with thermometers, as it is necessary for the successful recovery of the vapors to maintain the column and washing liquid at a suitably low temperature. It is claimed[2] that by the use of a machine analogous to those of the Linde, Lourmiet, or Pictet types, whereby by combined refrigeration and compression, the volatile vapors may be condensed and subsequently separated by centrifugal or other means from the atmosphere of the workshop. In a recent paper read before the French Academy on this subject, a process for solvent recovery was described and said to be remarkably economical and satisfactory from the yield obtained. The method consists in compressing the air containing the volatile vapors under 4 atmospheres, passing it up a large tower, and gradually cooling from the bottom until at the top a temperature near that of liquid air is reached. By this means the water is eliminated at first, thus obviating the difficulty of freezing in the pump. The yield was stated to be from 90–95% of the volatile vapors in the air.[3]

1. F.P. 396664, 1908; 401182, 1909; U.S.P. 951067, 1910; E.P. 2400, 1909; abst. J.S.C.I., 1909, **28**, 597.

2. Soc. Anon. pour la Fabrication de la Soie de Chardonnet, F.P. 387054, 1908.

3. The Soc. pour la Fabr. en Italie de la Soie Artif. par le Procédé de Chardonnet, in F.P. 371985, 1906, displace the volatile solvent by a current of steam, which is subsequently condensed in a cooling or condensing medium. Their F.P. 367803, 1906, and First Addition thereto, dated Mar. 11, 1907, describe, that according to the principal patent, the products obtained by forcing a collodion solution through an orifice, are washed either by pure water, or by an aqueous solution of some metallic salt, which is led through a perforated pipe placed above the bobbins or rollers on which the product is being wound. In the addition an apparatus is described which is applicable to rollers or bobbins which are driven by a rotating cylinder with which they are in contact. Around the lower half of the driving cylinder, a hemi-cylindrical trough is arranged, into which the washing liquor is led at one end by a pipe which almost touches the bottom, leaving by an overflow pipe at the other end of the trough. The overflowing liquor is run either into the next trough if several are being used, or into the distilling apparatus. When the machine is working, the rapidly rotating cylinder carries with it some

In the recently protected process of A. de Chardonnet for the collection and recovery of volatile solvents in the preparation of artificial filaments, etc., from collodion,[1] the concentration of the vapors of the solvent in the air must be kept as high as possible. The spinning apparatus is enclosed in a glass case which is opened only when necessary. The ordinary rail carrying the spinnerets is replaced by a revolving plate having spinnerets arranged in the form of a circle. Each plate is provided with a control tap and a special filter, and when the spinning from any particular plate is interrupted a tight-fitting globe is placed over the plate to prevent loss of solvent. The filaments pass up through guide-forks onto the bobbins, which, when full, are placed in the lower part of the casing until all the ether and most of the alcohol have evaporated. The unwinding of the bobbins is effected after immersing them in water in order to collect some of the alcohol, and the spindle of the bobbin during the unwinding process is surrounded by a light metal cylinder against which the dilute alcohol is thrown by centrifugal force and collected. For the absorption of the ether and alcohol vapors, amyl alcohol (or its homologues) is employed, as described, l.c., in a vessel containing plates. The vapors of the amyl alcohol carried off from the first absorption vessel by the issuing air are absorbed in a second plate-apparatus charged with dilute ethyl alcohol, which may be obtained from the bobbins. The vapors carried off from the second vessel are absorbed in a third, which is charged with water. The alcohol and ether absorbed by the amyl alcohol are recovered by rectification in a rectifying plate-column, and the alcohol from the second and third absorption vessels is recovered in a second rectifying column.

of the washing liquid which is thus brought into intimate contact with the product which is being wound on the bobbins. It becomes charged with the mixture of alcohol and ether and then falls back into the trough. G. Claude (C.R., 1909, **149**, 780) computes that one million francs' worth of volatile liquids are lost annually in the artificial silk industry alone, and recommends the method of recovery by freezing, using the same principle as that by which liquid air is made. To get rid of the water vapor the air is first cooled by passing through refrigerators full of obstructions. The air is then cooled to -90°, when the vapor tension of alcohol and ether are negligible. He states it is possible to treat 20 cu.m. of air per horse power per hour and recover 90% of the vapors.

1. F.P. 413359, 1909; cf. J.S.C.I., 1907, **26**, 1088. The process of the Fab. de Soie artificielle de Tubize (E.P. 11729, 1910; F.P. 412887, 1909; abst. J.S.C.I., 1910, **29**, 1004) relates to the arrangement of the walls of the cabinet, which completely encloses the filament-producing apparatus. The front of the cabinet is composed of two superposed counterbalanced frames, dividing the wall into an upper and a lower accessible zone, corresponding with the position of the essential parts of the apparatus, i.e., the capillaries below and the winding drums above. According to J. Smith, H. L. Mitchell, W. H. Askham, and H. Hey (E.P. 18605, 1909) the air containing the vapor of the solvent is drawn into the cylinder of a suitable pump and at each stroke of the pump a quantity of absorbing oil is

The patent of A. Collard [1] relates to apparatus for the recovery of ether, acetone, alcohol and similar vapors, by bringing the air into intimate contact with a suitable absorbing liquid. In one form, the apparatus comprises a scrubbing column and a gas-washer; the absorbing liquid is sprayed with the air into the lower part of the scrubbing column, a supply of pure absorbing liquid is admitted at the top of the column, and a third supply of pure liquid is admitted to the washer. Distilling, rectifying and condensing apparatus are also provided for separating the ether, acetone, etc., from the absorbing liquid.

A method which is stated [2] to have proved successful since 1906 in a Hungarian artificial silk factory, consists in operating the reels on which the artificial silk is wound by means of a roller on to which water is sprinkled. In this way the solvent is washed out of the wet fibers, the supply of water being so regulated that the liquid flowing off the roller contains about 14% of ether-alcohol, which is subsequently recovered by distillation.

"Cuprammonium Silks" [3] is the general term applied to those artificial filaments which result from dissolving cellulose in an ammoniacal copper solution, forming filaments therefrom, and regenerating cellulose from the copper-containing compound. The first patent connected with this process was taken out in France by L. Depeissis in 1890,[4] but on account of the death of the inventor before the final acceptation of the patent,[5] according to the French law of that date, the patent was never published, the only record of its contents being a synopsis appearing in a French publication. Being abandoned by the inventor's death, the original is unavailable for reference. Nothing more was heard of the process until 1897, when H. Pauly [6] patented a process in which the essentials are anticipated by the pre-

drawn into the cylinder along with the vapor-laden air. These become intimately mixed in the cylinder and the solvent is absorbed by the oil. Oil and air are discharged from the pump, the air, now freed from the solvent, escapes and the oil containing the solvent is collected in a reservoir and subsequently distilled to regain the solvent for use.

1. F.P. 410555, 1909; see also F.P. 413571, 1909.

2. A. Vajdafy, Vegyészeti Lapok, Budapest, 1909, **4**, 103. Chem. Zeit., 1910, **34**, Rep., 75.

3. For early history see E.P. 1717, 1868; 827, 1875. A. E. Healey (E.P. 185, 1878) treated paper with "copperized ammonia."

4. F.P. 203741, 1890; see J. Persoz, Rev. gen. mat. col., 1899, No. 27, 86; C. Suvern, "Artificial Silk," 1900, 78.

5. Inasmuch as the patent of Depeissis, although canceled in 1892 on account of non-payment of the renewal fees, remains as a document, the legal value of the Pauly patents is a debatable question.

6. D.R.P. 98642, 1897; E.P. 28631, 1897; F.P. 272718, 1897.

viously described process of Depeissis.[1] Two years later[2] M. Fremery and J. Urban took out their first patent embodying the details of the process, which, in conjunction with the researches of E. Bronnert,[3] led to the founding of the Vereinigte Glanzstoff-Fabriken at Elberfeld, Germany, which has been very successful commercially in the development of the art[4]. The work of R. Linkmeyer in this field begins in 1904,[5] and has been prolific in overcoming difficulties inherent in the various phases of the process. A. Bloxam in England has patented notable advances for the Glanzstoff Company,[6] while J. Bemberg,[7]

1. The English Specification has since been restricted by an amendment, so that the original claim of Depeissis, of the addition of a portion of some albuminoid substance to the solution, has been omitted in the latter specification.

2. E.P. 6557, 6641, 6656, 6735, 18884, 20630, 24101, 1899; 4303, 1900; U.S.P. 617009, 1899; 650715, 661214, 1900; 691257, 705748, 1902; F.P. 286692, 1899, and First Addition thereto, dated Oct. 14, 1899; 286726, 1899, and First Addition thereto, dated Dec. 4, 1899; 286925, 1899; D.R.P. 111313, 1899.

3. Bronnert, E.P. 18260, 18884, 1899; 4303, 1900; U.S.P. 646351, 646381, 646799, 1900; Bull. Muhl., 1900, 177; Mon. Text. Ind., 1901, **16**, 817.; Bronnert and Fremery, E.P. 22092, 1907; Fremery, Bronnert and Urban, U.S.P. 658632, 1900; 672350, 1901; 698254, 1902; 856857, 1907; E.P. 20801, 1900; Fremery and Bronnert, U.S.P. 804191, 1905; Fremery and Urban, U.S.P. 650715, 1900; 705748, 1902; abst. J.S.C.I., 1897, **16**, 355; 1900, **19**, 239, 240, 344, 531, 659, 819, 821, 1105; 1901, **20**, 38, 119, 1207, 1231; 1902, **21**, 1150; 1905, **24**, 1251; Ind. Text., 1900, **16**, 352.

4. This company, with headquarters at Elberfeld, are said to employ at present over 7,000 hands, other works being at Niedermorschweiler, managed by Bronnert, and Oberbruch, Germany, managed by Fremery and Urban, and are also interested in works at Givet and at Izieux, France. "Givet Silk" was so named from this firm's product manufactured at Givet. The Spanish branch, the Sociedad Española de seda Parisien, has ceased operations. The British Glanzstoff, Ltd., has started works at Flint, of a capacity to ultimately employ 2,000 hands.

5. U.S.P. 795526, 1905; 839013, 839014, 1906; 842568, 852126, 857640, 866371, 1907; E.P. 1501, 4746, 4755, 4761, 4765, 6356, 1905; 3549, 3566, 16088, 1906; F.P. 346722, 347960, 1904; 350889, 352528, 353187, 356402, 357837, 361061, 1905; D.R.P. 183557, 185139, 1904; abst. J.S.C.I., 1905, **24**, 238, 438, 670, 671, 888, 967, 1011; 1906, **25**, 120, 371, 473, 1090; 1907, **26**, 197, 252, 406, 606, 868, 1088.

6. E.P. 1283, 1284, 1745, 1905; F.P. 351206, 351207, 351208, 1905; abst. J.S.C.I., 1905, **24**, 855, 856. See Vereinigte Glanzstoff-Fabriken, D.R.P. 218490, 1907.

7. D.R.P. 162866, 1900, and First Addition thereto, D.R.P. 174508, 1905, in which it is claimed that a copper hydroxide cellulose, readily soluble in ammonia, is obtained by the action of alkalis on a mixture of cellulose and copper; for example, a mixture of cotton and copper is wetted with water (100–150% of the weight of the cotton) and ammonia is either added as a solution or the gas is passed over the mixture. The resulting blue mixture is said to be readily soluble in ammonia, giving highly concentrated cupro-cellulose solutions. Lecoeur (F.P. 381939, 1906; 392868, 392869, 1908; E.P. 14143, 28149, 1908; U.S.P. 967397, 1910; abst. J.S.C.I., 1908, **27**, 221) dissolves cellulose in an ammoniacal cupric hydroxide solution and forces through a capillary orifice into a coagulating bath in the usual manner, but the bath is maintained at a temperature of 27–35°, and consists of a mixture of equal parts of a solution containing 44–49% NaOH and a solution containing 23–28% anhydrous sodium carbonate. A rather weaker bath is employed for artificial hair. After spinning the thread is wound on a bobbin, and plunged into a second coagulating bath containing in solution the same amount of carbonat as in the first bath, but only about 7–8% NaOH. The copper and ammonia remaining in the product are eliminated by a passage through a dilute solution of sodium bisulphate to which 1–4% free acid has been added. The original solution is forced through the orifices at a pressure between 1 and

E. Berenguer,[1] C. Bouequey,[2] J. Chaubet,[3] L. Cuntz,[4] E. Eck,[5] J. Foltzer,[6] A. Kracht,[7] W. Lake,[8] A. Lecoeur,[9]

1.5 k. where size denier 30, 25, and 20 (i.e., 450 meters per gm.) is desired. Especial emphasis is placed upon the necessity of a thorough treatment of the thread in the second bath, where it should remain for at least a half hour.

1. E.P. 10545, 1907, in which the solutions in concentrated form are prepared by treating moist cellulose with an ammoniacal solution to which is subsequently added cupric carbonate.

2. F.P. 376065, 1907, the prescribed formula being cellulose (14 parts) immersed in a mixture consisting of ammonia (100), water (100), sodium hydroxide (10 parts) and copper acetate. The cellulose fibers thus become swollen, and a further addition of sodium hydroxide (5 parts), water (10) and ammonia (10 parts), is said to bring the cellulose completely into solution.

3. E.P. 14525, 1899; see L. Collardon, U.S.P. 953319, 1910.

4. In the manufacture of artificial silk from cuprammonium solutions of cellulose, specially favorable results as regards luster and strength are said to be obtained by the use of a coagulating bath consisting of a very concentrated solution of sodium hydroxide. According to the author's invention (F.P. 383412, 383413, 1907), results equally satisfactory are afforded by a coagulating bath containing only a small proportion of alkali hydroxide together with a large proportion of a chloride of an alkali or alkaline-earth metal. Suitable baths are prepared by dissolving 30 parts of sodium or calcium chloride and 3 parts of sodium hydroxide in 100 parts of water.

5. E. Eck and E. Bechtel, U.S.P. 839825, 840611, 1907.

6. F.P. 345687, 1904; 369402, 1906, in which the cellulose, dissolved in cuprammonium solution or other solvent, is led from a reservoir on to a revolving surface, while one or more felting machines blow animal or vegetable fibers on as it leaves the orifice. The cylinder revolves in a bath of coagulating liquid such as sulphuric acid, etc. The coagulum is detached from the revolving surface by a knife, and, after being pressed between two cylinders, enters a second bath containing concentrated caustic soda or potash solution, where complete precipitation under tension takes place. The excess of liquor is then removed, and the material is at the same time stamped with the desired design, and finally washed in dilute acid.

7. F.P. 355064, 1905, the method consisting in forcing a concentrated solution of cellulose in ammoniacal cupric oxide solution, 5 to 10%, through a hole larger than the size of the desired thread, treating the product in a sodium carbonate bath, then drawing the threads out to the desired fineness, and, when hardened, introducing them into a 35% solution of caustic potash or soda.

8. E.P. 3549, 1906; according to Soc. Anon. pour l'Etude Ind. de la Soie Serret (F.P. 363949, 1906), water-resisting artificial silk having the same tenacity in the wet as in the dry state, is produced by coating natural sil kfibers with cellulose by passing them through a solution of the latter. To protect them against the action of the solvents employed, the silk fibers may be treated with formaldehyde or other compounds having a similar action upon them. The fibers thus coated are spun either together with one another, or with uncoated silk fibers. In the latter case, the uncoated fibers are preferably stretched while being spun or twisted with the coated fibers, so that when the yarns produced are submitted to tension, the strain may be chiefly borne by the uncoated fibers.

9. E.P. 16442, 1906; 14143, 28149, 1908; F.P. 374277, 381939, 1906; according to this investigator in the precipitation of cellulose from its solution in cuprammonium, the use of acids in the coagulating liquid tends to give products which are milky or opaque and not over strong. With alkalis the threads obtained are clear, supple and strong, but though suitable for the manufacture of thick threads, such baths cannot be used for the preparation of threads of a fine or even medium titer. The best results are obtained by using solutions of the bisulphates of the alkali metals, of such strength that coagulation is instantaneous and the ammonia and copper hydroxide completely neutralized. Upon leaving this first bath the threads traverse a second, more dilute one, and are finally obtained in a supple, elastic and strong condition. Solutions of colloidal hydrated cuprammonium oxide can be prepared in two ways: firstly, by treating a solution of a copper salt with ammonia and caustic alkalis with subsequent dialysis of the solution, and

R. Müller,[1] R. Pawlikowski,[2] J. Vermeesch,[3] and others[4] have contributed

secondly, by the simultaneous action of air and ammonia on metallic copper with subsequent dialysis. The liquors thus prepared will be hereafter referred to as liquors *A* and *B* respectively. If liquor *A* is so prepared as to contain more than 12 gm. of copper per l., it contains deleterious compounds which cannot be removed by dialysis. A solution containing only 12 gm. of copper per l. is, however, only capable of dissolving 30 gm. of cellulose, and this proportion is too small for the manufacture of a sufficiently strong filament. It is found that the best product is obtained if a mixture of the two liquors be employed, the proportions being such that the resulting mixture contains about 25 gm. or more per l. of copper in the state of colloidal hydrated cuprammonium oxide, but of which no more than about 12 gm. of copper per l. is derived from liquor *A*.

1. U.S.P. 779175, 792888, 1905. F. and A. van Bosch, and O. Muller (E.P. 6942, 1906) have found that cellulose articles, such as threads, films, etc., prepared by dissolving the cellulose of cotton-seed hulls by the ordinary solvents of cellulose (E.P. 3211, 1906) may be produced in a range of colors varying from red to pale yellow, by leaving in the cellulose a certain proportion of the natural coloring matter of the hulls. Darker shades can be obtained by adding to the cellulose the desired proportion of the colored alkaline liquor obtained in the first stage of the treatment of the cotton-seed hulls. The colored solutions of cellulose are formed into solid articles by precipitation in solutions with an acid reaction.

2. In this process (F.P. 403488, 1909) cellulose is steeped for several hours in a solution of copper oxychloride in aqueous ammonia, until it is practically all dissolved. Copper oxychloride is a substance of variable composition, but about 90 gm. of it and 850–900 cc. of ammonia of sp.gr. 0.93 will generally suffice for dissolving 100 gm. of cotton wool. The cupric oxychloride may be employed in admixture with other compounds of copper, such as cuprous oxychloride, cuprous chloride, cuprous oxide, cupric oxide, cupric carbonate, or cupric hydroxide. It is stated that the solution of the cellulose takes place more rapidly and completely than with the ordinary cuprammonium solutions, owing to the presence of the chlorides, and it is not necessary to subject the cellulose to a preliminary treatment with alkali hydroxides or powerful bleaching agents. The cellulose is precipitated from the solution by treatment with dilute acids.

3. U.S.P. 836620, 1906; E.P. 9251, 1906; F.P. 365057, 1906; in which is described a process of manufacturing glossy textile fibers from a solution of cellulose in copper ammonia, discharged in the shape of fine jets from capillary orifices, consisting in introducing the jets into a precipitating liquid consisting of acidulated or alkalinized glycerol, or monosulphoglyceric acid in water and glycerol, the threads being subsequently introduced into a neutralizing bath consisting of a soluble salt, as NaCl, in which sulphuric acid can be substituted for the constituent acid, employing a dilute solution of sodium bisulphate followed preferably by washing. See also Vermeesch, U.S.P. 850695, 1907.

4. Meister, Lucius and Brüning (U.S.P. 779175, 1905; E.P. 21988, 1904; F.P. 350220, 1905; abst. J.S.C.I., 1905, **24**, 129), introduce cuprammoniacal solution containing about 5% of hydrated cellulose into a caustic soda solution of about 40%, then treats with sulphuric acid of 12%. The Hanauer Kunstseidefabrik, Hanau (E.P. 10164, 10165, 1907) pass cellulose, dissolved in an ammoniacal solution of cupric oxide, from an opening or former, through heated caustic soda solution so as to form a film inclosing a liquid internal portion, then exposing the product to the air until it becomes solidified throughout, and then passing it through caustic soda solution and if it be desired to decolorize the product subjecting it to the action of acidulated water. They find (D.R.P. 220711, 1907; 222893, 1908) where sulphites are used as coagulants, more brilliant fibers are produced, whereas bisulphites favor a more thorough coagulation and production of thinner fibers. The washing out of the copper, which for the greater part goes into aqueous solution as copper tetra-aminesulphite, is readily effected. In their D.R.P. 221041, 1908, cuprammonium cellulose solutions are forced through fine orifices into coagulating baths consisting of cold or warm, saturated solutions of bisulphites, e.g., sodium bisulphite. The coagulating bath may be reinforced, during the process, by passing sulphur dioxide through it. The fibers are then

mainly along the lines of preparing ammoniacal solutions in which the minimum of ammonia is used and in the mechanical details of spinning acceptable filaments. Many of the suggestions herein recorded and changes advocated are too recent for time to have demonstrated their respective merits. The different precipitating solutions, preliminary treatment of the cotton or cellulose, solution of the copper from the spun filament, alkali solvent recovery and production of maximum luster, are the topics which apparently have received the most minute attention.

The process in general requires very great care and attention to detail for commercial success, a condition of uniform low temperature, and a fixed ratio between copper, ammonia and cellulose.[1] The latter gives best results when mercerized or oxidized, the finished thread, in its dyeing properties at least, deporting itself like an oxycellulose.[2] Cuprammonium filaments are no more inflammable than cotton cellulose. A former great drawback to the success of this process lay in the fact that cellulose cannot readily be dissolved directly in large quantities of ammoniacal oxide of copper in such a manner that the solution may present a degree of concentration sufficient to permit

washed with dilute acids to remove the traces of copper, then washed with water and finally treated with sodium carbonate solution at a temperature about 70°. The ammonia is readily recovered from the coagulating bath after the process, while the copper, which is chiefly present in its tetramine sulphite, can be easily removed from the fibers by washing. See also Consortium Mülhousien pour la Fabrication de Fils Brillants (E.P. 13331, 1899); H. Reisenfeld and F. Taurke, Ber., 1905, **38**, 2798. G. Guadagni (E.P. 1265, 1908; 25986, 1910; F.P. 386339, 1908; D.R.P. 216669, 1908; abst. J.S.C.I., 1908, **27**, 682) has devised an apparatus for producing copper-ammonia-cellulose solutions with a view of effecting a more ready action at a lower temperature, whereby the Schweitzer solution is overlaid with the moist cellulose and through the solution air is blown and then, saturated with ammonia, is led through the moist cellulose, thereby effecting the solution of the latter.

1. E. Berl (Chem. Zeit., 1910, **34**, 532) has investigated the formation and properties of cuprammonium-cellulose, and finds that only ammoniacal solutions of copper hydroxide or of basic copper salts dissolve cellulose; ammoniacal solutions of crystalloid copper-tetramine sulphate, $Cu(NH_3)_4SO_4$, do not dissolve it. The viscosity of cuprammonium-cellulose depends on the previous preparation of the cellulose, the quantity dissolved, and the age of the solution. The solution greedily absorbs oxygen, oxycellulose of little value for spinning, being formed. On dialyzing cuprammonium-cellulose in ammonia, a jelly is obtained, which on drying *in vacuo* over sulphuric acid, gives a blue powder, soluble in ammonia, and containing 69.5% of cellulose and 30.5% of copper hydroxide. A greenish-blue powder soluble in ammonia and containing 62% of cellulose is obtained by precipitating cuprammonium-cellulose with formaldehyde. Alcohol precipitates a mixture of cellulose and black cupric oxide, which is no longer soluble in ammonia. The formation of cuprammonium-cellulose is stated to be a colloidal phenomenon, the colloidal portion of the cuprammonium hydroxide joining the cellulose to form an adsorption product soluble in ammonia; this explains the various reactions and the want of stoichiometric ratios between the copper and cellulose on solution and precipitation.

2. Prud'homme (Jour. Soc. Dyers, 1891, 148); E. Bronnert (Rev. Mat. Col., Sept., 1900, 267), notes that the hydrocellulose of Girard is almost insoluble in cuprammonium, as is starch, but is rendered soluble by alkali treatment.

of spinning acceptable filaments. Of the numerous processes suggested to overcome this obstacle, nearly all have been based upon the energetic action of fixed alkalis before the solution, with a view to producing a previous dehydration of the cellulose.

Cuprammonium silks, as compared with those prepared from the cellulose nitrates, are not combustible or explosive, are equal to the latter in tenacity and elasticity, and do not possess the scroop (rustle) of natural weighted silk. The methods of production are free from danger, no inflammable solids or solvents being employed, and the denitration process (so expensive and troublesome in the Chardonnet silks) has no counterpart in cuprammonium filaments. The relative point of expense is a debatable question. While at first glance it might seem that the absence of the denitration process would place the cuprammonium silks at a much greater advantage as to cost of production, the advocates of the nitrocellulose silks have called attention to the multitude of mechanical refinements in production as a tendency to offset this. When these filaments are placed in water they often display an easily observed fluorescence which the nitro silks do not.

Glanzstoff Silk or **Givet Silk,** also known as "Parisian Artificial Silk," "Soie de Paris," "Lustra Cellulose," "Oberbruch Silk," and "Artiseta," is the development of Fremery, Urban and Bronnert, and is, commercially, the most successful of the cuprammonium-cellulose processes. While Depeissis proposed to prepare the cellulose solution by dissolving cellulose at the ordinary temperature in the ammoniacal copper solution, the mode of working was defective because the liquid was too slow in dissolving the cellulose, often two weeks being required, and furthermore, the solutions were so dilute that the percentage of contained cellulose was relatively small. Moreover, solution was always accompanied by oxidation, which greatly changed the cellulose molecule, and in a manner detrimental to the spun filament. In the H. Pauly patent[1] this oxidation is materially reduced by preparing

1. H. Pauly, E.P. 28631, 1897; F.P. 272718, 1897; D.R.P. 98642, 1897; Sw.P. 16077 (issued to Fremery and Urban). It is claimed that Fremery and Urban took out these patents under the name of Pauly. The original process consisted in freeing cellulose from fats and oils by dilute caustic soda, then dissolving in ammoniacal copper solution prepared by dissolving copper turnings (preferably mixed with the turnings of a more electro-magnetic metal such as platinum) in an upright tube, allowing the aqua ammonia to trickle down, and at the same time forcing oxygen up the column. The best strength of solution was found to be 15 gm. copper per liter in which about 45 gm. of cellulose would dissolve by digesting for about eight days. To prevent the cellulose precipitating and decomposing, the temperature was kept below 30°, the solution filtered through glass wool or sand by suction, coagulated by dilute acetic acid, and dried in warm air. Lengthy descriptions of the Pauly process to be found in the literature, are descriptions of the subsequent refinements of Fremery, Bronnert and Urban.

the solution in the cold, after the method originated by J. Mercer. Still solution of the cellulose was slow. Bronnert materially reduced the length of time necessary to properly effect this solution, by first transforming the cellulose into its hydrate.[1] The soda cellulose formed is then triturated with finely divided crystallized copper sulphate, and subsequently treated with ammonia, the substances being used in the proportion of their combining weights as follows: 162 parts by weight of air-dry cellulose (cotton or purified wood pulp) in a finely comminuted state, 80 parts NaOH and 500 parts water are brought together, stirred thoroughly and after the lapse of an hour or two, 250–255 parts (theory calls for 249) blue vitriol crystals are added in small quantities in order to keep down the temperature, a pale blue, uniform mass resulting. Aqua ammonia of 26° Bé. is then poured over in amount equivalent to about 15 molecules. Solution readily takes place, a semitransparent and viscid mass resulting. When the sodium sulphate formed as the result of the interaction subsides, the supernatant solution is separated by decantation.[2] The reaction is considered finished and the fluid suitable for spinning when 4–5 cc. run from a burette or other small orifice forms a continuous thread.[3]

1. W. Normann (G. Z. Celluloid Suppl., 1906, **21**, 3; from Chem. Ztg., 1906, **47**) finds that cellulose impregnated with a solution of copper hydroxide in caustic soda produces a copper soda cellulose compound containing 1 molecule cupric oxide for 2 molecules cellulose, that this compound is insoluble in dilute ammonia, and that this is the reason why a solution of cellulose in Schweitzer's reagent can be precipitated by sodium hydroxide solution, as in the manufacture of artificial silk. In E.P. 20801, 1900, Bonnert, Fremery and Urban, the cellulose is dissolved in a concentrated "solution" of cupric carbonate in a 16–18% solution of ammonia. In Bronnert's preferred formula, 100 k. cellulose are mixed with 1,000 l. of a solution containing 30 k. sodium carbonate and 50 k. caustic soda, and warmed in a closed vessel for about 3½ hours under a pressure of 2½ atmospheres, the mercerized cotton thus obtained being dried, bleached, washed, and again dried, when it is ready for the cuprammoniacal solution (Sweitzer's reagent). The Rheinische Kunstseide Fabrik Akt-Ges. (F.P. 405571, 1909) describe a process in which cottonseed hulls is utilized as the source of cellulose. The solvent is prepared by treating 1-3 parts of solid copper suphate with 2–4 parts of a solution of sodium hydroxide at 21° Bé. and adding to the mixture 5–15 parts of aqueous ammonia of 25° Bé. The solution is then cooled to 0°, the crystals which form are separated, the liquid being sufficient for dissolving one part of cellulose at any convenient temperature.

2. U.S.P. 658632, 1900; 672350, 1901; the temperature of solution being kept within −5° to +5°. See also Fremery and Urban, E.P. 6641, 24101, 1899.

3. U.S.P. 646351, 661214, 1900; the cuprammonium is prepared by forming a saturated aqueous solution of cupric sulphate, filtering on account of the separation (among other things) of a small amount of cupric carbonate from the carbonates normally present in the water, or by the addition of a small amount of sulphuric acid, which, by dissolving the copper carbonate, causes the solution to clear up again. Ammonia is then added in small portions and with much agitation of the copper solution, a pale blue precipitate of cupric hydroxide being formed. Addition of ammonia is continued until a drop of the filtrate produces no precipitate with ammonia, but does precipitate blue upon addition of a drop of a cupric salt. The mixture is then brought into a centrifuge containing a felt lining, the ammonium sulphate formed in the reaction removed and used for fertilizing purposes, and the cupric hydroxide washed practically free from sulphates. Ammonia is then again added, when the copper passes into the deep blue solution

without visible solid[1] particles.[2] It is then forced under a pressure of 1.5–2 atmospheres through a draw plate containing holes 0.12–0.15 mm. in diameter, into a precipitating bath of acid or alkaline glycerol, sodium chloride or sodium bisulphate, to remove the copper present in the filaments.[3]

The washing is an important division of the process, for in contradistinction to the ordinary porous and absorbent cotton thread, the gelatinous and difficultly permeable cuprammonium filament is not readily penetrated by fluids. In the preferred method of washing of Fremery and Urban[4] in which the threads are spooled or in a coiled-up condition, they are brought in contact only with comparatively small quantities of the washing fluid in order not to dilute too suddenly the liquid adhering to or contained in the threads, and thereby avoid the formation of insoluble basic salts, or combinations with the salts used in dissolving the cellulose. This may be best effected, according to the patentees, by causing the water to flow

of cuprammonium, a small amount of ferric hydroxide (from iron always present in commercial blue vitriol), being removed by filtration. Although an excess of ammonia in the solution is not detrimental, it is a useless expenditure of money. A satisfactory working concentration of the cuprammonium is such that each liter of solution contains between 10–15 gm. copper, solutions of this copper content being capable of dissolving 45–50 gm. cotton cellulose. Hime and Noad (E.P. 7716, 1889) facilitate the oxidation of the copper electrolytically; C. Wright crumples up sheet copper, places in a tall cylinder and covers with ammonia, when atmospheric air is caused to bubble through the liquid column at a speed equivalent to about 40 times the volume of liquid used per hour, the process requiring about six hours. Erdmann (J. pr. Chem., **76**, 385) concludes that the cuprammonia solutions of cellulose are not, strictly speaking, solutions of cellulose at all, the latter being rather diffused and gelatinized through a highly hydrated and attenuated solid. On the other hand, Cramer has apparently demonstrated by osmotic pressure experiments that this inference is untenable, and that the solution of the cellulose may be more properly considered as complete.

1. U.S.P. 804191, 1905; E.P. 1283, 1284, 1905; F.P. 351206, 351208, 1905; D.R.P. 169567, 1905. Inasmuch as the solubility of the cellulose decreases as the temperature of the cuprammonium salt solution increases, while the decomposition of the cellulose increases with increasing temperatures, the mixture should be kept comparatively cool until the cellulose has been completely dissolved in order to prevent decomposition.

2. In E.P. 22092, 1907, the patentees claim that when the cellulose is precipitated from its cuprammonium solution by passing into a solution of caustic soda at a temperature of 45°–60° the decomposition of the cellulose solution is almost instantaneous, and the speed of drawing off the thread may be increased over that employed when the caustic soda solutions are used at a lower temperature, without fear of breakage. The products obtained at 45°–65° take up dyestuffs more strongly than those obtained at 40°.

3. In E.P. 9268, 1908, glucose, saccharose and lactose are claimed as precipitating liquids, at a temperature of 45–75°, when the process used is that described in E.P. 27707, 1907.

4. U.S.P. 661214, 1900; 705748, 1902; the reason given for washing successively with small amounts of water is that by bringing cellulose filaments in contact with a great bulk of water, basic salts such as zinc oxychloride, or insoluble metallic compounds such as cupric hydroxide readily form, and which cannot be eliminated by continued washing with water alone. For utilizing the refuse from the manufacture of artificial silk from cellulose see Verein. Glanzstoff-Fabr., E. P. 15700, 1910.

successively over a number of spools of filaments, and arranged one over the other. The supply of washing liquid is so regulated as to bring only such small quantities (and this is important) at once into contact with the spooled cellulose, when the formation of insoluble basic salts is prevented. As soon as the uppermost spools are entirely washed they are removed, the lower spools being successively transferred from below upward, and nearer to the supply of wash water.

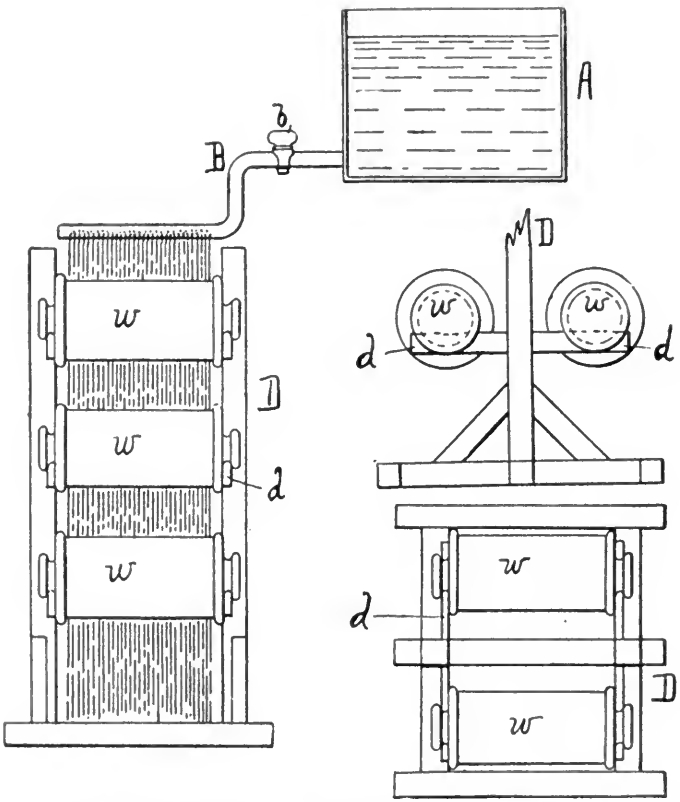

Fig. 137.—Washing Artificial Filaments According to Fremery and Urban.

This method of washing is shown in Fig. 137, in which *A* denotes a suitable reservoir or other source of supply for the washing liquid with one or more delivery pipes *B*, having cocks or valves *b* and perforations in those portions of the discharge-pipes which lie immediately over the superposed spools *w* of cellulose threads to be washed. These spools *w* are mounted on arms *d*, arranged in a suitable frame *D*, so that they can be readily transferred from one pair of supporting-arms to another.

In a more recent[1] invention these inventors claim that when an ammoniacal cupriferous solution of cellulose prepared at a temperature below 10°, as described in U.S.P., 617009, is projected through a suitable opening, such as a slit or a comparatively wide cylindrical orifice into a strong caustic alkali solution, that is to say, a solution having a sp.gr. of 1.280–1.320, the film produced in one case and the thick thread in the other are brilliant, strong and elastic, and are, moreover, waterproof even when they have been washed with acid to remove the copper they contain. Thus the thick threads made in one operation, that is to say, without spinning several fine threads together, as has been customary heretofore, are excellently suited as substitutes for horsehair.

The following examples illustrate the invention:

Two hundered and forty k. of cellulose, previously treated successively with a cold concentrated solution of caustic soda and an oxidizing bleaching agent is described in U.S.P. 646531, are dissolved in, say, 3,000 l. of a cupriferous ammoniacal solution at a low temperature in the usual manner, and the solution is injected through capillary tubes into a strong solution of caustic soda, preferably a cold solution containing not less than 20%. The threads of coagulated cupriferous cellulose thus produced are wound up, washed with water until free from adhering caustic soda, and dried under tension.[2]

Another modification of the process results from[3] projecting cellulose in a cupric ferrous ammoniacal solution, through capillary tubes into a liquid capable of precipitating the cellulose, such as dilute acetic acid, winding the wet thread thus produced onto a roller revolving in a bath of dilute acid, such as acetic, and after washing away the copper and ammonia drying under tension. The economical value of the process resides in the fact that both the ammonia and copper can be recovered from the acid solution. When, however, the process is used for making threads of considerable thickness or for making films, to which purpose large capillary tubes or slit-shape openings must be used for the injecting apparatus, the threads obtained

1. See U.S.P. 856857, 1907; E.P. 16495, 1907.

2. U.S.P. 804191, 1905; in E.P. 16495, 1906, the threads or fibers passing from the nozzles through the precipitating liquor are laid in groups on conveying bands which move in an upward direction, at a speed regulated to the rate of flow from the nozzles. On these bands the fibers are washed or irrigated (on the counter-current principle, so that the chemicals used can be easily recovered) to free them from the precipitating liquid, and then passed to cylinders upon which they are dried.

3. E.P. 1283, 1905; see E. Brandenberger, E.P. 15190, 1909; J. Brandenberger, E.P. 24809, 1908; F.P. 405429, 1908; abst. J.S.C.I., 1909, 28, 851.

are so dull and inelastic that they are practically useless, and the films are not transparent, being brittle and tender.

To produce thick threads, films and ribbons[1] cuprammoniacal cellulose solutions are injected through slits, into strong caustic-alkali solution, and afterwards immersing the forms thus produced, before they are washed into a cold strong solution of caustic alkali; containing no less than 20% NaOH or treating them centrifugally with such solution for a shorter period. This solution may be that into which the cellulose solution was injected in order to produce the form, in which case it will contain a little ammonia; the ammonia is advantageous provided it does not exceed about 6% of the solution, when it begins to dissolve the surface of the cellulose form, and thus to roughen it.[2]

It is better, however, to use a fresh solution of caustic soda, and to apply it with aid of centrifugal action, such as that adopted in mercerizing hanks of cotton. For instance, the threads may be wound on the perforated drum of a high-speed centrifugal machine, and the caustic soda solution may be introduced through an axial perforated pipe; after some two minutes water is substituted for the caustic soda solution, and finally the threads are rinsed in acid and dried under tension. Or the skeins, impregnated with caustic soda, are introduced into the centrifugal drum and sprinkled for some minutes with caustic soda solution while the apparatus is in operation, then with water, then, if necessary, with acid, and afterwards with water; drying under tension follows.

In this manner the cellulose form, it is said, becomes more transparent, clear, stronger, and more elastic. These enhanced properties are retained if, after the alkali treatment, the form is treated by acid or another suitable solvent to extract the whole or a part of its copper.

The duration of the treatment with the alkali is determined by the thickness of the form, as the thicker it is, the longer it resists penetration by the alkali.

1. E.P. 1745, 1905.

2. E.P. 6557, 1899, prepares the cellulose for solution by treating for twelve to eighteen hours in a bleaching bath corresponding to 15 gm. "chloride of lime" per l.; E.P. 6735, 1899, dries the formed filament below 40° in a vacuum; while E.P. 20630, 1899, describes a method of removing water from the threads by first dipping the threads or films into hot water or steam to render them porous, and then drying as in previously mentioned process. This method of drying after immersion in hot water or steam is based upon the observation that the drying process takes place in two distinct steps, the first being upon the removal of the mechanically held moisture, and takes place comparatively rapidly. The second step in evaporation takes place very slowly, explainable on the supposition that this moisture is chemically combined with the cellulose. The object of submerging partially dried cellulose in hot water is to break up the loose chemical union between water and cellulose, the process of drying, it is claimed, being then effected in one-quarter of the time which would otherwise be required.

The process is claimed to be particularly applicable for making thick, highly elastic, transparent, and unusually strong threads and films, such as artificial horsehair, embroidery threads, and photographic films. The threads, after carbonization, serve as electric-light filaments, and the carbonized films for telephonic purposes. To avoid deformation, the forms made according to this invention must be dried under tension, but preferably at the ordinary temperature. The decomposition of the cuprammonium by the dilute acid used as the coagulating medium for the formed filaments, changes the copper into a salt, usually the sulphate. Ammonium sulphate is also present, the method of recovery of the copper depending on the disposition to be made of the ammonia. Perhaps the simplest way is to deposit the copper upon loose thin sheets of iron laid in the solution, an amount of iron being dissolved corresponding to the quantity of copper precipitated. The separated copper requires but careful washing, to be reused after solution in sulphuric acid, or the fine copper may be directly dissolved in ammonia. To recover both ammonium sulphate and copper, the liquid is neutralized with ammonia, thus forming ammonium and copper sulphates. By addition now of more ammonia, cupric hydroxide separates and all the copper may thus be precipitated and immediately used. The solution of ammonium sulphate is most economically utilized direct as a fertilizer, being too dilute to evaporate to dryness and recover the solid salt.

R. Linkmeyer has solved many of the problems connected with the production of cuprammonium cellulose filaments, his method being to first immerse the cellulose in a weak bath of ammoniacal cupric oxide in order to induce superficial swelling of the cotton fibers and the deposition of metallic copper thereon,[1] the active solution being effected in a subsequent and concentrated solution of copper in ammonia. In this manner is obtained sufficient cellulose dissolved in a unit volume of fluid to give the viscosity advantageous for spinning.[2] The process may be applied commercially as follows: Seven gm. cotton, freed from grease and bleached, are placed in 150–180 cc. of ammoniacal copper oxide solution containing about 12 gm. copper and 90 gm. ammonia per l. and to which there has previously been added, 6 cc. caustic soda solution of 40–50° Bé. After remaining

1. U.S.P. 795526, 1905; E.P. 4755, 4761, 1905; F.P. 346722, 1904; 353187, 356402, 1905.

2. The first bath serves to soften, swell and disintegrate to some extent the fibers and to fix upon them the oxide of copper dissolved by the ammonia. The fibers then dissolve speedily and readily in a concentrated solution of ammoniacal copper oxide. By proceeding in this manner it is claimed the conversion of the cellulose into oxycellulose or the hydration of the fibers is avoided. Further, the success of the solution depends less upon the temperature than upon the other processes. Solution takes place as well at 10–15° as at a lower temperature.

for 2–3 hours in this bath, the fibrous material is removed and freed from excess of liquid by pressure and then dissolved in 100 gm. ammoniacal cupric oxide containing 16–18 gm. copper and 200 gm. ammonia per l. In this manner a viscous solution is obtained which may be diluted with water, and after careful filtration is ready for conversion into filaments. In order to decrease the fragility of threads spun into a dilute sulphuric acid coagulating medium Linkmeyer has observed [1] that the weakening of the filament appears to be due to the fact that a large part of the ammonia becomes free in the solution after the cellulose has been dissolved. In order to overcome this weakening tendency a portion of the ammonia in the cellulose solution is removed by a vacuum before the filaments are formed. By this previous extraction of uncombined ammonia, dilute sulphuric or other mineral acid may be used as the coagulant and copper solvent without seriously affecting the tensile strength of the finished filament. In order to increase the brilliancy of the threads, the following method of operating is advocated: [2] the solution from which the free ammonia

1. U.S.P. 839013, 839014, 1906; E.P. 4746, 4765, 6356, 1905; 3549, 1906; F.P. 347960, 1904; 352528, 357837, 361061, 1905; D.R.P. 183557, 1904.

2. Linkmeyer and M. Pollak, U.S.P. 842568, 1906; E.P. 1501, 1905; F.P. 350888, 1905. Whatever liquid is employed for the precipitation, the thread obtained generally lacks strength, especially in the moist condition. This remark is particularly applicable to threads obtained by precipitation in acetic acid or in a relatively concentrated acid of from 30–65%. The reason for this want of strength would appear to be due to a sort of decomposition produced by the presence of free ammonia in the solutions before the precipitation or in the coagulated threads at the moment at which they are to be submitted to the acid washing. When fixed alkalis are employed for effecting the precipitation, the threads obtained present an opaque appearance, which is apparently likewise attributable to the effects of this decomposition, and it is probably owing to this opacity that the employment of alkaline liquids for the precipitation has not become general, because it had already been noticed that they produced stronger threads. This peculiarity has been utilized in the manufacture of a kind of felt, E.P. 3164, 1899.

If soda or potash lyes are employed for the precipitation bath Linkmeyer claims merely a coagulation is produced, part of the ammonia passing into the precipitation bath, and after the washing of the threads with acid it is found that they are stronger than those precipitated in acids. If, however, immediately after leaving the precipitation bath the ammonia still contained in the threads is eliminated as completely as possible before freeing them from the oxide of copper that they still contain by a washing with dilute acid, their strength will be largely increased and the decomposition referred to above will not take place.

The elimination of the copper by washing is effected particularly readily when the oxide of copper has been converted into a salt dissolving readily in acids—for example, into copper carbonate.

In order to eliminate the ammonia from the freshly formed threads, they may be treated by means of air, which produces the evaporation of the ammonia and precipitates the copper as hydroxide, a portion of which is then converted into carbonate by the carbonic acid in the air. For example, the threads are wound upon a cylinder arranged outside the precipitation bath, which may be perforated and arranged in such a manner as to permit an injection or suction of air through the layers of thread. When the threads have been precipitated in a soda lye, for example, they leave it with a blue and transparent appearance, and by means of the treatment described above they gradually assume a pale blue tint and become opaque, and when their appearance no longer undergoes modification

has been withdrawn as described above, is caused to pass through small apertures into acid diluted to such a degree that it is not capable of instantly combining with the salts in the cupric solution, for example, sulphuric acid of 2–15% strength. Then the threads obtained are passed directly into caustic soda solution of 25–35° Bé. strength. After rinsing in water to free from caustic, the threads are run into an excess of 5% sulphuric acid, agitated therein until neutral, rinsed and dried. If the threads are stretched to the extent of 1·5–1·25 of their length during the drying process[1] the brilliancy is also materially enhanced. If the stretching be done in the acid bath[2] the tension may be released during drying without the threads returning to their original length. In another differentiation[3] the threads are squirted into a gaseous atmosphere which is saturated with an atomized coagulant, by means of mechanical humidifiers, as of the Drosophor type. Linkmeyer has found[4] that it is possible to extract from an ammoniacal cupric-cellulose solution a large part of its ammonia without a precipitation of the dissolved cellulose taking place, this extraction being best effected by vacuum suction, and agitating the mass to facilitate liberation of ammonia gas.[5] In distinction from those processes in which the whole of the ammonia has been left in the solution of cellulose in order to subsequently precipitate it in the form of a salt corresponding to the acid employed, vacuum recovery permits of a considerable portion of the ammonia being regained in a form immediately available for reuse.[6] After the elimination of the uncombined ammonia the cellulose is precipitated by the addition of water, and they are in the most favorable state for being submitted to washing with dilute acids, which imparts to them the transparency of glass and removes their coloration.

1. F.P. 350889, 1905. The process of H. Bernstein (U.S.P. 960791, 1910) apparently contains nothing new.

2. E.P. 16088, 1906.

3. D.R.P. 185139, 1904.

4. U.S.P. 842568, 852126, 1907; see also U.S.P. 945559, 1910; E.P. 4104, 1909; abst. J.S.C.I., 1909, **28**, 934.

5. The exactness of the assumption that a portion of the ammonia is liberated as a result of the dissolution of the cellulose would appear to be demonstrated by the fact that if in a very complete vacuum a bath of ammoniacal oxide of copper is freed from all the ammonia not combined with the oxide of copper, cellulose then being dissolved therein, it is found, upon re-establishing the vacuum above the bath that large quantities of ammonia gas are again liberated.

6. In order to dissolve 1000 gm. cellulose from 3,000–4,000 gm. ammonia are required, and as the result of evaporation and other losses, there are used about 4,500 gm. ammonia per k. finished thread. It thus becomes evident that processes for ammonia recovery have a relatively high value. To still further reduce the cost of production, Linkmeyer (D.R.P. 206883, 1907; U.S.P. 962769, 1910; abst. J.S.C.I., 1909, **28**, 362) replaces part or the whole of the alkali hydroxides used as the coagulating media by alkali or alkaline earth chlorides, it having been found that the latter can take the place of the more expensive former, when a small amount of sodium or potassium hydroxide is also added to increase the power of coagulation. In addition it has been observed that the structures coagulated in this manner have the same properties as those which have been coagulated in pure soda lye. In practice, about 28 k. sodium chloride are dissolved in 100 l. water, and 3·5 k. of sodium "oxidehydrate" added to the solution thus obtained. The whole

bined ammonia, the threads are formed as described above. The method of drying preferred is shown in Fig. 138, 1 being a plan view, and 2 a sectional view on line 2,2. The threads are wound on the

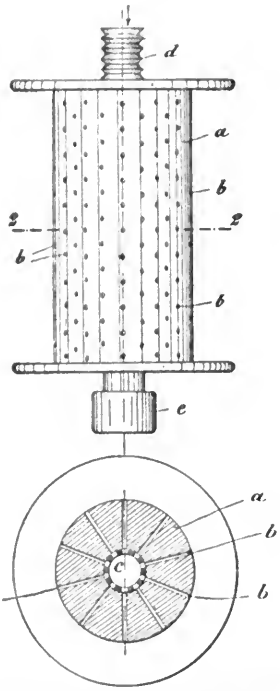

Fig. 138.—Linkmeyer Process for Manufacturing Glossy Cellulose Threads.

Fig. 139.—The Thiele Artificial Silk Spinning Apparatus.

cylinder *a*, *b* are radial holes, and *c* a central opening into which is fitted a pipe *d*, perforated with corresponding holes, one end being closed

mixture is then boiled and used while still hot. The incorporation of carbohydrates is proposed (U.S.P. 962770, 1910; E.P. 14112, 1909; abst. J.S.C.I., 1910, 29, 622) to increase the stability of the ammoniacal copper oxide solutions of cellulose, mannite, cane sugar or gums being recommended. For example, 400 gm. copper sulphate are dissolved in water and mixed with 240 cc. caustic soda solution of 38° Bé. strength, also diluted with water. Then 20 gm. dextrin, cane sugar or mannite dissolved in water are added. In this solution is submerged 200 gm. finely cut cotton fiber, which is afterward pressed out by a filter, the pulp containing the cupric hydroxide together with the organic substances added. This mass is then dissolved in 1000 cc. ammonia, sp.gr. 0.910. Either simultaneously with the addition of the ammonia or soon thereafter a further amount of carbohydrate may be added if necessary. The patentee claims this method produces perfectly homogeneous solutions for artificial filament production. H. Bernstein uses sugar (U.S.P. 965273, 1910) or molasses (U.S.P. 965557, 1910) for the same purpose, while V. Mertz (U.S.P. 954984, 1910) stabilizes the cuprammonium solution by the addition of sodium potassium tartrate, 1%, and glycerol, or ammonium persulphate 1-2%. Potassium or ammonium permanganate or ammonium perchlorate may also be used.

by the stopper *e*. Air injected or exhausted through the pipe *d* passes through, and dries the layers of thread wound upon the cylinder *a*.

" Cellulo " Silk is the commercial name which has been applied to the artificial filament originally developed by E. Thiele, and more recently with the assistance of W. Dreaper, and which is a modified copper-ammonia process. The apparatus (Fig. 139) for the manufacture of artificial silk according to Thiele [1] is characterized by the formation of the thread being effected in a freely suspended column of liquid—supported in a vessel only by the pressure of the air, the vessel being provided with a narrow opening in the bottom. The effect of this arrangement is that the precipitation bath can be under a low pressure, which can be varied, as desired, accordingly as the column of liquid is higher or lower and according to the speed at which the precipitation bath flows through, the passage of the thread through the opening being thus greatly facilitated by the low pressure. Moreover, this invention enables the thread which sinks down in the bath to be removed without the necessity of altering the direction of the thread, as must be done in those spinning vessels, which are closed at the bottom. This reversal of the direction of the thread, however, as is practiced in the ordinary spinning vessels by means of guide rollers, elbow pipes, and the like, often involves breaking of the thread and prevents the detached and falling ends of the fibers from being rejoined to the body of the thread. This disadvantage is in a measure obviated by the present invention, as the threads after running through the suspended column of liquid pass immediately outside the bath without alteration in their direction, and can be further treated—such, for example, as being wound up.

The spinning liquid enters through the rose or nozzle *a* in " thread form." The threads formed run through the funnel *b*, which is closed at the top and open at the bottom, and the funnel or delivery pipe *d*, flexibly attached by the hose coupling *c*, and are set by means of the precipitating bath contained therein. In order to renew the precipitation bath and insure a better production of threads, fresh precipitation liquid is admitted slowly through the supply pipe *e* and discharged again through the opening at the bottom of the funnel pipe *d*.

In winding the threads on the rotary drum *f* the funnel pipe *d*, which is flexibly connected with the spinning funnel, enables the threads to be slowly moved to and fro over the drum, and thus uni-

1. U.S.P. 750502, 1904; F.P. 334507, 1903. Letters Patent in Germany, dated Dec. 24, 1902, and for a design patent in Germany, dated Jan. 15, 1903, and for Letters Patent in Belgium, dated Aug. 8, 1903; in England, dated July 28, 1903; in Italy, dated Aug. 10, 1903; in Austria, dated Aug. 6, 1903; in Sweden, dated July 30, 1903, and in Switzerland, dated July 30, 1903.

formly distributed thereon. In Fig. 140 at 1 numerous filaments issue from the perforated rose-like end of the tube *a* and are considerably extended by their own gravity in passing down through the tube *b*, filled with slowly acting precipitating liquid. They are then led through the narrow connecting passage *c* into the tube *d*, which is filled with rapidly acting precipitating liquid, and after leaving *d* they are wound up in the usual way, scoured, and washed. The passage of the filaments is indicated by dotted lines on the drawings. The tubes *b* and *d* are provided with supply and discharge pipes *e f g h* for discharging the precipitating liquids when they have been rendered inefficient after long use, and replacing them with fresh liquids. For enabling the tubes *b d* to be cooled or heated, as may be required, they are surrounded by jackets *i k*, through which a cooling or heating fluid is made to circulate.

In the arrangement at 2 the filaments issue from the tubes *ll* and pass through the vessel *m*, filled with slowly acting precipitating liquid, into the vessel *n*, filled with the same liquid, and are wound up on the roller *o*, and while on this they are successively treated with the rapidly acting precipitating liquid, with acid, and with water. For stretching the issuing filaments in the tube *m* there is provided between the tube *m* and tank *n* a fluid motor *q*, operating as a propeller, which drives the liquid energetically in the direction of the issue of the filaments through the tube *m*, and thereby draws out the comparatively thick filaments to any desired degree of fineness. Thiele[1] produced fine filaments by allowing the solutions to issue from orifices of comparatively large diameter (about 0.5 mm.), the principle being applied of reducing the diameter of the filament by rapidly drawing them away from the mouth of the orifice before they are fully dehydrated. To obtain the requisite plasticity of the cellulose threads, the orifice is caused to discharge directly into a bath of feeble precipitating power, and when the filaments are sufficiently attenuated they are fully dehydrated by passing into a more con-

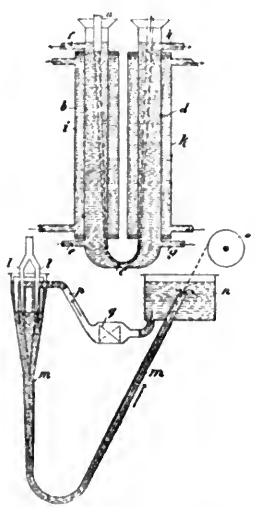

FIG. 140.—The Thiele Spinning Apparatus, Showing the Method of Winding the Filaments.

1. Thiele: U.S.P. 710819, 1902; E.P. 8083, 1902; F.P. 320146, 1902; abst. J.S.C.I., 1901, **20**, 1393; 1902, **21**, 25, 550. See Thiele, Mon. Text. Ind., 1897, **12**, 331; Ind. Text., 1897, **13**, 148; Text. Col., 1897, **19**, 109; Färb. Ztg., 1897, **33**, 117; Muster. Ztg., 1897, **46**, 501; Text. Mfr., 1897, **23**, 235.

centrated coagulating solution. The coagulating bath[1] is cold NaOH of 39° Bé. strength, or a hot solution of greater dilution. In the subsequent stretching of the filaments, in order to obviate the danger of the threads sticking together during the progress of precipitation, the thread is either allowed to fall through a sufficient depth of the precipitating fluid or taken up by a suitable winding apparatus.[2] By means of this stretching, it is claimed that a high, silky sheen is produced. The gradual coagulation of the cuprammoniacal cellulose filament can best be accomplished, according to W. Dreaper,[3] as follows: In the long outer tube, into which the jet of cellulose solution is discharged, a shorter, inner tube is introduced, which surrounds the jet and extends for a short distance along the path of the thread. The more dilute solution of the precipitant enters this inner tube above the jets by a supply pipe, and thus a fresh solution of constant strength is kept in contact with the newly formed thread. The more concentrated solution of the precipitating reagent is introduced into the upper end of the outer tube and flows in the same direction as the more dilute solution, with which it gradually mixes. He claims that best filaments of cuprammonium cellulose solutions are to be obtained[4] by the addition of organic substances which materially increase the viscosity of the solution. For example a 10% solution of glucose containing 10% of sodium hydroxide may be used for spinning with a 10–12% solution of cellulose. The temperature of the precipitating bath may be raised even up to 70°. Where such a bath is used, the cellulose or hydrocellulose is dissolved in aqueous solutions containing either zinc chloride or copper carbonate dissolved in ammonia.

In the English works of this process at Great Yarmouth it is said[5] yarn is being produced of a fineness of 35 denier or even lower, and in spite of its relative fineness, the number of filaments is claimed to be greatly in excess of that of other makes which are on the market at the present time.

R. Langhans has proposed to spin solutions of cellulose in sul-

1. Thiele; D.R.P. 173628, 1902, Addition to D.R.P. 154507, 1901; D.R.P. 157157, 1901; abst. Chem. Centr., 1905, **1**, 576; E.P. 15133, 16078, 1906; abst. J.S.C.I., 1906, **25**, 924; F.P. 367979, 367980, 1906; abst. J.S.C.I., 1906, **25**, 1144; U.S.P. 838758, 1906; abst. J.S.C.I., 1907, **26**, 197.

2. Thiele and R. Linkmeyer. E.P. 16088, 1905; D.R.P. 179772, 1905.

3. E.P. 13868, 1907; see also E.P. 27222, 1905.

4. E.P. 20316, 1908; difficulty is experienced in the weaving in those composite artificial silk threads in fine counts where the thread is in a condition similar to that of "boiled off" silk. To remedy this, according to Dreaper (E.P. 11959, 1908), the threads are dried at such a tension that in the final state of the yarn the filaments stick together as in "raw" silk. In order to improve the state of the thread, it may be dried out of a solution of soluble oil or other suitable colloid.

5. Dreaper, J.S.C.I., 1909, **28**, 1299.

phuric and phosphoric acids,[1] for which purpose cellulose is first subjected to a "purifying process" by first treating with an alkali and then with aqueous hydrochloric or sulphuric acids, afterwards washing with water until neutral, and finally drying at about 40°. The cellulose is next impregnated with a solution consisting of aqueous phosphoric acid, containing 33% of phosphorous pentoxide, and sufficient sulphuric acid so that the combined solutions contain 20% H_2SO_4, using only enough to impregnate the cellulose, which is allowed to act until the fibers begin to swell and pass into solution. The mass is then kneaded with sulphuric acid, and phosphoric acid added, when the dough is said to be transformed into a glass-like, transparent, viscid syrup, suitable for filament formation. It appears that but little commercial use has been made of this process.

Work of E. Crumière on ammonio-cupric cellulose commences in 1906, in which year he published a method[2] of treating cellulose in the manufacture of artificial silk by the action of ozone or ozonized air in conjunction with a solution of caustic soda or potash. Thus treated, it is stated, the cellulose rapidly dissolves in cuproammoniacal solution, thus giving a fluid of consistency for the manufacture of threads.[3] In order to remove all traces of copper from the coagulated cellulose[4] the material is placed in a vat which contains a liquid capable of dissolving copper, such as, for example, dilute sulphuric or acetic acid. An electric current is then passed between two suitable metallic electrodes which are immersed in this liquid. The vat itself can be used as the cathode. The copper contained in the cellulose is dissolved and then deposited on the cathode. For the purpose of this treatment the coagulated cellulose may be either wound on bobbins or arranged in the form of hanks.

The filaments, after formation, are coagulated by passing into a bath of potassium or sodium zincate prepared by adding sodium or potassium hydroxide to a zinc salt until the precipitate first formed just dissolves.[5] The copper remaining in the coagulated cellulose may be eliminated[6] by passing an electric current through a solvent in which the coagulated cellulose is immersed in such a manner as to dissolve the copper and deposit it on the cathode.

1. U.S.P. 571530, 1896; D.R.P. 72572, 1891; 82857, 1893; F.P. 217557, 1891; Text. Col., 1897, **19**, 317; Ind. Text., 1897, **13**, 239.

2. F.P. 361048, 1905; E.P. 22422, 1906; U.S.P. 908754, 1909.

3. It is recommended to add metallic copper to the ammoniacal solvent, for the purpose of reacting with the ammonia liberated, and of replacing in it the "copper" absorbed by the cellulose during the first stages of its action upon the latter.

4. F.P. 377118, 1907, and First Addition thereto, dated Mar. 17, 1908; abst. J.S.C.I., 1907, **26**, 1045. See also F.P. 415003, 1910.

5. F.P. 375827, 1907. 6. E.P. 2794, 1908.

Ernst Friedrich [1] claims that by using an alkylamine as solvent for copper hydroxide instead of ammonia, it is possible to obtain more concentrated solutions of cellulose, and that the solutions so obtained are more viscous and less liable to deterioration on standing. It is stated that the coagulation is done very quickly, the resulting filament being so resilient that broken threads rarely occur, and that the thread, therefore, may be wound up with a high speed, and finally can be very easily washed, owing to the high solubility of the alkylamine in water. The process is carried out by dissolving cupric oxide alkylamine with cellulose in the following manner: 320 gm. of well-cleaned cellulose is moistened with hot water, pressed, and while still wet mercerized with 3,400 cc. NaOH, of 30° Bé. strength. The mercerization being finished, 250 gm. powdered copper sulphate is added gradually, the sodium sulphate formed by interaction separated by filtration, and the wet mass remaining triturated with a 30% solution of monomethylamine or monoethylamine in water, any elevation in temperature being avoided. The mass first gelatinizes and later dissolves. The alkylamines resulting from beet-sugar and molasses manufacture are claimed to be applicable and are readily procurable in large amounts. The solution is spun in the ordinary way.

In a subsequent process [2] the preparation of a solution of cellulose is described in which much less ammonia (about one-half) is required than hitherto was considered necessary.[3] Best results are obtained [4] with cellulose compounds prepared by subjecting cellulose to the action of either an oxidizing agent, caustic soda, or an acid (sulphuric acid of 50° Bé.).

The work of E. Friedrich above is not to be confused with that of Philipp Friedrich, the latter having devised a process [5] in which

1. U.S.P. 813878, 1906; F.P. 357171, 357172, 1905; E.P. 17381, 1905; 6072, 1906; abst. J.S.C.I., 1906, **25**, 88.

2. U.S.P. 850571, 1907; E.P. 27727, 1906.

3. The following example illustrates the invention: Basic copper sulphate is precipitated upon 50 gm. of hydrated cellulose by mixing hydrated cellulose, copper sulphate, and caustic potash in the proportions represented by the formula:

$$3C_6H_{10}O_5 : 4CuSO_4 \cdot 5H_2O : 6KOH.$$

The cellulose thus prepared is divided into four equal portions. Of these one is dissolved in 250 cc. of ammonia solution of sp.gr. 18° to 20° Bé. To the solution thus obtained the other three portions are added little by little, and at the same time there is added in all 250 cc. of the same solution of ammonia distributed between the separate portions of cellulose, the portion of ammonia solution added being more strongly diluted with water for each successive portion of cellulose and the total quantity of water added being sufficient to bring the total volume of the liquid to one liter. It is necessary to observe that the proportion of water to solution of ammonia in the last portion added should be 1:1 to 1:¾, because if a more dilute solution of ammonia were used coagulation might ensue. The solution thus obtained is filtered, for which purpose a metal gauze having 160–180 meshes to the centimeter will suffice.

4. F.P. 364066, 1906.

5 D.R.P. 206883, 1907.

solutions containing 6% of cellulose are forced through suitable orifices into a coagulating bath consisting of 25 k. sodium chloride and 4.5 k. sodium hydroxide in 100 l. of warmed water. In a subsequent method[1] aluminum, calcium and magnesium chlorides are advocated as preferable precipitants to sodium chloride and hydroxides.

Animal Silk is the generic name given to certain gelatin, glue and casein compounds, which more nearly approach the term "Artificial Silk" than the foregoing, inasmuch as they are—like natural silk—structureless, of animal origin, and can be transformed directly from a fluid to solid state without the use of a coagulating medum other than air. They differ from natural silk, however, in being less brilliant and much weaker when wetted, and also have the disagreeable property of swelling in moist atmosphere from absorption of water, and possess a comparatively high degree of brittleness. Gelatin silks dissolve rapidly in acids and alkali hydroxides, and on calcining—like natural silk—burn with characteristic odor of burnt feathers or horn, and the evolution of alkaline vapors; cellulose silks burn without odor, and with the evolution of acid vapors. Like the natural fiber, the fiber of cellulose silk swells in contact with

1. E. P. 17967, 1908; 7617, 11700, 14112, 28256, 1909; F.P. 404372, 1909, and First Addition thereto, dated Mar. 23, 1909; abst. J.S.C.I., 1909, **28**, 1246. According to his E.P. 4104, 1909 (abst. J.S.C.I., 1909, **28**, 934) carbohydrates or gums were added to the solutions of cellulose. Solutions having the same properties can be more directly obtained by preparing the cellulose solutions from those plants which contain both carbohydrates and cellulose. The outside layers of the rice plant, it is claimed, give good results if they are first treated with alkalis and then bleached and washed before being dissolved in the cuprammonium solution. Mannitol (E.P. 14112, 1909) is said to improve the keeping properties of a cuprammonium solution. In a subsequent patent (F.P. 409789, 1910; E.P. 28259, 1909) he manufactures artificial threads using cuprammonium cellulose solutions of great tenacity, as, for example, those containing, in addition to cellulose, such substances as carbohydrates or alcohols, as described in F.P. 400321 (E.P. 4104, 1909), and addition thereto (J.S.C.I., 1909, **28**, 934, 1121) and F.P. 404372 (E.P. 11700, 1909; J.S.C.I., 1909, **28**, 1246), filaments squirted in the usual manner may be drawn out into very fine threads and hardened in a single coagulating bath, preferably of the kind described in D.R.P. 206883 (abst. J.S.C.I., 1909, **28**, 362). The cellulose solution should contain a smaller quantity of ammonia than of cellulose, and it should have such a tenacity that it can be drawn into filaments 50 cm. long in the air; the concentration of the coagulating bath should be so adjusted that the filament can be drawn out without breaking during the first 10 cm. of its passage through the bath.

He prepares (F.P. 410882, 1909) a hydrated basic copper salt intended specially for the solution of cellulose, having found that in the precipitation of copper as hydrated oxide, a certain amount of alkali carbonate is introduced; this gives a product, by means of which the solution of cellulose can be readily effected with very little ammonia. For example, to 370 gm. of powdered crystallized copper sulphate, dissolved in 2 l. of water, are added, 130 cc. of sodium hydroxide solution (40° Bé.), diluted with 1500 cc. of water; 25 gm. of sodium bicarbonate, dissolved in water, are next introduced and then a further 45 cc. of sodium hydroxide (undiluted). The precipitate is mixed with 200 gm. of finely divided cellulose, and the mixture, pressed as dry as possible, worked into a homogeneous pulp with 600 cc. of ammonia (sp.gr. 0.888). On adding 48 cc. of sodium hydroxide solution the whole immediately dissolves, forming a viscous solution, said to be very suitable for the manufacture of artificial silk.

water, but, on the contrary, contracts in alcohol or glycerol. With Fehling's solution the fiber is colored a violet, iodine and sulphuric acid yield a yellow or brown, chloriodide of zinc a yellow, and Vetillard's reagent a red coloration which disappears on washing.

Vandura Silk is obtained by the use of gelatin as a basis, which is rendered insoluble after being formed into filaments by exposure to formaldehyde vapor, and was so named by the patentee, the late A. Millar. A concentrated solution of gelatin is first prepared, carefully clarified from insoluble albuminous particles, melted by heat, and forced through spinnerets on to an endless traveling band, sufficiently long to permit of thorough drying of the threads. The latter then pass into a closed chamber where they are subjected to the action of dry formaldehyde vapor.[1] The process of Hummel of Leeds, is essentially the same. On account of the partial solubility of the formaldehyde gelatin in water, it cannot be dyed after formation into threads, but must be colored in the melted state before spinning. The wool and silk acid dyes are suitable for dyeing gelatin.[2] The brittleness may be partially overcome by the introduction of 5–20% castor oil, glycerol, or similar softening agent. In the process of L. Jannin [3] gelatin 1 k. in water 1 k. and glycerol 100 gm., containing

1. Millar describes his process as follows (U.S.P. 594888, 1897; 625345, 1899; 611814, 1898; E.P. 15522, 1894; 2713, 1897; 6700, 1898; D.R.P. 88225, 1895; 93795, 1897; Sw.P. 12728, 1896; 18042; F.P. 248830, 1895): Four lb. of the best gelatin is broken up into granular pieces such as will pass through a 16 mesh sieve. It is then placed in a melting vessel with 2 lb. of cold water added, stirred well and left to stand for one hour. The vessel is next placed in a can of hot water and kept heated for another hour, stirring once or twice. By the end of the second hour the solution of gelatin is of uniform consistency, containing 66% of gelatin.

The group of filaments are next twisted together and spread out in a thin layer on an open metal reel, about a foot in diameter. A number of these reels of plain gelatin yarn are now placed in a chamber in which a very small quantity of formaldehyde has been poured, and is therefore filled with formalin vapor—about 80 minims of formalin to a space of 10 cubic feet. An exposure to this vapor at ordinary temperature completely changes the gelatin. It is no longer soluble, even in boiling water, and has a splendid luster.

The reels are hung up to allow all smell of the formalin to disappear, and the artificial silk is finished, needing only to be wound on bobbins for the convenience of handling before it gets into the hands of the textile manufacturer.

The nipples of the machine had a bore of 0.01 inch, but the filaments drawn from these nipples may be only 0.001 inch in diameter. The flow of the liquid through the nipples is regulated by air pressure. An India rubber pipe leads from a receiver of compressed air, and has its other end attached to a small pipe fixed to the air-tight cover of the cylinder which contains the gelatin solution. The endless traveling band, on which the threads fall, and by which they are drawn away rapidly, moves at a uniform rate—say 60 yards per second; but if the speed be increased to 120 yards, the filament would be twice the fineness; the same result is obtained by reducing the pressure in the air receiver or reservoir. See also C. Miller, J.S.C.I., 1900, **19**, 326.

2. H. L. Chavassieu (F.P. 395402, 1907, and First Addition thereto, dated Nov. 28, 1908) renders the filaments more supple and elastic by treating them with 2–5% solutions of quinone or quinol (hydroquinone).

3. F.P. 342112, 1904; see C. Dye, D.R.P. 106293, 1898, for a similar process.

1–2 gm. formaldehyde per liter, is forced through spinnerets at 80–100°, and afterwards into a mixture of alcohol or acetone and formaldehyde to harden the fibers. In order to more closely approximate the appearance and composition of real silk, H. Bernstein has patented the novel process[1] of utilizing with the gelatin the liquor resulting from the treatment or boiling of raw silk, it being claimed that the final product obtained is more pliable, elastic, and lustrous, and does not shrink or shrivel as readily from moisture or other atmospheric changes.[2]

Bichromate Silk is similar to Vandura Silk, with the exception that the glue or gelatin, instead of being rendered insoluble by the action of formaldehyde, is treated with potassium bichromate with subsequent exposure to light, whereby the gelatin takes on a light-green color from the reduction of bichromate to normal chromate, and at the same time becomes nearly insoluble in water. Bichromate equal to about 2% of the weight of the gelatin is used. Sodium bichromate, on account of more ready solubility in water, has been considered as preferable by some. A. Helbronner and E. Vallee[3] have described a process of producing textile threads by treating ossein obtained from bones by digestion with dilute alkali and forcing this solution into filaments. M. Gérard[4] combined 5 parts of 30% gelatin (in acetic acid) with 10 parts of 30% nitrocellulose in the same solvent, producing threads which have, as yet, reached no industrial importance.

Casein Silk, or the artificial fibers formed from the coagulable portions of milk, were first described by F. Todtenhaupt[5] in his E.P. 25296 of 1904. The casein is first dissolved in an alkali solution, which is then passed through forming nozzles into a dilute acid bath; the threads thus formed are stated to be insoluble and very tough,

1. U.S.P. 712756, 1902; 798868, 1905; in which he takes 6½ parts of gelatin and 3 parts of the liquor resulting from boiling raw silk. These in cold condition are placed in a suitable tank for about two hours, and stirred, so as to be thoroughly mixed. The resultant body is then introduced into another vessel and subjected to heat of about 50° for an hour, after which the mass is placed in an air-tight vessel provided with nozzles or orifices and subjected to pressure, whereby it is forced through the nozzles in the form of filaments, which, drying rapidly, are twisted into threads and wound on bobbins or formed into skeins. These are now subjected to the vapor of formaldehyde in order to render the material insoluble, after which it is ready for use.

2. The composition for manufacturing artificial silk of H. Turk (U.S.P. 563214, 1896) consists of nitrocellulose 96, gelatin or isinglass 2, dissolved in glacial acetic acid, 1,600 (all parts by weight).

3. E.P. 20548, 1908; Hüscher (D.R.P. 179833, 1907) also employs ossein for the same purpose.

4. D.R.P. 40373, 1886.

5. Todtenhaupt, D.R.P. 203820, 1907; Addition to D.R.P. 170051; F.P. 356404, 1905.

and to contain 15–16% nitrogen. The alkaline casein solution is prepared by dissolving 1 part of casein in 3 parts 10% aqueous ammonia and 4 parts water. The fibers obtained by this process, however, contain so much water that they readily adhere together, which has been obviated in a subsequent process [1] by employing pure casein, which dissolves in water to a fairly clear solution. This is converted into a thick solution by dissolving in alcohol 80 and water 20 (parts) in the presence of traces of bases or salts. The solutions thus formed are said to contain 1 part of casein to 1.5 parts of solvent, and to be sufficiently viscous to form into threads which do not adhere, and without the necessity of precipitation by acids. Solutions of the casein in zinc chloride,[2] methyl alcohol,[3] and formaldehyde [4] have been advocated as precipitating agents. O. Nowak [5] dissolves the casein by aid of 5% of dioxynaphthylmethane, and H. du Boistesselin and C. Gay [6] by excess of soda lye. H. Cathelineau and A. Fleury [7] dissolve the casein in a phenol (e.g., carbolic acid, creosote or guaiacol) and then add cellulose nitrate before spinning.

In the process of H. Timpe [8] casein or paracasein is dissolved in an alkali (either ammonia or caustic soda), acetone is added, and the mixture heated until frothing commences. After standing for some time the precipitate formed is removed, and the liquid evaporated, which soon sets to a solid mass upon cooling. This is rendered plastic on heating, and in this condition is worked into threads which are rendered insoluble by treatment with formaldehyde vapor. In still another method,[9] an acetic acid solution of casein is given the requisite viscosity for spinning into filaments, by incorporating a glacial acetic acid solution of nitrocellulose. Gelatin and casein have been combined as in the process of Foret.[10]

The spinning processes described do not differ essentially from those used to form filaments of nitrocellulose. It appears that the same defects in the filaments noted under gelatin and glue silks are present with casein filaments, and so far as the author is aware, these products are not commercial articles at the present time.[11]

1. Todtenhaupt, D.R.P. 203820, 1907; Addition to D.R.P. 170051; F.P. 356404, 1905.
2. Ibid., F.P. 356504, 1905: abst. J.S.C.I., 1905, **24**, 1063.
3. Ibid., D.R.P. 183317, 1906.
4. Ibid., U.S.P. 836788, 1906.
5. U.S.P. 809371, 1906.
6. F.P. 403193, 1909.
7. D.R.P. 185240, 1906.
8. F.P. 356508, 1905.
9. Process of H. Dunham, U.S.P. 748709, 1904.
10. F.P. 361759, 1905
11. See also Casein Plastics.

Incandescent Electric-Light Filaments. Lane-Fox was probably the first person to patent (England) a carbon filament. He used "vulcanized fiber," which is cellulose partially parchmentized by zinc chloride and afterwards formed into shape mechanically. J. Swan [1] worked out the same idea quite independently, both with zinc chloride and parchmentizing by the aid of sulphuric acid. In the latter method the acid is first diluted with water to 1.64 sp.gr., the thread in very loose form being used. For ordinary 50 volt lamps, knitting cotton was found to be the best. The action of the acid is prolonged until the cotton appears gelatinized, and until a point is reached where, if the action is continued much longer, the cellulose would entirely disintegrate. If on the other hand the structure of the cotton is not sufficiently acted upon, the filament does not give uniform results. W. Crookes patented the use of Schweitzer's reagent, in which he proposed to dissolve cellulose in cuprammonium solution in a method similar to that described under "Glanzstoff". E. Weston of Newark, N. J., was the first to use pyroxylin in this industry, his patent being granted in 1882.[2] Weston first nitrated cotton and dissolved this in ether-alcohol, poured into shallow vessels to dry, after which the films were cut up into thin strips and denitrated. Weston's fluid cellulose nitrate solution, called "tamadine," was used in the patented method of J. Swan,[3] who forced the solution—often containing acetic acid—through small nozzles by compressed air into alcohol as the coagulating medium. E. Oberle [4] first prepared a 50% solution of thorium oxychloride in alcohol, which was subsequently mixed with a 3–20% solution of nitrocellulose in ether-alcohol if the thread was to be spun with air pressure.[5] The threads after formation, washing and drying are ignited in the air and after decomposition, the salts are changed into oxides by ignition in a Bunsen burner.

F. Wynne and L. Powell [6] used, in addition to the chlorides, bromides

1. E.P. 4933, 1880. See A. Parkes, E.P. 983, 1881; F.P. 144257, 1881; Belg. P. 55383, 1881; U.S.P. 257607, 1882.

2. U.S.P. 264987, 1882; E.P. 4458, 1882.

3. Fitz Gerald also patented in England the use of zinc chloride for carbon filaments, and J. Hoyne (U.S.P. 625033, 1899) the same in the United States. See E. Bronnert, E.P. 18260, 1899; F. Ahrens, D.R.P. 216629, 1907.

4. E.P. 3029, 1884 (abandoned). See J. Swinburne, London Electrician, 1887, **18**, 60, 98, 121, 187, 255, 286, 303, 323, 346, 368, 418, 462, 496, 539. In the patent of Wynne and Powell (E.P. 16805, 1885), zinc was dissolved in dilute HCl in the presence of an excess of zinc until effervescence ceased, zinc carbonate in excess being added to neutralize excess of hydrochloric acid, the liquid filtered and evaporated to a density of 1.8. When cotton cellulose was stirred in this liquid and heated to 100°, a homogeneous mass soon resulted. W. Dreaper converts cellulose into hydrocellulose (E.P. 858, 1908) and then dissolves the latter in zinc chloride.

5. E.P. 12056, 1896; abst. J.S.C.I., 1897, **16**, 603.

6. E.P. 16805, 1885, abst. J.S.C.I., 1886, **15**, 172. The oxychloride may be

and iodides of zinc or bismuth, precipitating the formed filament by alcohol, ether or acetic acid. O. Knöfler[1] succeeded in making from collodion endless impregnated threads, by charging the pyroxylin with salts of incandescent oxides, and operating in a manner similar to that used by Chardonnet in the formation of artificial filaments.[2] The pyroxylin solutions are usually denitrated with ammonium sulphide, ferrous sulphate or chloride or other reducing agent, the regenerated cellulose thus obtained being used for filaments as above. In addition to electric-light filaments, microphone carbons and the spider hairs in surveying instruments are obtained from this source.

Artificial Horsehair, Gorse, Whalebone, Hemp, Lint, and analogous fibers have been made from regenerated cellulose, and especially nitrocellulose. In the method for forming artificial whalebone patented by Knight[3] metal strips are coated with a mixture of nitrocellulose and India rubber, the resulting product, it is stated, being not liable to crack and split, as with the natural bone. In another method a plurality of bast fibers are coated with pyroxylin of high viscosity and then formed by mechanical means into a flattened

satisfactorily spun, the inventor claims, when as low as one-fourth part of nitrocellulose is present. The proportion of alcohol must exceed that of ether, it was found, if the thread is to be spun under water in a homogeneous solution, because ether precipitates thorium oxides or a basic salt. The spinning may be effected with either a weak or strong solution. In the former case the solution is passed through glass tubes with capillary openings immersed in water in which the alcohol and ether readily dissolve, the thread being dried in the air. In the latter case, the solution, consisting of 20% nitrocellulose and 80% thorium oxychloride dissolved in alcohol and ether, is passed under pressure into the open air.

1. E.P. 11038, 1895; abst. J.S.C.I., 1895, **14**, 797. For "cupricellulose incandescents," see A. Müller, Zeit. ang. Chem., 1906, **19**, 1810; Bruno, Ibid., p. 1387.

2. The collodion is mixed with an alcoholic solution of the salts to be employed or with the solid oxides of salts soluble in alcohol. After forcing the mixture through a series of capillary tubes, and the resulting filaments are coagulated by passage through a solvent which will dissolve the alcohol and ether of the pyroxlin solution without attacking the inorganic salts evenly distributed throughout the thread. Water is the simplest and cheapest fixing agent, which, if rendered alkaline, will immediately cause a coating of oxide to be formed on the thread, which will be thus protected from the solvent action of the water. Since the combustion of such threads is so energetic as to partially disrupt the filaments, they are first denitrated. If the filaments are to be used for incandescent mantles, they are woven as in the usual method of formation. Mantles woven from such impregnated pyroxylin filaments are much more durable than those woven from cotton threads and subsequently impregnated, the advantage accruing from the smaller percentage of ash in pyroxylin than in cotton which is very detrimental to the light-emissive power of the finished mantle. See P. Follet and G. Ditzler, D.R.P. 223294, 1907; addition to D.R.P. 211871, 1906; Hanauer Kunstseidefabrik, D.R.P. 222873, 1908; R. Pawlikowski, D.R.P. 222624, 1908. See Chapter X.

3. E.P. 1765, 1890; abst. J.S.C.I., 1891, **10**, 264. One of the disadvantages of natural horsehair when used in the arts, as for bordering, trimming, or embroidering, is that the shortness of the individual hairs requires that they be united or spliced, so as to form a continuous thread adapted for uninterrupted work.

strip, with a holder stitched or cemented on.[1] According to Müller[2] the incrusting substances of Mexican grass are first removed by boiling the grass for about two hours in 1–2% NaOH solution, being then washed and dried, after which they are superficially parchmentized by immersion in strong sulphuric acid or zinc chloride solution. By now coating these fibers with a pyroxylin solution, they are stated to assume a hair-like character, possessing great elasticity and strength, and to be especially adapted for the production of artificial whalebone.

The name "Artificial Horsehair" has been applied to those filaments of 300–400 deniers size, which, while resembling silk in appearance, are approximately of the diameter of natural horsehair. It is evident that by enlarging the spinneret apertures, larger filaments may be produced, but there is a well-defined limit, above which it is not advisable to produce a single thread. When the diameter of the thread exceeds a certain size, the volatilization of the contained solvents and the regeneration of cellulose in denitration do not proceed uniformly or satisfactorily. For the production of uniform threads of greater diameter, spinnerets with the maximum orifice to produce satisfactory threads are used, and a number of spinners are so placed that the filaments emerging from them touch before the contained solvent has had an opportunity to evaporate, the result being that the several filaments adhere and coalesce into one thread. In order to increase the adhesion, the filaments may be passed directly from the spinners into a weak acetone solution, which will sufficiently dissolve the nitrocellulose filaments to cause them to firmly adhere to each other. From this they are passed into a bath of water which removes the alcohol, ether and acetone, and finally the combined filament is dried and perhaps dyed. In this manner it is commercially practicable to produce individual hairs exceeding in diameter that of horsehair. In Lehner's method[3] the coalesced fibers are com-

1. For method of producing artificial hemp lint by artificial silk see Vereinigte Kunstseide- Fab. Akt.- Ges. Kelsterbach, D.R.P. 181510, 1906.

2. E.P. 3725, 1890; abst. J.S.C.I., 1891, **10**, 539.

3. U.S.P. 713999, 1902; E.P. 17759, 1900. The individual fibers or strands of the material used for this purpose must be sufficiently softened so as to disappear to such an extent that the inner microscopic structure of the same disappears and the separate fibers merge into a single or integral filament without spaces or intervals. The liquid used to congeal the fused threads depends on the starting material and the solvent bath employed. Where an ammoniacal copper oxide solution has been employed as a solvent, an acid such as sulphuric or acetic acid, etc., is used; where zinc chloride was used as a solvent alcohol is to be employed as a congealing agent, when sulphuric acid was the solvent water should be the congealing agent, where nitrocellulose and ether or alcohol have been employed a mere exposure to the air or drawing the filament through water will be sufficient to arrest the solvent action. Thereupon the solvents and the congealing substances are completely removed from the filament by washing in much water, and the product dried on reels. In order to correct any flaws resulting from the imperfectly

pacted by drawing, and then passed through a hardening bath. Fine threads of silk, cotton or linen may be used as the filling substance of these artificial hairs, as in the process of F. Schauman and A. Larsson,[1] where the threads are immersed in an alcohol-ether solution of nitrocellulose containing 16 gm. per 100 cc. It is preferable to add to the solution 5–15% shellac and also 3–4% castor oil to increase the elasticity of the product. After coating, the threads are immersed in warm water to remove the solvent, denitrated if desired, and dried. The product is said to closely resemble natural horsehair, being stiff, but not brittle. The stiffness may be varied within wide limits by the use of varying proportions of castor oil. The processes of A. Samuel[2] and J. de Sauverzac[3] differ only in unimportant particulars from the above. In the author's experience a close imitation of natural black horsehair is possible by taking 50s six-cord black thread which has not been waxed or polished and previously extracting with acetone or wood alcohol to remove any possible oil or wax, and thus cause the nitrocellulose to permeate the thread more readily. In slowly passing such thread through a pyroxylin lacquer of 12–14 oz. pyroxylin to the U.S. gal. the first coating will cause an increase in weight after drying of about 60%. A second coating applied similar to the first will cause the original thread to increase in weight about 145%. As this size thread is readily procurable in 12,000 yard spools, the coating of the thread in this manner is not a tedious operation. Thread thus coated, while still black, yet has that peculiar superficial transparency due to the colorless pyroxylin which is so noticeable in natural horsehair. Silk fish lines coated in this manner, only dyeing the pyroxylin a light green by means of victoria green dye, produces a line which is impermeable to water, nearly invisible in the water and which has a tendency to float, an advantage when using live bait, as it tends to keep the bait toward the surface and hence free from weeds and other obstructions in the water. Coating of silk line in this manner renders it very easy to reel and prolongs its life and wearing qualities. Where cuprammonium threads are used, they are immersed[4] while still containing copper, into a concentrated solution of sodium carbonate containing 2–6% ammonia; it is stated that under this treatment the material acquires considerable elasticity,

united strands of the components of the artificial horsehair where they have not been perfectly united without again drawing the product through the solvent and congealing bath, the artificial horsehair may be finally drawn through a solution of caoutchouc or gelatin or collodion. This will suffice to cover any such flaws.

1. F.P. 333246, 1903.
2. F.P. 348137, 1904.
3. F.P. 349620, 1904.
4. F.P. 351206, 1906; D.R.P. dated Nov. 24, 1904.

tenacity and transparency. It is then washed and freed from all the copper it contains and finally dried under tension.[1] In textile industries such threads are used for the preparation of the warp for especially strong fabrics, and to give the woven fibers added rigidity, so that there will be no tendency to slide out of their position. C. Roux[2] dips the stiffened fabric into a weak pyroxylin solution, which partially softens the fibers and causes the whole to blend into a single piece of cloth intertwined with nitrocellulose filaments. Artificial horsehair has been used as incandescent electric-light filaments, and, when knit into "stockings," for Welsbach mantles.

A. Dubois[4] has devised a peculiar process for giving a lisle-thread finish to fabrics by impregnating the fabric with an acid aniline black mixture, which tends to carbonize the filamental fuzz on the surface, then rolling the article in a tumbling drum until the fuzz has been removed, when the material is given a light coating of pyroxylin, which serves the double purpose of laying the fuzz and adding luster. Artificial lace is produced by W. Ratignier and H. Pervilhac[4] by a method in which the pattern (Fig. 141) to be produced is engraved upon the metal or ebonite cylinder *a*, the grooves being equal in width and depth to the filaments to be produced. The trough *b* contains the fiber substance, which, as the cylinder revolves, is deposited in the engraving. The doctors, *cc*, remove any excess, and the roller *d* and the blower *e* supply the necessary hard-

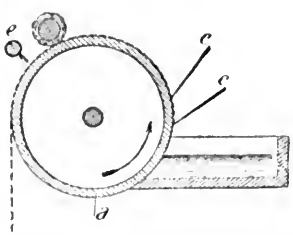

FIG. 141.—The Ratignier & Pervilhac Artificial Lace Machine.

1. F.P. 351207, 1905. Verein. Glanzstoff Fab. Act.-Ges.

2. F.P. 392179, 1908; R. Freerichs (U.S.P. 729749, 1903) makes artificial human hair by producing a colored cellulose fiber of suitable thickness made from cellulose solution in copper ammonia, and treating with an alcoholic solution of an oil and powdered talc. G. Kraemer (E.P. 26201, 1905; U.S.P. 942395, 1909) impregnates textile fibers with a mixture of nitrocellulose, chlorhydrins, and with aromatic sulfo acid derivatives. A suitable mixture is said to result upon combining 100 parts pyroxylin in 450 parts alcohol and 350 parts acetone, with 50–60 parts dichlorhydrin and about 25–45 parts of an aromatic derivative of a sulfo acid, as *p*-tolnolsulfo chloride. The threads, fibers or fabrics are impregnated with the mixture in any suitable manner, and dried. If they are to be dim, they are simply air-dried or wind-dried, but if they are to receive a brilliant luster, they are dried by means of warm pressing cylinders, plates or rollers. Tensile strength tests show that fibers impregnated in this manner gain materially in strength. Fabrics obtained by spinning and weaving such impregnated filaments are useful for borders and hem laces on women's clothes, which owing to their impermeability to water, can be washed off any time, while permanently retaining their silky luster.

3. U.S.P. 723147, 1903.

4. E.P. 13518, 1907. The Soc. Anon. des Celluloses Planchon (F.P. 410721, 1909) prepare artificial foil by converting artificial hair into foil, by passing between rollers such as are used in the preparation of metal foil.

ening agents to the fiber substance before it leaves the engraved cylinder. The hardening agents vary according to the viscous substance used.

The speed is regulated so that the tissue can be produced continuously. The preparation of acceptable artificial bristles has been often attempted, but as yet without satisfactory results. It appears to be very difficult to combine elasticity, resiliency and wearing qualities when the bristles are wet, as when they are placed in brushes intended to be afterwards used for scrubbing. Artificial horsehair is used in large quantities in braid, passementerie, hat trimmings, chiefly the so-called "theater hats," plumes, and the ornamenting of the bodices of ladies waists with pompons, and similar decorations. A machine similar to that used for forming horsehair into fabrics, as in the old-fashioned horsehair couches, is used for this work.

"Crinol" is the French name for an artificial horsehair prepared from cuprammonium cellulose,[1] in which the ammoniacal cupric hydroxide is separated by hydrolysis from the other constituents of the cuprammonium solution, and this purified product used to dissolve the cellulose. The patentees claim that when all the cupric hydroxide in a cuprammonium solution is in the colloidal state, approximately two parts of cellulose can be dissolved by each part of cupric hydroxide in solution. These colloidal solutions can be prepared in two ways: (*a*) By treating solutions of copper salts with ammonia and caustic alkalis, the solutions being of such concentrations that the cuprammonium solution contains no more than 15 gm. of cupric oxide per liter. (*b*) By the joint action of air and ammonia on metallic copper in the cold and subsequent dialysis of the product. Pure cellulose is dissolved in liquor *a*, to which has been added enough of liquor *b* to make the mixed solutions sufficiently concentrated to dissolve the amount of cellulose required for the filament to be made. The concentration of the caustic alkali solution (employed in the coagulation of the solution of cellulose in cuprammonium hydroxide) is of importance, it having been found that with a low concentration the coagulation is not complete; with too strong a solution, however, the thread, after formation, tends to become brittle and is irregular in form owing to the capillary tubes of the spinneret becoming blocked. The latter faults are obviated by adding sodium carbonate to the bath (which should contain 50% of caustic soda and 25% of sodium carbonate) and maintaining the temperature of the same at about 35°. The

1. Soc. Anon. Le Crinoïd, F.P. 362986, 1906; 401741, 1908; 410827, 1909; E.P. 21191, 1908; 22413, 1909; F. Beltzer, Mon. Sci., 1908, (4), **68**, 657; abst. J.S.C.I., 1906, **25**, 808; Zeit. ang. Chem., 1910, **21**, 1731.

threads are passed through a second, weaker bath and then through a solution of sodium bisulphate (to remove the excess of copper hydroxide), after which they are washed and dried.

"Meteor" is also a patented name for a similar article.[1]

Spinning Artificial Filaments. In addition to the spinning methods heretofore described, various refinements have been devised, especially within the past five years. In one method [2] the solution is supplied to closed reservoirs, one of which is discharged while the other is being charged. The discharge is effected by means of air, compressed by a pump so arranged that the pressure is accurately governed by means of weights and regulating springs which move levers connected with the electric motor driving the pump. The solution is thus delivered under pressure to a special pump fitted with several pistons in order to avoid pulsations, and especially constructed suction-valves which are under control. The pump passes the solution into a regulating cylinder containing a piston which acts as the governor for the spinning system. This piston is worked by a motor controlled in a manner similar to that working the air pump, and the pressure-accumulator is capable of very delicate adjustment by means of reservoirs of water above the weights. The process of A. Lumière et Fils [3] has for its object the saving of all loss of time

1. For hardening various artificial silks by means of moderately concentrated sulphuric acid solution, see Verein. Kunstseidefab. Frankfort, Text. Rec., 1903, **26**, 128; Text. Mfr., 1903, **29**, 299.

2. Process of Soc. Desmaris, Morane and M. Denis, F P. 342655, 1904. In the apparatus of L Morane (F.P. 410267, 1909; E.P. 24707, 1910), the spinning nozzles are arranged in two rows in partly rectilinear chambers, the number of nozzles in each chamber being the same as the number of filaments to be wound together on a bobbin to form the thread. Each chamber may be pivoted at one end so that the nozzles can be brought close to the workman for repairs, etc. The collodion enters the chamber through a filter at the pivoted end, the supply being regulated exactly by means of a suitable valve. To assist in the regulation, a portion of the supply tube for the collodion is formed of a piece of thick glass tubing, and immediately in front of this glass tube drops of colored collodion are injected into the main supply of collodion, a color being used which is destroyed by the bath subsequently used for treating the threads. In the method of F. Cochius (E.P. 9017, 1903) abst. J.S.C.I., 1903, **22**, 1083) the liquid is forced horizontally through a number of forming-nozzles, placed in a wall of a long trough which contains the coagulating liquid. As the threads reach the further end of the trough, they are united into a single thread, the cocks for controlling the supply of liquid to the forming nozzles being regulated by a single movement. In the Hömberg process, high gloss of the filament is said to be produced by the use of jagged nozzles.

3. F.P. 350288, 1904; 361960, 1905; in this firm's D.R.P. 177957, 1905, there is described a process of manufacturing cellulose threads from nitrocellulose solutions, with a view to removing the objections to the dry setting, which renders the product apt to split, and to the wet setting, which on account of the superficial setting alters the shape and size of large threads such as artificial horsehair, consisting in bringing the thread as it issues from the nozzle into contact with a nitrocellulose solvent to which has been added, in a determined quantity, other fluids which render the solvent incapable of dissolving the nitrocellulose, e.g., methyl alcohol with 5–8% water added. The use of water for operating the hydraulic piston in the apparatus in which the collodion is supplied to the spinning device

and material which results when the spools are changed in the spinning. During the change of the bobbin a certain length of thread is lost, and the fixing of the thread to the new bobbin is one of difficulty. The apparatus works in such a way that the full spool or bobbin is removed, and at the same time stopped from revolving, while a new bobbin is put in its place and made to revolve. Fig. 142 is a vertical section of the apparatus, which consists of a double-flanged driving cylinder, which is fitted with a framework holding empty spools so arranged that the spool at the top automatically falls into gear with the driving cylinder, and commences to wind the thread upon itself.

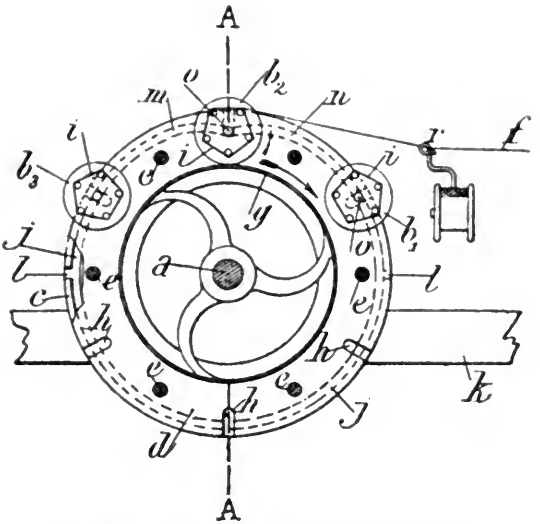

FIG. 142.—The Lumière Spinning Mechanism.

When the spool is full the framework revolves and takes the full spool out of gear and puts an empty one in its place. The periphery of the winding spools is covered with a wrapping of collodion, so that the thread impregnated with the solvent affixes itself tenaciously to the spool as soon as it touches it.

In 1906[1] E. Mertz patented his machine for spinning artificial

under a pressure produced on the hydraulic principle, has a disadvantage that the collodion becomes clotted and precipitates out when traces of the water leak between the piston and the cylinder wall. In order to overcome this, Lumière (F.P. 361323, 1905) replaces water as the hydraulic medium by a solvent of pyroxylin (preferably amyl acetate), which is pumped into the cylinder and accumulator in the same manner as water in the ordinary press.

1. F.P. 219538, 1892; 364912, 1906; Sw.P. 4449, 1892; for process of "lustering" natural silk see B. Loewe, F.P. 403242, 403243, 1908; E.P. 18086, 18087, 1909; abst. J.S.C.I., 1909, **28**, 1310. See also Bâle, F.P. 364912, 1905.

silk, which has been used quite successfully in France and elsewhere, and in which the pipe which supplies the silk solution under pressure is surrounded by another pipe in which a refrigerating liquid circulates. In one form of apparatus the spinning machine consists of a hollow comb-shaped vessel, which is connected to the supply of solution by a pipe and tap. The tooth portion consists of a number of glass tubes with capillary openings. The spinning apparatus is placed in tanks containing an acid solution in order to give the thread a certain consistence, and these tanks are themselves placed in cooling tanks. The threads from the required number of spinnerets are led through a guide, which, by means of an elliptical arrangement of wheels, is made to move to and fro in front of a revolving bobbin, so as to wind the thread into the shape of a bobbin with conical ends. The winding rollers dip into a suitable washing liquid. Another form of spinning apparatus consists of a tube in the shape of a truncated cone. In this is placed a spindle of the same shape which has several fine longitudinal grooves on it. This spindle is pressed into the truncated portion of the other tube by means of a rubber pad. The solution enters at the lower part, and is forced through the grooves on the spindle, which forms capillary openings when the spindle is forced into the outer tube. In another form each capillary opening is furnished with a tap so that any desired number of threads can be spun together. By means of conical driving pulleys the speed of the machine can be altered, and so the fineness of the fibers obtained may be varied.

In W. Crombie's method [1] the cellulose solution is delivered from a perforated nozzle into a vessel through which the coagulating liquid flows without intermission, the level of the liquid in the vessel being kept constant. The outlet pipe, which is immediately below the spinning nozzle, gradually tapers and bends upwards, the effect being that the rate of flow of the coagulating liquid increases and the threads are carried to the end of the pipe without coming into contact with,

1. E.P. 16557, 1908; F.P. 405782, 1909; abst. J.S.C.I., 1909, **28**, 978; 1910, **29**, 17. Crombie (Fig. 143), relates to apparatus of the kind wherein the solution from which the fiber is to be prepared is successively treated with two different coagulants, and the fibers produced stretched or drawn to a finer size. The solution, supplied through the pipe, B, provided with a rose, comes into contact with the first coagulant in the vessel, *A*, and the fibers, *F*, are drawn or stretched during their passage through this vessel. The fibers issue at *G* into a second coagulant; the latter is supplied from an open trough, *H*, through an annular inlet, *I*, the rate of flow being adjusted by raising or lowering the tube, *K*, through the gland, *L*. The vessel, *A*, is filled with the first coagulant by exhausting the air through *N*. The rate of flow from *E* is adjusted, so as to keep the liquid in *A* at proper working strength, and at the same time prevent the second solution in *H* from rising into *A*. See W. Crombie and F. Schubert, E.P. 24922, 1908; F. P. 409387, 1909.

and being damaged by the walls. Upon leaving the pipe the threads pass to grooved rollers, or inclined planes, for further treatment.

In order to increase the uniformity of size and structure (denier) of the filament[1] the collodion solution is forced under pressure through the usual capillary openings and then falls vertically through a tube open at both ends and lined with an absorbent material which is kept moist with alcohol so that the air in the tube is kept saturated with alcohol vapor. The collodion thread during its passage through this tube

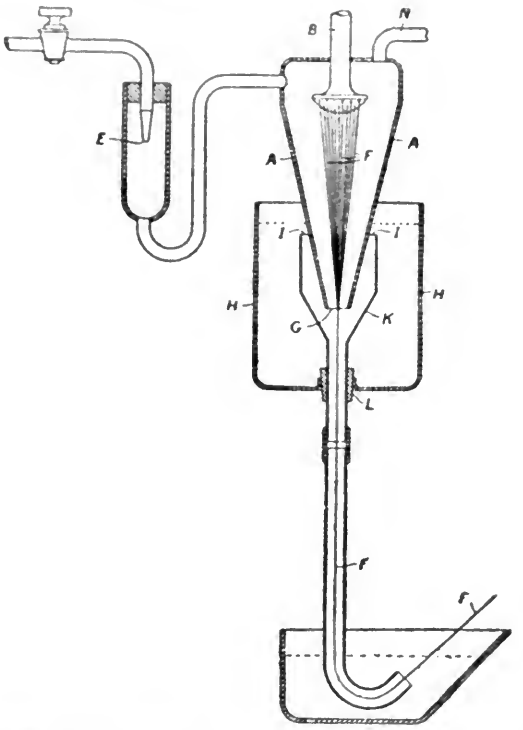

FIG. 143.—Method of Hardening Artificial Filaments According to Crombie.

cannot dry and remains perfectly cylindrical. It then falls into the receiver, which consists of a cylindrical vessel which can be revolved on its vertical axis and contains an inner sieve-like vessel which revolves with it. The receiver is filled with the coagulating liquid. The thread falls into the revolving sieve and is immediately coagulated and arranged in the shape of a truncated cone by the revolution of the receiver. When this sieve is full, it is removed from the receiver

1. A. Lumière et Fils, F.P. 382718, 1906.

and replaced by an empty one. The sieve full of thread is immersed first in water to remove the solvent and then in the denitrating solution.

In the method of E. Ker patented in 1906,[1] the bobbins of artificial silk fibers, after being removed from the spinning machine, are placed in a horizontal position in washing baths, the liquid in which reaches up to the axis of the bobbin. The latter are slowly rotated on their axis in the liquid. The action of centifugal force is avoided by the slowness of the rotation, so that the liquid is absorbed by the fiber, and penetrates to the lower layers. To dry the latter, they are placed in a drying chamber, and a similar slow rotary motion is given to them.

In another method [2] the filaments immediately after their formation are wound crosswise on bobbins which have an undulating surface, such that an end elevation of a bobbin would have a circumference like that of a cog-wheel. It is claimed that the use of such a bobbin protects the wound filaments from excessive tension and also allows an easy access of liquid to the filaments during subsequent operations.

According to the process of G. Guadagni [3] the filtered cellulose solution flows from a reservoir into a horizontal pipe, supplied on its upper side with short vertical branch pipes at intervals of 15–20 cm. Each of these short pipes is provided with a cock, and terminates in a glass nozzle. Around this glass nozzle is fixed a cylinder, fitted with inlet and outlet pipes, through which the coagulating solution

1. E. Ker, F.P. 366793, 1906; the Soc. Anon. des Celluloses Planchon (F.P. 399218, 1908) describes a spinning machine as an improvement on F.P. 382718, 1906 (J.S.C.I., 1908, **27**, 221), being intended to increase the productive capacity of the machine therein described, and to regulate the formation of a fiber of collodion issuing from a nozzle into a vessel containing a liquid by which the solution of collodion is coagulated. The apparatus consists of a number of units, each complete in itself and each containing a nozzle and a vessel to receive the fiber ejected from that nozzle. The nozzles are fed by cylindrical vessels containing collodion and fitted with pistons which are operated by compressed air. By altering the air pressure the supply of collodion to the nozzles is regulated. Each cylinder supplies one or more nozzles. The nozzle is connected to the cylinder by a flexible tube provided with a tap and also with a filter. By a mechanical device the tube moves in a conical path, the nozzle describes a circular path in a horizontal plane, and the receptacle underneath the nozzle revolves on a vertical axis in such a way that its radius corresponds to the diameter of the circle described by the nozzle. The fiber is thus deposited in circles passing through the center of the receptacle and touching its inside wall. The fiber solidifies under the action of the liquid in the receptacle (see F.P. 361960, 1905; abst. J.S.C.I., 1907, **26**, 197), and in this way is said to give a product which can be readily taken out and further manipulated without damage.

2. Gocher Oelmuhle Gebr. van der Bosch, F.P. 374790, 1907; E.P. 6942, 1906.

3. E.P. 12253, 1908; A. Clark (E.P. 2695, 1887) prevents agglomeration of the matter around the orifice through which the solution is expelled in being made into threads. This is effected in the following way: superheated steam at 200° is brought to bear on the substance as it leaves the orifice, and this extracts the solvents of the viscous matter and carries them away, leaving the thread quite dry, and the latter may then be spun. In other cases ammonia gas at 100° is used for the same purpose.

flows. Upon leaving the nozzle, the thread rises in this cylinder and is led over a stretching roller, which is run at such speed as is suitable to the rate of the flow of the cellulose solution and the fineness of the thread desired. The driving roller is of the same diameter as the stretching roller and runs at the same speed; it is partially immersed in the washing tank and drives the reeling bobbin (which is entirely immersed in the washing liquor), by direct frictional contact.

In order to give greater uniformity to the filaments the solution may be passed under pressure [1] into a cylindrical box, the bottom of which is furnished with a number of openings for the production of the fibers. Surrounding the upper part of this box is another receptacle in connection with the supply of precipitating liquid, and furnished with a number of fine openings above the level of the capillaries by which the filaments are formed. The whole arrangement is placed at the top of a vertical cylinder, of a length corresponding to the time required for the fiber to set, and filled with the precipitating solution to just above the level of the openings from which the filaments issue. The filaments pass downward through this cylinder in contact with a descending current of precipitant, and pass out at the bottom of the cylinder onto suitable bobbins. This arrangement is stated to give uniform filaments owing to there being no irregular movements of the precipitant. Or the spinning solution may be forced [2] from a reservoir through a number of fine spinning nozzles into a trough, through which flows a steady stream of the coagulating reagent. The newly formed filaments are carried along by this stream and delivered onto the surface of a rotating drum, which is so arranged that the coagulating reagent falls onto it after flowing through the trough. In addition to carrying forward the continuous filaments, the drum is caused in this way to gather up any broken threads. The apparatus is provided with devices for regulating or stopping the flow through each spinning nozzle. In the inventions of H. Tetley and J. Clayton [3] the hollow spindle, which is rapidly rotated, is carried on a swinging frame so that when the nozzle is moved into a convenient position for inspection, the wheels which rotate the spindle are thrown out of gear. A pump for forcing the fluid through the spinning apparatus is likewise so mounted that it can be disengaged from the driving gear at will. The solution passes from a supply pipe to the pump, is then forced through a filter carried by the frame on which the spindle is mounted, and afterwards travels through the

1. As Gocher Oelmuhle Gebr. van der Bosch, F.P. 373887, 1907.
2. T. Chandelon, F.P. 394009, 1908; see R. Haddan, E.P. 12879, 1899.
3. E.P. 19157, 19158, 1908.

rotating spindle to the nozzle, which is immersed in a coagulating bath. The thread, which is twisted by the rotation of the spindle and nozzle, is led over suitable guides to a winding reel which is provided with means for laying the thread as it is wound. This winding reel can also be put out of gear and replaced by another reel when required. All the driving means of the apparatus are geared so that they have the required relative speeds, which can be altered at will by a change of wheels. In the second of the present patents (No. 19158) claim is not made for a rotatable nozzle. In the method of the Soc. Boullier and Lafais [1] in order to insure that the spinning of the filament is carried out at the proper temperature, a radiator consisting of a number of steam pipes is arranged behind the spinning frame and adjusted so as to produce around the newly spun filaments the temperature which has been found to be most suitable. The brilliancy of the thread [2] may be increased by adding fatty sulphonic acids to the solvent before spinning.

In the filament-forming apparatus of M. Waddell [3] shown in Figs. 144–146, the spinneret is a combination of two concentric delivery tubes, which are both rotatable about the same axis. The cellulose solution is forced through the outer delivery tube, while the corresponding coagulating solution is forced through the inner tube. The nozzle of the spinning-tube is immersed in a liquid in order to exclude air, and as soon as it is tilted up so that the ends of the delivery tubes are no longer covered, the spinneret is automatically thrown out of gear. The machine is also provided with a filtering device.[4,5]

1. F.P. 392442, 1908; E.P. 15015, 1908; abst. J.S.C.I., 1908, **27**, 1201.

2. According to Fab. de soie Artif. Tubize, F.P. 361690, 1905; E.P. 2906, 1906; it is claimed that the oils enter into combination with the collodion without precipitating the nitrocellulose, thus differing from the resins, and being insoluble in water and not completely volatile they leave by evaporation a pellicle on the fiber or product obtained, which increases its stability and resistance to washing.

3. U.S.P. 849822, 849870, 1907.

4. In the method of A. Lumière et Fils (F.P. 361329, 1905) for the filtration of collodion for the preparation of artificial silk, a continuous roll of filtering medium is provided outside the press. A portion of the fabric is clamped tightly over the perforated support by means of a screw-head, and the collodion is admitted under pressure from below through a pipe provided with a stop-cock. When the filtering surface has become clogged, the stop-cock is closed, the conduit for filtered collodion is also closed, the screw-head is raised slightly, and a new filtering surface is pulled through from the roll, and is clamped down ready for use. Their acceptable collodion for artificial silk manufacture (F.P. 361324, 1905) is prepared by dissolving 300 parts of nitrocellulose in 200 parts of methyl alcohol, 200 parts of ethyl alcohol, and 1600 parts of ether. Owing to the excess of ether this collodion is very fluid, and can be easily filtered under a slight pressure. The collodion is then distilled in a vessel provided with stirrers, until 1000 parts of ether have been driven off and condensed for future use. The concentrated collodion is cooled, and, having already been filtered and freed from air while in the dilute condition, it can be directly stored in closed vessels ready for spinning.

5. In forming solid products, such as artificial silk or horsehair, from solutions of cellulose in aqueous solvents, according to the process of L. Cuntz (F.P. 383411,

In U.S.P. 849870, 1907, the end of the spinneret is immersed in a spinning trough containing the coagulating solution. The filaments thus formed travel horizontally along the trough and are taken up by one of two independently removable winding-spools, which are mounted upon a common shaft. In order that the filaments may be thoroughly coagulated, this shaft is so arranged that the spools are partially immersed in the coagulating solution. The trough is provided with a guiding device to deliver the filaments to either of the spools. In the production of threads from a solution of collodion in acetone, the evaporation of the solvent produces a certain degree of cooling of the surrounding atmosphere, and the surface of the

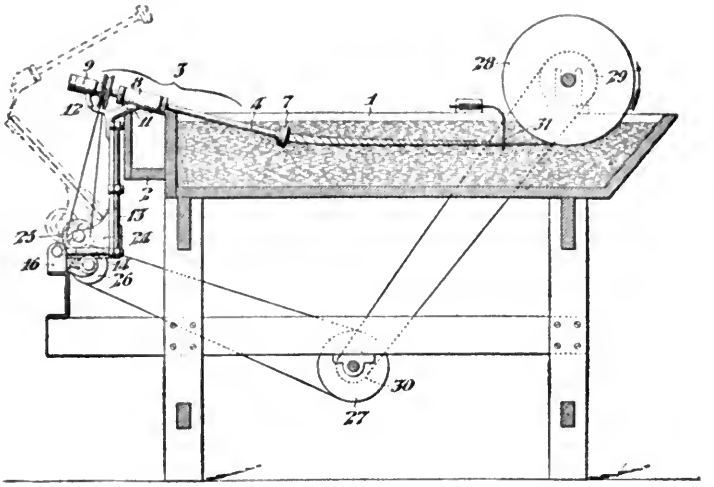

FIG. 144.—The Waddell Apparatus for Forming Filaments.

thread often becomes dull and "milky" from the deposition of moisture. According to A. Cordonnier-Wibaux[1] this may be avoided by passing the newly formed thread in close proximity to suitably arranged sources of heat. The dehydration of fibers produced by the cuprammonium process may be carried out by the same arrangement, and the strength of the fibers is improved. J. Boullier[2] has found

1907), the cellulose solution is first caused to pass from the delivery orifices through a medium in which it may be moulded to the desired shape but not coagulated, and thence directly into a bath which rapidly solidifies the moulded cellulose. The moulding medium may be either gaseous, e.g., the air, or a liquid, such as acetone, benzene, petroleum, carbon bisulphide, oil, turpentine, etc. This moulding liquid may be contained in the same vessel as the coagulating liquid, on which it floats as a superficial layer.

1. F.P. 401343, 1908.
2. F.P. 368190, 1906; E.P. 16512, 1907; abst. J.S.C.I., 1906, **25**, 1217.

that this milky appearance is due to the solvents employed having too low a vapor tension, and can be overcome in the following ways:

(1) By seeing that the solvents are quite free from moisture.

(2) Addition of a body like ether.

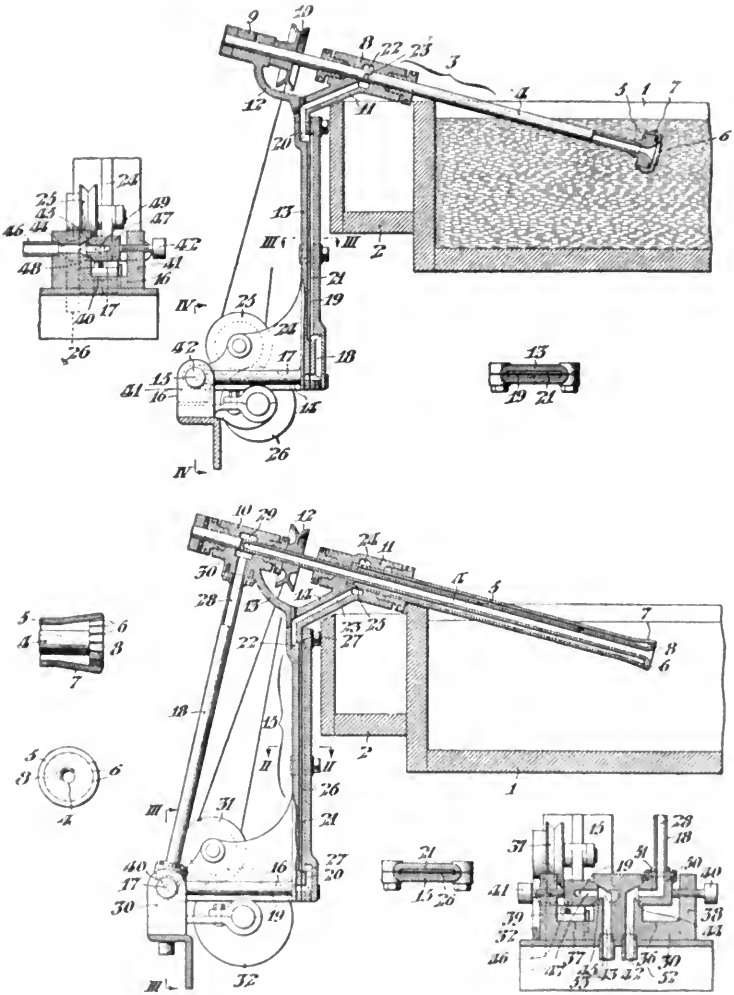

FIG. 145.—The Waddell Apparatus for Forming Filaments.

(3) By spinning the filaments in a temperature so high as to increase the vapor tension of the solvent employed.

In the method of C. Bouillot [1] the filaments, on issuing from the

1. F.P. 373917, 1906; see also J. Douge, U.S.P. 699155, 1902; E.P. 2476, 1902.

capillary tubes, are received on a polished heated cylinder made of glass or metal, and revolving at a speed corresponding with the rate of production of the fiber. From this cylinder the filaments pass, a certain number at a time, through a forked guide which moves transversely across the surface of a revolving bobbin and so winds the compound thread in a spiral manner. This bobbin rests on another cylinder which revolves at a similar lineal velocity to the drying cylinder and drives the bobbin by friction. The whole apparatus is inclosed in a metal box from which the evolved vapor can be removed by aspiration. The box is provided with a glazed opening through which the operation can be watched and which also serves for the removal of the bobbins when these are full.

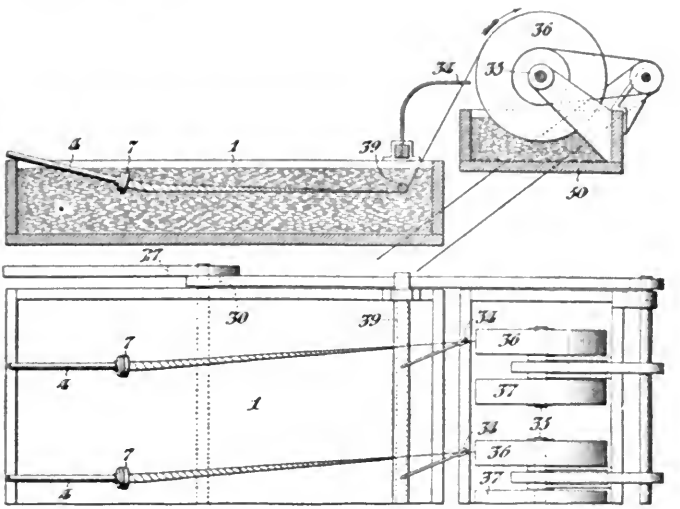

FIG. 146.—The Waddell Apparatus for Forming Filaments.

For some time it has been known that nitrocellulose containing a certain amount of water was more soluble in a mixture of alcohol and ether than a dry nitrocellulose, and from this observation has been evolved several methods of introducing a definite quantity of water into the nitrocellulose solution, before the latter is forced into filamental form. Thus F.P. 231230, 1893, recommends the use of a nitrocellulose containing 25–30% of water. C. Dietl[1] has secured a patent, the object of which is to produce a thread that will dry immediately on exposure to the air, and which will not stick together. In producing a very thick thread it is necessary to twist several thin threads together, and it has been found that a nitrocellulose contain-

1. F.P. 356323, 1905; E.P. 15029, 1905.

ing 33–38% of water is most suitable, 30% of water being insufficient. With this amount the nitrocellulose can be dissolved in the proportion of 17–23 k. in 100 l. of the usual solvents, and will then spin a thread which does not stick. J. Stoerk [1] obtains best results with a pyroxylin containing 12–20% water, while the method of B. Julich [2] is characterized by the fact that pyroxylin containing 21–24% of water gives best results. G. Lacroix [3] claims to be able to spin satisfactory filaments with a nitrocellulose containing 35–45% water, the solvent preferred being equal parts of alcohol and ether. It is important to use relatively mobile solutions rich in nitrocellulose, in order to be able to force the solution through fine openings with the smallest possible pressure and to obtain uniform filaments. E. Berl [4] states that highly concentrated solutions of nitrocellulose, of relatively low viscosity, can be prepared if the dried cellulose before nitration be heated to a high temperature for a long time in presence of inert gases free from oxygen (carbon dioxide, nitrogen, water gas, cooled fire gases, superheated steam). Under these circumstances the cellulose is depolymerized to a degree varying with the temperature and duration of heating. It is stated that with cellulose treated in this manner the cost of manufacture of smokeless powder is lessened, owing to the increased yield of nitrated product, the possibility of repeated regeneration of the nitrating mixture, and smaller consumption of solvents.

In the so-called Topham turbine system of collecting and spinning the threads at the same time,[5] which has been previously used in the spinning of short-fibered yarns, principally asbestos, the squirted thread passes over a roller and thence into a rapidly rotating box. As they are fed in, the fibers are twisted together, the centrifugal force causing them to form a compact coil around the interior of the box and to be formed into hanks or skeins. If the boxes are deep, a longitudinal reciprocating movement can be given to either the box or the funnel to make sure of the even coiling of the thread in the skein form. It is said to reduce to a minimum the strain on the newly formed threads.

In spinning machines for producing artificial fibrous material, such as described, for instance, in certain [6] earlier patents of R. Strehlenert, and in which the spinning or twisting takes place by force of gravity and the current of coagulating liquid is made use of for taking

1. E.P. 26982, 1902.
2. E.P. 27527, 1906; F.P. 371544, 1906.
3. E.P. 2192, 1905; F.P. 351265, 1905.
4. D.R.P. 199885, 1907.
5. E.P. 23158, 1900.
6. U.S.P. 702163, 1902; D.R.P. 96208, 101844, 102573, 1897; E.P. 3832, 1897; 58, 1899; Sw.P. 13695; see also "Die Kunstliche Seide," C. Suvern, 1900, p. 60.

up the torn fibers, the apparatus can only be set to work either at starting or after an interruption—for instance, in consequence of the rupture of all fibers fed by the press, when the fibers are caught hold of by hand—i.e., the textile fibers leaving the openings must be dipped down to the bottom of the spinning-cone for the coagulating liquid by means of a piece of wire and caught hold of by means of a second wire introduced into the collecting-tube and drawn up to a spool on which the thread is wound. Since this operation is very tiresome and the quick collecting of the pressed-out fibers requires great practice in order not to lose too great a quantity of the dissolved spinning material, R. Strehlenert [1] has improved on his older processes noted above and has perfected an invention which has for its object an automatic collection of the fibers at the starting of spinning, as well as after a complete or partial interruption of the operation. The collection of the torn fibers and the further leading on of the bundle of fibers coming from the spinning-cone are permitted by the arrangement of a return-conduct which is designed to lead the coagulating liquid between the spinning-cone and the collecting-tube arranged as a prolongation of the same to the spinning-cone. By allowing the return-conduct to enter the inside of the spinning-tube tangentially a rotation of the liquid is attained.

On the accompanying drawings (Fig. 147), 1 and 2 show the apparatus in longitudinal section and in plan.

The pressing-nozzle *A* is arranged in the spinning-cone *B*, which is destined for holding the coagulating liquid and which ends into the collecting-tube *C* for the spinning material or fibers *H*. The upper end of this tube *C* and the spinning-cone *B* are connected by a communicating-tube *D*. The bundle of fibers leaving the nozzle causes, by adhesion of the liquid on the fibers, a current, which sets up a circulation by aid of the return-conduct. The tube *D*, which is intended to lead the coagulating liquid into the cone *B*, is preferably positioned tangentially to the periphery of the cone *B*. The coagulating liquid is introduced into the tube *D* by an elbow-pipe *E*, fixed to the tube and directed toward the cone *B*. By this arrangement the advantage is arrived at that in the cone *B* the current of liquid is greater and quicker, since the stream of liquid passing out from the pipe *E* carries with it fluid from the upper and widened part of the tube *C* and acts

1. U.S.P. 716138, 1902; E.P. 28364, 1902; in order to decrease the tendency of the filament to absorb water and swell up, thus reducing its strength in the wet condition, Strehlenert (E.P. 22540, 1896; Mon. Text. Ind., 1897, **12**, 752) mixes with the nitrocellulose solvent before drawing out the threads, formaldehyde, acetaldehyde, paraldehyde, benzaldehyde or other aldehydes, in amounts up to 15% of the weight of the nitrocellulose. See also Strehlenert and F. Reubold, U.S.P. 812098, 1906.

like an ejector, thereby rotating the liquid in the cone *B*, which at the same time has a continually increasing velocity by reason of the funnel shape of this portion of the moving body of liquid. According to this arrangement it is not required to introduce a greater amount of new liquid than is necessary for the coagulation of the fibers. However, the effect of the amount of liquid serving to collect the torn fibers is in this case so great that this quantity is able to collect complete bundles of fibers, when the apparatus is set to operate from the beginning, or after an interruption of the operation has taken place.

In order to prevent the bundle of fibers from slipping back with the current into the tube *D*, the mouth *F* of the same is covered, for instance, by a fine-wire net or the like. (Not shown.) Any superfluous coagulating liquid runs off through the overflow *G*.

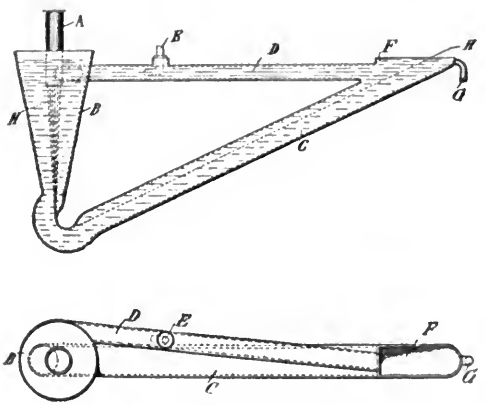

FIG. 147.—The Strehlenert Method of Spinning and Twisting Artificial Fibrous Material.

The processes of X. Eschalier [1] particularly adapted for the treatment of artificial silk products for the purpose of "sthenosage" (strengthening the threads), consists in the action of aldehydes, especially formaldehyde, upon cellulose and albuminoid bodies in the presence of acids or acid salts in conjunction with dehydrating agents. Artificial silk, for example, is placed in a bath of formaldehyde (1–10 parts) and acetic acid, 10–40% (90–99 parts). The threads after removal from the bath are placed in a desiccator containing calcium chloride or sulphuric acid until completely dry, and are afterward heated for four to five hours at 40°. Finally, they are washed in

1. E.P. 25647, 1906; F.P. 374724, 1906; First Addition thereto, dated Nov. 5, 1906; Second and Third Additions dated Oct. 7, 1908; Fourth Addition, dated Mar. 31, 1909; abst. J.S.C.I., 1907, **26**, 821, 1292; 1908, **27**, 157; 1909, **28**, 362, 1121.

water and again dried. Another method consists in placing the threads in a bath of glacial acetic acid containing formaldehyde for three to four hours at 90–95°, and afterward washing with water and drying. The aldehyde and the dehydrating agent which are employed for strengthening artificial silk may be applied to the material either alternately or simultaneously. The following process gives good results. The material to be treated is impregnated with a solution of lactic acid and alum of such a concentration that the fiber retains 5–6% of its weight of each reagent. It is then placed in a closed vessel containing a dehydrating agent such as sulphuric acid at 50–60°. Through an opening in the wall of the vessel 10–25 parts of a 40% solution of formaldehyde are introduced for each 100 parts of material. The opening is then sealed and the apparatus heated to 50–60° for a further five or six hours. The material is then removed, washed, and dried. Fibers which have been treated in the manner described in this patent exhibit an increased affinity for dyestuffs if treated with a solution of sodium or potassium hydroxide. If a concentrated solution be employed, the time of action must be short or the strength of the fiber will be affected and its length diminished. Oxidizing agents such as hypochlorites may be added to the solution. The reagents used for the "sthenosage" may be dissolved in other media than water, e.g. acetone, alcohol, glycerol, etc. The use of acetone is particularly advantageous, since it dispenses with the usual process of dehydration. The dry silk is introduced into a bath composed of 150–200 parts of acetone, 5–20 parts of 40% formaldehyde and 0.5–0.15 parts of sulphuric acid of 66° Bé. or hydrochloric acid of 23° Bé. These quantities are sufficient for treating 10 parts of silk. The whole is boiled for three to five hours under a reflux condenser, the silk being completely immersed. The silk is then washed with water and dried. When required for dyeing, the silk is subsequently steeped in an alkaline solution of a hypochlorite. containing 30–50 gm. of sodium hydroxide and 3–5 l. of available chlorine per liter. Other acids may be used, if desired, instead of the mineral acids.[1] The effect of this treatment on the physical prop-

1. An ingenious process has been worked out by W. Morton (U.S.P. 705691, 1902) for the formation of artificial silk filaments, which in its broad scope relates to the electrical method of dispersing fluids, whereby volatile fluids are separated from their combination or association with relatively non-volatile or fixed substances in composite fluids, resulting also in the evaporation of the volatile fluids and a state of condensation or solidification of the relatively non-volatile or fixed substances, whereby fiber may be artificially produced. Broadly speaking, the process is practiced by delivering the composite fluid in an attenuated form into an electrically polarized atmospheric field produced by the convective passage through an atmospheric medium of an electric current of high tension. According to the inventor, if a quantity of a composite fluid to be thus electrically dispersed and separated be delivered in a fine stream or streams or finely divided state into

erties of the lustra celluloses, as recalculated into mean or average numbers by Cross and Bevan[1] is as follows:

	Breaking strain gms. per unit denier.		Elasticity elongation per cent.	
	Air dry conditions	Wetted.	Air dry.	Wetted.
For the lustra celluloses of the three processes, nitrocellulose, cuproammonium, viscose	1.25	0.37	12.2	9.0
Sthénose products	1.6	1.1	7.8	7.6

These results have been independently verified.

a polarized atmospheric field or path of a convective discharge between the polar terminals of an active source of electricity of high tension, a separation of the volatile component from the fixed component occurs and contemporaneously the fixed component is broken up or disrupted, the volatile component is evaporated, and simultaneously the fixed component is condensed or solidified. When a viscous solution of a tenacious fixed substance capable of setting or hardening while in a filamentous state is delivered in the manner above mentioned to the convective discharge, the volatile component is separated from the fixed component, and coincident therewith the rapidly condensing fixed component is broken up or disrupted into filaments by the action of the convective discharge, which are rapidly dried and solidified in a fibrous condition adapted to be used for textile or other purposes, according to the nature of the fixed component. It is preferable when employing heavy viscous composite fluids that the fluid upon which the process is to be practiced should be projected or delivered into the path or field of the convective discharge in an attenuated or finely divided form. If the composite fluid is viscous and its non-volatile component is capable of setting or hardening upon being deprived of its solvent, such as collodion, and the electrical tension is properly graduated to the delivery of the fluid, then fine long filaments are produced by the electrical disruption of the fluid after delivery into the convective field, and the filaments of pyroxylin will dry or set very quickly on account of the quick separation or evaporation of the volatile component, and the electrical dispersion of these solutions usually produces multiple threads or fibers of the fixed component, and these threads or fibers set or harden and dry with great rapidity. If the stream of the fluid discharged into the electrical field is continuous, the process of disruption of the fluid is also continuous, provided the electrical convective discharge is continuous, and hence by providing a continuous delivery of fluid into the path of a continuous electrical convective discharge the operation of the production of these fibers is continuous and the fibers may be collected mechanically—as, for instance, by reeling—as fast as they are produced. For the production of a field of convective discharge is employed any suitable source of high-tension or static electricity, such as a Holtz static machine, induction coils of large size, or the Tesla, Thomson, and other machines now well known for producing currents at enormously high voltage. Many different varieties of composite fluids the fixed component of which is sufficiently tenacious and adhesive for the purpose possess the property of being converted into fiber under the effect of high-potential electrical discharges. Among the materials for the making of fiber in this way being collodion, so-called "flexible" collodion (ordinary collodion to which has been added 5% Canada turpentine and 3% castor oil), and a solution of pure rubber and sulphuric ether.

This is similar to the process of Soc. Anon. "Le Crinoïd" (F.P. 410827, 1909) who add formaldehyde to the solutions of sodium hydroxide or carbonate used to coagulate cuprammonium cellulose solutions, to produce a more powerful coagulation, to form stronger threads, and to facilitate the recovery of copper from the spent baths. The most suitable additions for concentrated alkaline baths, to be used at 30–45°, are from 1.5 to 5% of 40% formaldehyde.

1. J.S.C.I., 1908, **27**, 1189. They say "In regard to the proportion of methylene

In the apparatus of E. Friedrich,[1] as shown in Fig. 148, the essential characteristics are that the twisting together of the separate threads does not occur until each separate thread is coagulated and hardened, so that the gumming together of the threads is obviated. The cellulose solution from which the threads are to be produced issues from the tube *a* through a number of fine apertures in the nozzle *b* into the tube *c*, to which at the same time the coagulating liquid is supplied through the pipe *d*. The threads issuing from the nozzle *b* are coagulated or hardened by the coagulating liquid as it passes with them in upward direction in the tube *c* parallel to its axis.

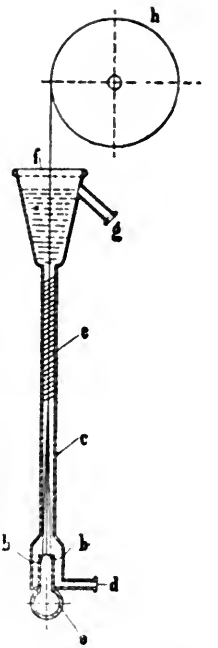

Fig. 148.—The Friedrich Spinning Apparatus.

The threads are twisted together on entering with the coagulating liquid into the interiorly grooved portion *e* of the tube *c*, which, owing to its interior helical groove, imparts a rotatory movement to the liquid. In case one of the threads is ruptured by the rotation imparted to them by the liquid the broken portion is immediately twisted again onto the main thread. The threads can be twisted around each other as frequently as desired by the properly selected number of turns or windings in the helical groove portion in the tube *c*. This cannot be accomplished in apparatus in which the entire body of the liquid is rotated.

The finished thread issues from the upper part of the apparatus at *f*, while the coagulating liquid is drawn off through the pipe *g*. The thread is wound upon the roller *h* or conducted away by it. To obviate the necessity of unwinding[2] certain kinds of silk after precipitation, an arrangement is proposed in order to rewind it into skein form, by which the thread is skeined without any intermediate reeling. The thread passes round an ordinary reel, which draws it

oxide fixed in combination, our own analyses of Sthénose silk, have given numbers between 0.35% and 0.8% formaldehyde, which expressed in molecular ratio, $CH_2O:C_6H_{10}O_5$, is approximately 1:30. This indicates a curiously disproportionate effect. It might be assumed in explanation that the fractional proportion of molecules or groups actually reacting are in the free or uncombined state capable of influencing the hydration capacity of the complex or aggregate, or as an alternative the suggestion is that a constitutional change in the cellulose itself accompanies the fixation of the CH_2O groups, and this suggestion is of moment, as it indicates a capacity of internal structural modification which offers an attractive field for research."

1. U.S.P. 827434, 1906.

2. Method of La Soc. Anon. Fabr. de Soie Artif. de Tubize, E.P. 3025, 1906.

through the precipitating liquor, and passes direct to a calibrating reel, upon which it is skeined. This reel is provided with a revolution counter, and the tension of the thread is kept constant by a counterweighted brake upon the ordinary (intermediate) reel. Should the thread break, the calibrating reel is brought to a standstill automatically. In order to increase the evenness of the artificial threads[1] they are cross-wound upon longitudinally corrugated reels immediately after their formation.

Comparison of Yarn Sizes. The bulk of the artificial silk at present produced is spun in 150–160 denier[2] sizes, equivalent to 37s to 10s cotton yarn. The 120 denier thread of to-day[3] varies in the number of the individual filaments, but it may be said not to exceed 25 in number, so that the size of the individual filament may be taken as from 5–8 denier. Real silk averages 2.75 denier per filament. The fine Cellulo silk (30–50 denier) may contain 45–60 filaments, which would make the size from 0.5–1.2 denier. Dreaper has also described artificial filaments of a tenuity as great as 0.33 denier—about one-eighth the size of a filament of natural silk. The present demand, however, is confined to the ordinary range of 100–130 deniers, although the lower deniers down to a 15 denier thread is no doubt a near commercial

1. Process of O. Müller, E.P. 3606, 4015, 1907.

2. The relative fineness of artificial silks is classified according to the international denier, a "denier" representing the weight in milligrams of a filament 10 meters long. It applies equally to the single filament (brin) or to the combination of these—usually 10–25—which constitutes the weaving unit. Thrown silk in the United States and England is usually based on the weight in drams of 1,000 yards. In France the size of silk is usually expressed in terms of the old denier, which is the weight in deniers of 400 ells, equivalent in length to 476 meters, the denier weighing 0.05313 gm. Old system deniers are convertible into international deniers by multiplying by 1.116, and conversely, by multiplying by 0.896. According to Cross and Bevan, "Researches on Cellulose," 22:

"In speaking of a yarn of 80 deniers having a 'tenacity' of 96 gm. and an 'elasticity' of 12, we are shortly expressing the ultimate facts as follows:

"The yarn weighs 0.080 gm. per 10 meter length, and breaks when stretched with a weight of 96 gm., having undergone an elongation of 12% in length. Assuming 16 unit filaments in the yarn, each is of 5 deniers and would bear one-sixteenth of the stretching weight. Taking an average diameter of the unit at 0.03 mm., this implies a sectional area of 0.000707 mm. square; and the tenacity may therefore be expressed as being equal to

$$\frac{6}{0.000707} = 8{,}486 \text{ gm. per mm. square,}$$

which at once conveys the relationship of cellulose to other structural materials which are capable of being produced as a regular solid in continuous length, e.g., the metals.

"Another form of expression which has advantages in comparing structural quality is the *breaking length*—that is, the length of the material which, supposed extended in space, will determine fracture; in the above case

$$\frac{96{,}000 \times 10}{80} = 12{,}000 \text{ meters.}"$$

3. W. Dreaper, J.S.C.I., 1909, **28**, 1297.

probability. It must be borne in mind, however, that a large proportion of artificial silk is used as the warp in textiles where the weft is real silk and that the finer the denier the greater covering power per unit weight. And as the value of these textiles depends not upon the weight, but upon the covering power and hence the appearance, it is evident that in considering the latter the finer deniers are desirable.

Dyeing of Artificial Fibers comprises not only the artificial silks, but artificial horsehair, straw plaits, mixtures of non-lustrous curly waste from artificial silk manufacture with wool or shoddy, and similar waste, carded and spun by itself. Artificial fibers may be dyed either by direct coloring while preparing the solution for projection through the minute orifices in the formation of the silk filament, or by dyeing the finished skeins. The first-named procedure has the appearance of being the more simple and suitable one, but practical experience has shown that the better way is to dye the fibers after formation into skeins. Dyeing the artificial silk while in course of formation consists in simply dissolving the appropriate dyestuff in methylated spirits or denatured ethyl alcohol, and adding to the filtered collodion a filtered solution of this dyestuff.[1] It is necessary to color the collodion very intensely that a heavy depth of shade may be produced in the final filaments, and the dyestuff used must be very carefully filtered from any undissolved particles, in order to guard against stoppage of the minute orifices through which the solution is projected in the formation of the filament. Another drawback to this method is that with colored solutions the contents of at least an entire cylinder must of necessity be dyed of the same color, whereas where the dyeing is done in the hank form, amounts of various colors may be dyed at the option of the manipulator, and the depth of shade can be governed closely. For these reasons, the production of dyed silk in this manner from collodion solutions has been almost entirely abandoned. Denitrated collodions have a much stronger affinity for basic dyestuffs than Glanzstoff or viscose silks, and full shades can be dyed direct on the former, whereas the latter must be mordanted, usually with tannin. Substantive colors go on artificial silk too easily

1. E. Jentsch (Färber-Ztg., 1908, **19**, 36) notes that Chardonnet silk is peculiar in that it takes up basic colors without the aid of a mordant; the substantive cotton colors are best absorbed by "Glanzstoff." Chardonnet silk, however, gives fuller and faster dyeings with basic colors when previously mordanted with tannic acid and tartar emetic. Details of the methods of dyeing artificial silk and of the colors most suitable for the purpose are given. It is stated that dyeings with the substantive cotton colors are often "topped" with basic colors in order to brighten them. Shades which appear dull on drying are often brightened by steaming for a short time. In dyeing both Chardonnet silk and "Glanzstoff," the temperature of the bath should not exceed 70°, a lukewarm bath being used at the commencement of the operation. The dyeing usually takes from one to two hours.

and quickly for level dyeing, unless the dyestuff be considerably diluted. Chardonnet silk is peculiar in that it takes up basic colors to full shades without previous mordanting, whereas the substantive colors are best absorbed by Glanz-toff. These observations are explained by the fact that Chardonnet silk is made from nitrated cellulose and therefore probably contains oxycellulose, while Glanzstoff is merely a different form of cotton cellulose. Chardonnet silk, however, gives fuller and faster dyeings with basic colors when previously mordanted with tannin and tartar emetic, the fastness of the shades being better than on mercerized cotton (near-silk or luster). It has been found that where the dye-bath is too hot there is a diminution in luster, while the threads soften and stretch unevenly. It therefore should be handled very carefully at all times, especially when wet, and under no circumstances should it be allowed to lie around wet for any great length of time. When it is remembered that there is a diminution in strength of about 60% shown when in the wet state, the reason for careful handling in this condition becomes apparent. Drying, however, restores the strength of the fiber to its original condition, especially if the fiber has been allowed to absorb from the atmosphere its "normal hygroscopic moisture." The temperature of the dye-bath should not exceed 60°, and is better carried out at about 45–50°. Great care should also be exercised in turning the skeins, on account of their tendering in the wetted condition, more apparent with a rise in temperature of the water. Well polished bamboo sticks and rivetless copper kettles are recommended,[1] although the usual wooden dye-box to the author's knowledge is in daily use with apparent satisfaction. Certain dyestuffs go on artificial silk very unevenly, and this lack of uniformity is not always apparent when using the same dyes,[2] often leaving spots entirely or nearly white. This unevenness has been considered[3] as a demonstration of the heterogeneity of artificial fibers

1. According to F. Beltzer, Mon. Sci., Apr., 1907, 237, commenced Feb. 1907, 88,

2. L.c.; according to W. Minajeff (Z. Färb. Ind., 1909, **7**, 236) comparisons of the action of dyes on Pauly silk and cotton indicates relative to the latter, that (1) the cuticle of the bleached fiber has no influence on the dyeing process, (2) the lamellar structure of cotton plays no part in differentiating its dyeing action from that of Pauly silk, and (3) the canals in the cotton fiber play no important action, mordants and lakes depositing in the canals to only a very limited extent. The determining factors are thickness, density, and capillarity, rather than microscopic structure.

3. V. Clement (Färber Zeit., 1909, **20**, 1) states that all the artificial silks possess the defect, when dyed in bulk or in the cloth, of giving stripes of different intensities of shade. In the collodion silks this defect has been traced to differences in the percentage of residual nitrogen (1.16 to 1.61) remaining after denitration, the darker shades corresponding to higher percentages of nitrogen. In the case of "Glanzstoff" and viscose silks, the darker stripes correspond with a more pronounced oxycellulose reaction. The author thinks that the differences are not due to any irregularities of the chemical treatments subsequent to the formation

as compared with the homogeneity of natural ones. Topping lightly with basic dyestuffs often remedies this difference, and adds brightness and tone to the shade.[1]

In a general way, dyeing with the various sulphide colors, so advantageous with viscose filaments, proceeds the same as with direct or cotton colors, care being taken to keep the temperature below 60°, and using a smaller amount of dyestuff and Glauber salts.[2] The dye-bath should be prepared, heated to the desired temperature, and the dyeing operation proceeded with as promptly as possible. Proper wetting out of the "silk" is very essential, and this means that the temperature of the water should not be below 48°, nor above 60°, the immersion being only sufficiently long enough to permit of thorough wetting of the fibers. Omission of this point is frequent cause of uneven dyeings. The volume of the dye-bath in relation to the amount of silk to be dyed is an important consideration, 3.5 U.S. gal. to each pound of silk being found best suited for all shades and classes of colors, while in dyeing blacks and certain very heavy shades, as bottle greens, dark blue and intense reds and yellows, the proportion of water to silk may be diminished.

The wetted skeins, either before or after mordanting and depending on the class of dyestuff it is desired to deposit on the fiber, is immersed in the warm dye-bath, turned carefully but continuously until the required shade is obtained, taken out and allowed to drain, but not wrung by hand on account of their tender condition, when after cool-

of the threads, but are caused by uncontrolled changes in the cellulose, taking place under the influence of the alkaline agents employed for dissolving the cellulose prior to spinning. The product of every batch is stated to be uniform as regards its dyeing properties, but is always irregular in count ("denier"). Since this cannot be controlled, the skeins are sorted according to "denier" afterward, and skeins from several batches are parceled together, one batch having a different affinity for dyestuffs from another. Artificial silks must be bleached rapidly; alternate treatments with sodium hypochlorite and hydrochloric acid give the best results; the permanganate bleach weakens the fiber. For dyeing, the basic dyestuffs of the "janus" group give the best results as a rule. On collodion silks the "janus" colors give full shades direct, fast to light and to water; the other silks show equally good results on tannin mordants. The "seto" dyestuffs are also good but not particularly fast. Many of the acid dyestuffs are suitable for the direct dyeing of pale shades, fast to light but not to water. The substantive dyestuffs are used very extensively, but are not suitable for "navy blue"; this color is best obtained by janus blue R or indoin blue toned with methyl violet. For black, janus black gives the finest shades. All dyestuffs are somewhat less fast to light on artificial silk than on cotton. The author concludes with a table of tests for the artificial silks. It is difficult to distinguish between "Glanzstoff" and viscose silks; the latter, however, gives a somewhat darker shade with Schiff's reagent than the former.

1. By reason of the threads swelling greatly they take the dye more rapidly than is the case with natural silk, and for light and delicate shades great care has to be exercised not to over-dye.

2. Overheating during drying should be avoided, and under no circumstances should the silk be left in the dry-room after it has become properly dried.

ing to the room-temperature, the hanks are preferably wrapped in cloths and hydro-extracted in a centrifuge. They are then placed in a drying-room heated to not above 40° for the removal of the remainder of the moisture, and when dried are allowed to cool gradually without being touched and to assume their normal amount of moisture from the air before being removed. This is necessary on account of the fact that when deprived of all moisture the filaments are quite brittle, but regain their elasticity upon absorption of moisture again. In dyeing with the direct colors, and less frequently with the basic colors, standing baths are to be used in the same manner as in cotton hank or piece dyeing, the actual value of the partially exhausted bath depending in a large measure upon the volume of business done by the dyer and whether the run on a particular shade is heavy or frequent enough to warrant keeping up a standing bath. The luster may be increased by drying under tension.

Shades that are found after drying to be too deep may be somewhat lightened by a short and very careful process of steaming, while conversely, shades that are considered too light may be intensified by increasing the temperature of drying, which often has a tendency to darken the shade. Sodium carbonate facilitates the application of the substantive dyestuffs, and Monopol soap or Turkey-red oil favors the production of evenness in dyeing and a soft feel. Washing in cold water should follow dyeing, and then a cold bath containing, for brightening purposes, acetic acid and a trace of soap. A little acetic acid may be added to the dye-bath, but no soap, Turkey-red oil or other softener must be added at this stage, for they form a dull lake with the basic colors.[1] Dry artificial silk is said to absorb 16% of its own weight of moisture as against 11% by natural silk. Arti-

1. E. Mertz (F.P. 364913, 1906) has devised a process for dyeing artificial silk wound on bobbins by machinery. The bobbins carrying the material are supported at each end by bearings fixed to two endless vertical chains. These chains can be revolved intermittently by means of gearing connected with a lever-and-cam arrangement. The edges of the bobbin reels are in contact with a vertical plate faced with caoutchouc, and placed on one side of them. The reels press against this, and are thus caused to revolve on their axes during the upward motion. The liquid to be applied is forced over the uppermost bobbin through a perforated pipe, and is caught in a vessel placed beneath the bobbin. This vessel is also perforated, and the liquid thus falls on to the next lower bobbin, and so on to the bottom. The material is thus submitted to a liquid becoming more and more pure as it rises to the top of the machine. The bobbins are removed at the top, and fresh ones inserted at the lower part of the endless chain.

According to E. Dierichs (D.R.P. 211956, 1907) dyed cotton fibers are woven with undyed artificial silk, and the fabric thus obtained is treated with an alkaline solution, whereby the color is partially discharged from the cotton and is taken up by the artificial silk. An example is given in which two lots of cotton are mordanted with tannin and dyed with methylene blue and brilliant rhoduline red; the fabric made from these and the artificial silk is treated for half to three-quarters of an hour, at 40–50°, with a 1% solution of sodium sulphide.

ficial silk cannot be weighted as the natural silk, due to at least two causes—the fiber will not absorb the metallic oxides, and even if it did, its nature is such that it will not stand the temperature, nor the handling necessary. When the artificial product is "horsed" lightly after drying, it has a luster superior to that of natural silk, and to give it a "scroop" also, it may be passed through a soap bath, and afterward through a dilute solution of acetic, or better, tartaric acid.[1]

There is no one manufacturer's series of dyestuffs markedly superior for artificial silk dyeing. V. Clement[2] especially recommends the

1. The luster of artificial silk, especially where developed to the maximum by tension during drying is somewhat metallic on account of double refraction, seen more conspicuously with the cellulose nitrate silks. This double refraction causes many dyes to fluoresce on artificial silk to such an extent as to preclude their use. The difference between the price of artificial silk and the natural product is in reality not so great as would at first appear, on account of the fact that the first named has a greater specific weight and more transparency than the second. As a consequence, a correspondingly greater amount of artificial silk is required to supply the same covering power given by natural silk. For passementerie, where the silk is employed massed thickly and embedded, this characteristic is of very little importance; indeed, artificial silks are used largely to replace in part or wholly, weighted natural silks. The tensile strength of artificial silk is also lower in the dry state than that of the natural product, and becomes much lower still when damped; dyeing in machines consequently presents some difficulties.

2. L.c., has found that for general purposes the basic dyes are very suitable, and particularly the janus colors of the Hoechst works, the dual character of which in behaving as basic dyes and as the substantive dyes makes them very serviceable; also the seto dyes of the Geigy works, which, when regarded chemically, resemble the acid coloring matters. The first-named supply on collodion silk, without any mordant, colorings that are fairly fast to water; they also give deep shades on the cellulose silks. Setoglaucine and setocyanine of the second class have to be singled out for mention, on account of the facility with which very level dyeings may be obtained, though the colors possess no particular degree of fastness.

Collodion silk may be dyed directly in very deep shades, but the cellulose silks in light and medium shades only. For deep shades on the latter, and also if fastness to washing be demanded, a preliminary mordanting with tannin is necessary. The material, however, should not be steeped overnight in the tannin; as a matter of fact, an immersion extending to one or two hours is quite long enough, this to be followed by squeezing and a passage through a cold bath of tartar emetic. It is useful at times to diminish the affinity of the tannin for the fiber by employing it in a cold solution. A goodly number of acid dyes are available for the dyeing of artificial silks. Foremost are quinoline yellow, victoria yellow, orange 2 and 4, metanil yellow, brilliant orange, brilliant croceine, phloxine, acid rosamine, fast acid violet, soluble blue, patent blue, erioglaucine, eriocyanine, and acid violet. These coloring matters serve for the production of a variety of shades mostly in pale tones, and also for bright red, though these are fast neither to light nor to water. When incompletely denitrated, collodion silk fixes the acid dyes in a fashion to give shades fast to soaping, but not when completely and sufficiently denitrated.

In a general way both collodion silk and the cellulose silks behave similarly toward the acid dyes. The basic dyes, the janus dyes, and the acid colors are each applied in the same manner. The material is first damped in tepid water and entered into the dye-bath acidified with acetic acid or alum; the solution of the coloring matter is then added, and the silk dyed for a quarter of an hour in the cold, and for a further half hour at a temperature of 30–60°. It is then removed, washed lightly, and squeezed with care. The substantive dyes are applied from a bath containing common salt and sodium carbonate for about three-quarters of an hour, the temperature of the bath being gradually raised during that period to 60°. The presence of soap in the bath favors the manipulation of the material and softens the fiber, but does not prevent the occurrence of streaky dyeings. For a marine

janus and seto dyes, but the diamine [1], and other [2] basic and direct blue, none of the substantive dyes is suitable, a much better color being obtainable by the use of janus blue or indophene blue and methyl violet. The sulphide dyes are applied from a cold bath containing, besides the color, sulphide of soda, sodium carbonate, and a small proportion of common salt. The browns and some other shades may be used without danger, but the blues and blacks affect the brilliancy and the handle of the fiber. Colors produced with the aid of the acid dyes, the basic dyes on unmordanted material, and the janus dyes on the cellulose silks, are not fast to water.

1. The direct colors recommended for use comprise: diamine rose BG and BD, fast benzo rose, brilliant geranine G, B and 3B, diamine fast scarlet GB, GG, 4B, benzo fast scarlet GS, 4BS, 5BS, and 8BS, diamine fast red F, diamine brilliant bordeaux R, benzo fast red, thioflavine S, diamine yellow CP, diamine fast yellow FF, diamine orange, oxydiamine red, triazol yellow, chloramine yellow and orange, diamine green B, diamine dark green, benzo green, diamine blue, diamine fast blue, oxy diamine blues, benzo brilliant blue 6B and brilliant azurine.

For drabs and like compound shades: diamine blue black B, oxydiamine black JE, brilliant benzo blue 6B, chloramine yellow M, geranine and pluton brown.

For browns: diamine browns, oxydiamine brown G, diamine catechine G and pluton browns, shading when necessary with yellow or black. When it is required to call into use the basic colors, the artificial silk is mordanted in a bath at 60°, containing 1–4% of tannin, and is worked therein for a short time and left under the liquid for two hours; it is then centrifugally hydroextracted and treated for about half an hour in a 1 or 2% bath of antimony salt.

The basic colors found useful are: nile blue B, turquoise blue BB and G, methylene blue BB, victoria blue B, new methylene blue N, indazine M, new victoria blue F and R, crystal violet 10B, irisamine G, methyl violet 7B, 2B and R, brilliant rhoduline R, tannin heliotrope, brilliant green, malachite green, fast green; and for shading the greens: thioflavine T and rhoduline yellow 6B.

According to C. Suvern in using the diamine colors for either Chardonnet, cellulose, or viscose silk, soap is added to the dye liquor to soften the material and facilitate the exhaustion of the dye. The amount of liquor for ordinary colors is 30 times the weight of the material. For dark shades and black the proportions vary between 20 and 25 to 1. For bright shades, an addition of 1% of calcined soda and 2% of soap is recommended. The material is treated for one-half hour at 55°. For bright and medium shades, 1% of calcined soda, 2% of soap, and 5% to 10% of Glauber's salts are added. The temperature is brought to 55°; this is slowly raised to 60°, and the material handled for thirty to forty-five minutes. Black can also be dyed at 60°. The dye-bath, particularly for sulphur shades, is not exhausted, and consequently the liquor can be used again to advantage. When using a standing bath, three-quarters of the regular amount of dyestuff is used for light colors and two-thirds for black, along with one-fourth of the original quantity of soap, soda, and Glauber's salts. The colors obtained with basic dyes are developed to some extent by an after-treatment in a solution of acetic acid. Diazotized and developed colors are obtained on artificial silk by the methods used for cotton.

2. Among those especially suitable may be mentioned the basic dyestuffs: auramine O, II, G; brilliant phosphine 5G, 3G; brilliant phosphine G; patent phosphine G, GG, R; chrysoidine G; bisma[illegible] brown G, R; safranine G 000, B 000; rhodamine 6G, B, S; diamond magenta; ce[illegible] violet 3R, 4B; crystal violet 5BO; ethyl violet; methylene blue G; fast green C, I, JJO; new fast green 2B, 3B; jute black N, V, GN.

The acid dyestuffs particularly suitable for pale shades and for mixtures, are: azo yellow O, I; orange II; rocceline; acid violet 3BN, 4BN, 7B; wool green S; gray R, B, BB.

Among the direct or substantive dyestuffs are: chlorantine yellow JG; chlorantine yellow JJ; cotton yellow CH; chlorantine orange TR; chlorantine orange TRR; direct orange G, R; cotton red 11B 1436; direct safranine, G, B; chlorantine red 4B, 8B; chlorantine pink; chlorantine lilac R, B, BB; direct brown M; cupranil brown G, R, B; chlorantine brown R, B, BB; chlorantine lilac B, BB, R; chlorantine violet B, R; acetylene blue 3R, 6B; acetylene pure blue; direct sky blue, green shade; acetylene sky blue; carbide black S; direct green B695; direct

dyestuffs are probably equally applicable. The dyeing of straw hats and similar heavier material made from artificial ribbons, horsehair and tubes has recently assumed considerable importance.[1] It has been noted[2] that artificial fibers, which have been treated with aldehydes (formaldehyde) followed by the action of acids or other dehydrating agents, and then washed and dried, have little affinity for dyestuffs. They may, however, be readily dyed if they are first treated with solutions of alkali hydroxides, with or without addition of oxidizing agents, such as hypochlorites. The caustic alkali solution may vary in strength from 1 to 35%, the duration of the action depending on the strength used, but it is preferable to use the more dilute lyes, since the stronger ones cause shrinkage of the fibers unless they are kept under tension during the process.

Properties of the Artificial Filaments.[3] The more closely these threads approach in appearance and properties that of natural silk, the more importance will be attached to methods for differentiating between them. Saget and Suvern,[4] A. Herzog[5] and C. Hassack[6] have

gray B, R; dianil yellow 3G, R, 2R, pat.; dianil direct yellow S, oxy-dianil yellow O; aurophenine, O; cresotine yellow G; dianil orange G pat., N; toluylene orange R; brilliant dianil red R; delta purpurine 5B; dianil red R, 4B, 10B; dianil claret red B, G; dianil blue pat., all brands; dianil dark blue R, 3R, pat.; dianil brown 3GO, R, BD; dianil fast brown B; dianil black pat., all brands, particularly CR and CB.

1. A considerable proportion of ladies' light summer hats which appear to command ready sale on account of their beautiful luster and light texture, are, according to E. Wilkinson (Dyer and Calico Printer) made of artificial fibers, especially cuprammonium silk. The hats are not able to withstand rough treatment, and a shower of rain is often sufficient to spoil their appearance. Often they are dyed without regard for fastness, the chief points observed being to produce the mode shades with great exactness in matching and sufficient fastness to the hot pressing which each hat must undergo before is it offered for sale. These "Glanzstoff hats" are dyed—or more properly colored—by simple immersion of the hat in an alcoholic solution of the dyestuff. The basic colors are generally used on account of their bright hues and ready penetration. The most important consideration is to select dyes fast to the temperature of hot pressing in which the hat is given its form. Chrysoidine, which resists the heat when dyed on cotton, turns brown when subjected to the same temperature on artificial silk. Magenta with similar treatment turns a dark, dull violet. Chrysoidine may be replaced by such a color as tannin orange paste, and magenta by the safranines. Artificial silk hats are stiffened with shellac before—not after—dyeing, and may therefore be pressed as soon as dry after dyeing. If not shellacked beforehand, uneven dyeing is apt to result. If in dyeing dark shades the hats "bronze" this may be remedied by wiping with an oily rag. The following dyestuffs are said to be particularly satisfactory for this work: safranin S 150, irisamine, paraphosphine G, tannin orange R paste, brilliant green crystals, new methylene blue 3 R.

2. Fürst Guido Donnersmarch'sche Kunstseiden- u. Acetatwerke, D.R.P. 219818, 1908. For reasons for "Faulty Artificial Silk," see S. Culp, Färb. Ztg., 1910, **21**, 141.

3. See W. Massot, Färb. Ztg., 1909, **18**, 146, 166, 182; in which the physical and microscopic characters are given, and illustrated by photo-micrographs.

4. Bull. Soc. d'Encouragement, 1906, 540.

5. Lehne's Färb. Ztg., 1894–5, 49; Oest. Chem. Ztg., 1906, **9**, 166. See "Die Unterscheidung der Natürlichen und Kunstlichen Seiden," Herzog, 1910, pp. 78; Theodor Steinkopff's Verlag. For reactions of artificial silk, Mon. teint., 1901, **48**, 56; Pharm. Centralh., 1904, **45**, 118.

6. Oest. Chem. Ztg., 1900, No. 1.

studied these differentiations—the latter microscopically—from which sources the following observations may be recorded. Hassock has shown that microscopical examination alone is sufficient to distinguish natural from artificial silk, since all forms of the latter have much coarser filaments, the relative diameters in micromillimeters being:[1]

	Mean.	Maximum.
	μ	μ
Chardonnet silk	45 to 60	100
Fismes silk	40 to 80	120
Lehner silk	60 to 90	135
Pauly silk	40 to 50	75
Gelatin silk	60 to 80	85
Genuine silk	9 to 15	20

Genuine silk can also be immediately differentiated from the artificial by the uniform thickness and roundness of the fiber and with but a few cross stripes, while artificial filaments lack this uniformity, being considerably thicker in some places than in others, as a rule not perfectly round, and often angular, distorted and more or less flattened, especially those Chardonnet silks which have been coagulated in a fluid medium, as distinguished from the filaments produced by "dry spinning," i.e., solidified by exposure to the atmosphere only. The Glanzstoff silk is much more uniform in appearance, approaching more closely a cylinder in structure. Fismes and Walston nitrocellulose silks, as examined by Hassock, resemble Chardonnet filaments under the microscope, Fismes being more conspicuously furrowed lengthwise of the thread. He claims the Chardonnet, Fismes (Du Vivier) and Walston nitrocellulose silks can only be distinguished from each other microscopically by means of the appearance of cross-sections, the latter being readily obtained either by imbedding the filaments in paraffin or gum solution and after hardening, cross-sectioning with a sharp razor, or better, with a microtome. Chardonnet fibers appear somewhat flattened, indented on the surface with minute canals in the interior, and are irregular. Fismes shows for the most part irregular and many-shaped forms, which always contain one or more sharp indentations. The English filaments (Walston) are much more conspicuously flattened and unevenly jagged. The Lehner silk examined by Hassock showed either a broad indented canal, ridged in the middle or at the sides, in which air bubbles are frequently visible, these bubbles being elongated in the longitudinal direction of the filament, indicating the same had been drawn out after spinning and before coagulation. Often could be observed

1. These results are for filaments in a swollen (by water) state. To obtain the air-dry diameters, from 25–33% should be deducted from the figures given.

several heavy, lengthwise lines, usually running in pairs, which cause the edges of the canal-like threads to unite over the canal. Nearly all of the fibers upon sufficient magnification show clear, very closely situated, short stripings or clefts, which could be readily traced to numerous small air bubbles which were contained in the spinning substance and drawn out during the strain after spinning. These bubbles varied from 3–10μ long and 1–3μ wide. When these fibers are swollen in Sweitzer's reagent, the fine interior cracks apparently swell into bubbles, inclosing fluid.

Lehner filaments appear jagged, especially in the clefts, and are distinguished by their peculiar cross-section forms, being often in the shape of the letters *V* or *L*, with deep convolutions. The Glanzstoff fibers, which usually consist of from 15–18 filaments, are much more even in structure and shape than the collodion silks, nearly all forms being cylindrical and seldom appreciably flattened, their surface often showing large numbers of finely striated cuts. Air bubbles are infrequently noticed, although sometimes arranged in long chains. In all fibers upon focusing with the medium adjustment extremely delicate radiating lines may be observed in the middle of the fibers, apparently the result of uneven coagulations of the spinning fluid. In many places two obliquely running lines may be detected, undoubtedly caused by the crossing of two threads in the collector. They resemble the crossings in Tussah silk which are caused in the same way. A cross section shows Glanzstoff filaments nearly round, or rounded corners, seldom flattened, and the average diameter far more uniform than the various nitrocellulose silks. The gelatine silks are apparently without distinguishing markings, in cross-section circular, even, with but few bubbles and no striations.

Polarized Light. With the exception of threads prepared from gelatin, artificial silk may be distinguished from the natural fiber by its double refraction of light. Höhnel,[1] E. Hanausek,[2] C. Hassock,[3] Chardonnet and others have studied this phenomenon care-

1. F. v. Höhnel, "Die Mikroskopie der technisch verwendeten Faserstoffe," p. 153.

2. "Mittheilungen aus dem Laboratorium f. Warenkunde a. d. Wiener Handelsakademie," 1890.

3. C.R., 1889, **108**, 962. Hassock (l.c.) claims that in the dark field of vision of polarization the cellulose silk of Pauly appears brighter in the middle and thickest parts and toward the edges changing to bright yellow, which is a proof of the even thickness and cylindrical form of the threads. Where two threads cross, beautiful steel-blue to purple tones appear, corresponding to the greater thickness of the substance. The collodion silks of Près de Vaux (Chardonnet), Fismes and Walston, seldom show even coloring for any considerable distance, different tones appearing in stripings corresponding to the uneven nature of the cross-sections, in this respect being similar to Tussah silk. At those points where the threads turn their small side toward the eye, green to blue polarization colors

fully, the general consensus of opinion being that although genuine silk possesses the power of refracting light, but to the practiced observer the differences between the natural and artificial fibers are readily apparent. A thread of geniune silk in the polariscope always shows the same relative color dispersion when placed in the same position, the color usually being blue or green when the flattened side is toward the observer.

Tenacity and Durability are exceedingly important properties of these fibers, since upon them depend the durability of the fabrics manufactured from them. And it is in these constants that the inferiority as compared with natural silks is most evident. The Bull. of the Imperial Inst. give results of some tests of breaking stresses, given in kilos per square mm.,[1] which are identical with those of Strehlenert and Westergren cited below. R. Bernard[2] records the following figures, in which it will be noted that the process of denitration decreases materially the elasticity and tensile strength of the filaments. This diminution of resistance of the nitrocellulose

	Breaking Strain.	Elongation of Fiber at the moment of rupture.
Nitrocellulose spun (Chardonnet)	150 gm.	23%
Nitrocellulose denitrated and dried	110 "	8%
Nitrocellulose denitrated and wet	25 "	....
Nitrocellulose spun (Bronnert)	125 "	28%
Nitrocellulose denitrated and dry	115 "	13%
Nitrocellulose denitrated and wet	32 "	....
Natural silk	300 "	18%

	Breaking Strain. Average of 20 trials.
Skein of bleached cotton (Hauschild) without treatment	825
Skein of bleached cotton (Hauschild) without treatment, moistened	942
Skein of bleached cotton after hexanitration (by the concentrated sulphonitric mixed acids in the cold), dry	884
The same after hexanitration, only wet	828
The hexanitrated cotton denitrated, dry	529
The hexanitrated cotton denitrated, wet	206

may usually be seen. Lehner silk shows the most and brightest colors upon polarization, caused by the variation in cross-sections and the varying thickness in the diameter of the filament. In the thicker portions, colors of a higher order appear, as in those places where two threads cross. Cross-sections of artificial silks appear in the dark field in bright colors but different shades on account of the varying thickness of the cross-sections. Those of gelatin silk remain dark.

1. Supplement to the Board of Trade Jour., 1905, **2**, 266.
2. Mon. Sci., May, 1905, in Jour. Soc. Dyers and Col., 1905, **21**, 167.

caused by denitration, corroborates the opinion of Blondeau, that nitration modifies the structure of the cellulose. Strehlenert and Westergren[1] in a communication to the Chemical Society of Stockholm, submitted the results of a comparative examination of the various types of artificial silk and of the processes by which cellulose is converted into this form. They record their opinion as to the relative advantages of the viscose method, an important factor being that wood pulp is the most suitable raw material for this process, and that it further offers the prospect of working up the waste wood, which in the Scandinavian pulp industry amounts to over 40% of the wood felled.

The following results of determinations of breaking strains are recorded:

	Absolute Breaking Strain in Kilos per sq. mm.		Loss per cent
	Air Dry.	Wet.	
Natural silk—			
China raw silk	53.3	46.7	14.1
French " "	50.4	40.9	18.8
" silk, boiled off	25.5	13.6	46.7
" " dyed red and weighed	20.0	15.6	22
" " blue black, 110%, weighting	12.1	8.0	33.9
" " black 140% weighting	7.9	6.3	20.3
" " " 500% weighting	2.2	....	....
Collodion silks—			
Chardonnet, undyed	14.7	1.7	89.6
Lehner, undyed	17.1	4.3	74.8
Strehlenert, undyed	15.9	3.6	77.4
Pauly, undyed	19.1	3.2	72.7
Cross and Stern, viscose	11.4	3.5	70.0
Cross and Stern, latest viscose "silk"	21.5	3.5	84.0
Cotton yarn	11.5	18.6	83.0

Hassock determined the tenacity by means of breaking-strain tests[2]

1. Chem. Zeit. 1901, **25**, 1900; abst. J.S.C.I., 1902, **21**, 113; Bronnert (Bull. Soc. Ind., Mulh. 1900) in an isolated test, found 77% loss in strength on wetting Chardonnet silk. J. Gebauer (F.P. 403264. 1909) seeks to improve the elasticity and resistance to water of artificial silk by producing a thread of artificial silk and caoutchouc, the latter ingredient being subsequently vulcanized. A solution of caoutchouc may be added to the spinning solution, or the thread or tissue of artificial silk may be passed through the caoutchouc solution. Vulcanization is carried out in the ordinary way with sulphur chloride. (See S. Torii, F.P. 407345, 1909.)

2. The method used was to place pieces of genuine silk and artificial silk filaments in a tensile-strength machine in such a manner that a free thread of an arbitrary but always the same length (in this instance 3.93 inches) lay between the fastening screws when the filaments were pulled out taut but not stretched. The tension was gradually increased until the moment of breaking when the elongation

the results being several times repeated, the arithmetical mean of which are appended below:

Genuine silk (Piemont-Organtin)	21.6 per cent.
Chardonnet silk from Près de Vaux	8.0 "
Collodion silk from Fismes	11.6 "
Collodion silk from Walston	7.9 "
Lehner silk	7.5 "
Pauly's cellulose silk	12.5 "
Gelatin silk	3.8 "

In order to compare the results directly with genuine silk (the sample being of medium tenacity and the titer 22–24 denier), the calculations are recorded in the following table, the relative tearing resistance being calculated in the last column on the basis of a unit titer of 100 denier.

Quality.	Denier.	Breaking Strain in gm.	Do. per Denier in gm.	Elasticity, per cent. (Genuine Silk = 100.)
Genuine silk	23	57.5	2.5	21.6
Chardonnet silk	80	74.2	0.93	8.0
Fismes	100	71.7	0.71	11.6
Walston	120	151.4	1.26	7.9
Lehner	120	171.8	1.43	7.5
Pauly	120	197.6	1.64	12.5
Gelatin	100	63.0	0.63	3.8

Recent figures given by the testing department of the Manchester Chamber of Commerce show the following results:

Yarn.	Dry Strength.	Wet Strength.	Loss Per Cent.
Glanzstoff	92.5	31	66
Cellulo silk	75.5	33	56

According to these figures the Glanzstoff product now loses 17% less "on wetting" than in 1901. The Cellulo silk product loses still less. The present-day strength (dry) is given by Cross and Bevan at 1.0–1.4 gm. per denier, against 2.0–2.5 gm. for real silk.

W. Dreaper reports having received a sample of 25 denier artificial thread containing 60 filaments and having a breaking strain of 58.5 gm., indicating a breaking strain of 2.3 gm. per denier, which is not inferior to some silks. He has given the following figures, which indicate for the same make of silk an important increase in strength

and weight required to break the filament were carefully noted. After each test the fiber was examined under the microscope and the individual filaments composing it counted, in order to express the results per unit filament.

for the finer sizes per unit weight of thread (denier) and with it a "decrease in elongation before breaking," the latter figure not necessarily indicating that the elasticity is decreased:

Size in Deniers of Artificial Filament	Per cent. Elongation Before Breaking.	Breaking Strain per Denier in Grams.
20	9.0	...
40	10.5	2.7
60	12.5	1.7
80	14.	1.5
100	15.	1.3
120	16.	1.2
140	16.5	1.1

Moisture. The investigations of Hassock on the moisture and hygroscopicity of artificial filaments are appended below, the first table giving the results of the determination of moisture calculated to 100 gm. dry substance, as follows:

	Moisture in per cent.
Indian raw silk	8.71
Près de Vaux silk (Chardonnet silk)	11.11
Fismes silk	10.92
Walston silk	11.32
Lehner silk from Glattbrugg	11.45
Pauly cellulose silk	9.20
Gelatin silk	13.98

The hygroscopicity was determined by the difference in weight between artificially dried samples and the same sample after exposure to an atmosphere saturated with steam for a period of twenty-four hours.[1] The percentage absorption of water was as follows:

Italian raw silk	20.11
Près de Vaux silk	27.46
Fismes silk	27.12
Walston silk	28.94
Lehner silk from Glattbrugg	26.45
Cellulose silk	23.08
Gelatin silk	45.56

1. The Textile Ztg. (1904, No. 35) states that at the Elberfeld-Barmen silk conditioning establishment, artificial silk is found to be as hygroscopic as ordinary silk. As the result of several hundred tests the amount of moisture was found to vary between 9.30-12.99%, giving an average of 11.30%. Having been granted permission by the government, this conditioning establishment now undertakes the valuation of artificial silks on the basis of 11% moisture. Besides moisture, the net weight, counts, twist, elasticity, and tensile strength, are determined, and especial attention is devoted to the question of inflammability, since in Germany users of artificial silk made from nitrocellulose have to pay an unjustifiably increased premium to the private insurance companies. Undenitrated artificial silk consists of only 2-3.5% moisture. Herzog (Färb. Ztg. 1895, 6, 49) found that in a room of average dryness, dry artificial silk absorbed in two hours 16% of moisture.

The tenacity of different artificial filaments as compared with genuine silk is given below, from which it will be noted that no artificial silk has been produced possessing more than two-thirds of the tenacity of genuine silk.

Genuine silk	100
Chardonnet silk	44
Vivier silk	29
Pauly silk	45 to 50
Lehner silk	68

The Specific Gravity of artificial filaments is 10-13% higher than natural silk, gelatin silks, however, having about the same density. The ash is generally under 2%. Whereas natural silk contains about 17% nitrogen, the artificial fibers contain much less, as noted from the following:

Nature of Yarn.	Per cent.
Pauly make (Cuprammonium)	.13
Chardonnet (Nitrocellulose) French	.15
" " German	.16
Lehner "	.07
Nitrocellulose	9.15 to 14.14

The diphenylamine test for artificial silks gives the following reactions:

Silk	Brown coloration.
Tussah silk	Intense brown.
Chardonnet and Lehner (Nitrocellulose)	Intense blue.
Pauly, Viscose or Yarmouth silks	No reaction.

The peculiar rustle (scroup) which silk possesses when loaded with certain metallic salts is closely imitated when the artificial filaments are similarly treated, in which respect the behavior of the two classes of fibers is identical. The brilliancy of fiber in the coarser counts is decidedly greater than natural silk, and apparently the Glanzstoff silk is superior in this respect to the nitrocellulose silks. It is difficult to make close comparisons on account of the fact that the luster and resplendency may be greatly modified by previous mercerization or drying the filaments under considerable tension. The brilliancy of the cellulose nitrate filaments depends in a great measure on the care and method of denitration.

The covering power of artificial silk is but 50-60% that of real silk, mainly due to the relatively larger size of the individual filaments.

The defects which may be said to interfere with the universal use of artificial filaments for all the uses to which natural silk is put is, according to W. Dreaper [1] comprehended in the following:

(1) The size, or denier of the threads is too great.

1. Jour. Soc. Dyers. Col., 1907, **23**, 7.

(2) The filaments which make up these threads are much larger than the real silk ones.

(3) Strength, and elasticity are not satisfactory, especially the latter.

(4) The loss of strength on wetting is excessive.

(5) The lack of covering power reduces the value of the product.

The combined effect of these defects removes these products outside the limits of ordinary dress materials. On the other hand, the harsh feel is not considered a defect in the manufacture of braids, etc.

Chemical Properties of the Artificial Fibers. C. Suvern (l.c.) and C. C. Hassock (l.c.) have made exhaustive comparisons of the deportment of natural and artificial silks with various reagents, in attempts to differentiate these two classes of fibers by means of well-defined chemical reactions. China and Tussah natural silks and the artificial filaments prepared according to the methods of Chardonnet at Besançon and Spreitenbach, Lehner's product, and the filaments produced by the cuprammonium methods of Pauly Bronnert, Fremery and Urban were compared under similar conditions, that small differences might be more apparent. As these investigations form the most complete research on this subject so far appearing, their composite results are given somewhat in detail.

(1) *Potassium Hydroxide* solution of maximum concentration dissolves the natural silks, Tussah less readily, but completely on boiling, the cellulose "silks" becoming discolored, gelatinized, and transparent, but incompletely dissolving except upon long boiling. Lehner and Pauly filaments were most resistant.

(2) *Potassium Hydroxide* 40% solution completely dissolves China silk at 65–85°, Tussah being more resistant, swelling considerably at 75°, and passing completely into solution at 100–120°. The cellulose filaments began to swell at the room temperature, but resisted the influence of the alkali for considerable time. Pauly silk fast discolored but showed no swelling, being least affected by this treatment. Chardonnet Besançon was most susceptible to treatment with 40% KOH solution.

(3) *Zinc Chloride Solution* 60% (not 40%). The samples were all shaken with zinc chloride solution in test tubes, and heated in a bath of concentrated sulphuric acid. China silk was readily affected, Tussah less easily, the artificial silks offering more resistance at 100°, especially the Pauly, which dissolved only at 180°, the collodion products passing into solution at 140–145°. No violent foaming of the silks was noted, as stated in the literature. With this method of examination very prominent differences appeared. Tussah and the

collodion silks forming one group dissolving at 145°, as against China silk at 120°.

(4) *Alkaline Copper* solution in glycerol prepared by dissolving 10 gm. copper sulphate crystals in 100 cc. water, adding 5 gm. glycerol and 10 cc. of 10% KOH aqueous solution. The precipitate of cupric hydroxide first formed with the alkali just redissolved upon addition of 10 cc. total KOH solution. In this solution China silk dissolved while the others were inappreciably affected, even at the temperature of boiling.

(5) *Ammoniacal Nickel oxide* solution was obtained by saturating nickel sulphate with an alkaline hydroxide, washing the nickel hydroxide and redissolving the precipitate in the minimum of ammonia. China silk readily dissolved at room temperature, and completely on boiling, the other samples being unaffected.

(6) *Cuprammonium Solution,* prepared by dissolving well-washed cupric hydroxide in 24% ammonia. In this reagent the China silk only was dissolved, the others undergoing no appreciable change.

(7) *Fehling's solution.* Natural silks dissolved clearly, Tussah with difficulty, the artificial fibers being unaffected.

(8) *Concentrated Nitric Acid* decomposed China silk in the cold, Tussah still more readily, the artificial silks remaining unchanged for a considerable time. All dissolved on boiling, the Pauly with a dark yellow color.

(9) *Chromic Acid* solution 4% and 20%. The weaker solution had no apparent effect on any, even at boiling. 20% solution at boiling dissolved all but Tussah, the latter retaining a loose thread-like structure.

(10) *Millon's Reagent,* at boiling, both natural silks gave a violet color, while the four artificial silks showed no change.

(11) *Iodine* in potassium iodide solution. The samples were moistened with water and a drop of the reagent added. China silk being colored a deep brown, Tussah a pale brown, the collodion silks first turning brown and then blue. Pauly filaments showed no change.

(12) *Diphenylamine Sulphate.* Diphenylamine was dissolved in concentrated sulphuric acid, 1–2 cc. of the solution poured on a watch-glass with white background, and short threads stirred in with a glass rod. China silk showed light brown, Tussah heavy brown, Besançon, Spreitenbach and Lehner showed dark blue with a strong nitro reaction, while Pauly filaments gave no change.

(13) *Brucine Sulphate,* in concentrated sulphuric acid gave but slight browning with the natural silks, the nitro-silks a deep red color, Pauly silk no change.

(14) The natural filaments are more resistant when chewed than the artificial.

(15) *Determination of Moisture.* 5 gm. of each kind when dried at 99°, until no further loss in weight occurred gave the following results:

China	7.97%	water.
Tussah	8.26%	"
Art. silk Chardonnet Besançon	10.37%	"
" " Spreitenbach	11.17%	"
" Lehner	10.71%	"
" Pauly	10.04%	"

(16) *Hygroscopicity.* The samples previously dried at 99° when exposed to the atmosphere for the time stated increased in weight as follows, 5 gm. samples being taken:

	China gm.	Tussah gm.	Chardonnet B. gm.	Chardonnet S. gm	Lehner gm.	Pauly gm.
After 15 minutes	0.0052	0.0145	0.0091	0.0066	0.0071	0.0120
" 1½ hours	0.0098	0.0367	0.0320	0 0334	0.0314	0.0400
" 17 "	0.0520	0.1546	0.1394	0.1490	0.1572	0.1910
" 24 "	0.0452	0.0442	0.1015	0.0995	0.1026	0.1040
Total after about 43 hrs.	0.1122	0.2500	0.2820	0.2885	0.2983	0.3470

The percentages are obtained by multiplying the weights given by 2 and moving the decimal point one place to the right. The results show that China silk after forty-three hours was unable to absorb only about half as much water as the Tussah and artificial silks.

(17) *Behavior on heating to* 200°. After heating the dried samples to 200° for two hours, China silk was considerably browned, Tussah apparently suffering no change. The nitro silks were carbonized to blue-black coals, but retained their thread-like form. Pauly silk appeared bright yellow and was not charred. The loss in weight by this treatment is as follows.

	Grams.		Per cent.
China decreased about	0.1592	equal to	3.18
Tussah " "	0.1475	" "	2.95
Chardonnet Besançon decreased about	1.6640	" "	33.28
" Spreitenbach " "	1.7065	" "	34.13
Lehner decreased about	1.3278	" "	26.56
Pauly " "	0.0808	" "	1.61

(18) *Ash.* The percentages obtained are as follows:

China	0.95 %	Ash.
Tussah	1.65 %	"
Chardonnet Besançon	1.60 %	"
" Spreitenbach	1.03 %	"
Lehner	1.43 %	"
Pauly	0.096%	"

The ash of Pauly silk is remarkably low.

(19) *Nitrogen* determinations resulted in the following figures:

China	16.60%	Nitrogen.
Tussah	16.79%	"
Chardonnet Besançon	0.15%	"
" Spreitenbach	0.05%	"
Lehner	0.07%	"
Pauly	0.13%	"

According to C. Schwalbe [1] the methods of Süvern just enumerated for testing artificial silks are not altogether trustworthy. As a means of distinguishing between Chardonnet, Pauly, and viscose silks, Fehling's solution and a solution containing zinc chloride and iodine are recommended. If 0.2 gm. of each of these silks be treated in separate test-tubes with 2 cc. of Fehling's solution, the Chardonnet silk, owing to its reducing action, imparts a green color to the liquid, while the liquid in the other two tubes remains blue. To distinguish between Pauly and viscose silks, equal quantities of these are treated with a solution containing 20 gm. of zinc chloride, 2 gm. of potassium iodide and 0.1 gm. of iodine dissolved in 15 gm. of water. The silks are then washed with water. Both silks become at first somewhat colored, but whereas the viscose silk keeps its color (bluish-green) for a long time, the Pauly silk quickly loses its (brown) color during the washing.

A simple way to determine the presence of artificial silk in a fabric without the use of reagents, it is said, is to submit a weighed cutting of the fabric to a temperature of 200° for ten minutes. On being subsequently rubbed, any artificial silk present is said to drop out as dust, the percentage of which can be ascertained by reweighing.[2]

According to Coppetti [3] the usual tests for distinguishing between natural and artificial silks frequently fail when the fabrics are weighted and dyed, and there are very few methods available for stripping the loading and dyestuff from the silk without destroying the fiber. The author has found that hydrofluoric acid is an excellent stripping agent, which readily removes the most refractory of the mineral loadings commonly employed. The fabric is steeped in hydrofluoric acid of the ordinary commercial strength for five to ten minutes; it is then washed and heated in a solution of soap to the boiling point. It is washed again and placed in a 5% solution of hydrochloric acid, with which it is boiled. Next it is bleached in a solution of sodium

1. Färb. Ztg., 1907, **18**, 237; Wochbl. Papierfabr., 1908, **38**, 3913. See Schwalbe, F.P. 410460, 1909.

2. This test presumably applies to the nitrocellulose silks, rather than the cuprammonium or viscose silks.

3. Ann. Chim. analyt., 1909, **14**, 47.

hypochlorite, again acidified, then washed and dried. An alternative method of bleaching, according to the nature and intensity of the dyestuff, consists in treating the fabric with a permanganate solution, followed by sulphurous acid. In this way the fibers are obtained practically free from mineral weighting and coloring matters, and the usual tests for the nature of the silk can be applied. When the fibers are sufficiently colorless, nitric acid is the best reagent for distinguishing between the silks of animal and those of vegetable origin; but if the residual color is such as to mask the yellow stain produced by nitric acid, the fibers should be gently warmed on a glass slide with a 20% solution of potassium hydroxide, which dissolves the natural silks and the artificial silks which are composed of gelatin.

W. Minajeff[1] has examined microscopically the dyed fibers of cotton and "Glanzstoff" from which are drawn the following conclusions. The cuticula of the cotton fiber has no influence on the dyeing of that fiber, and the layer-like structure of the fiber walls is also of no substantial importance. The greater density of the cotton fiber compared with that of "Glanzstoff" and also the greater difficulty of penetration by liquids, are of greater importance. The thickness of the fiber has also a special effect on the dyeing of the fiber. The canal of the fiber is of some importance; but its effect is small, since it has been found that on dyeing cotton with mordant dyestuffs, only small aggregates of the color-lake are found in the canal, and that these only exist about the broken ends of the fibers. More importance is attached to the physical properties of the fibers, i.e., rather to the thickness, density, and capillarity of the fiber substance than to the inner structure of the fiber.

Uses of Artificial Silk. In addition to the fields of usefulness already mentioned, it is finding increased employment in lace manufacture, more especially for embroidery lace and the heavier laces and braids used on hats. On the Lever machines it is more difficult to work than cotton or silk filaments, owing to the chafing through the intricate parts of the machine. The objection that the artificial filaments are unable to stand rain or repeated wetting is partially overcome by blending with the natural article. It is also said that by combining a nitrocellulose and silk filament the former adds a very desirable brilliancy, and the latter contributes strength, which adds to its value in laces, passementerie, mousselines, ribbons, gauzes, and trimming material. A new article called chifolineis, a species

1. Z. Färben-Ind., 1908, 7, 63, 81, 236.

of goods manufactured from crin de Chardonnet, is used very largely in the trimming of ladies' hats. The coarseness of the artificial filaments prevents their being used for the production of fine soft textures, such as velvets, duchess, foulards, bengalines and a number of other silk textures. For figuring upholsteries that are not subjected to severe abrasive wear, it has been extensively adopted. On account of the lack of durability of fabrics made of artificial silk alone, pure silk or another fiber is usually woven in the textile as the warp, while artificial silk is used for the woof. At present there is a demand [1] in the United States for a sort of heavy tulle made of ovale of 500 deniers of artificial silk coming from France. This material is used on dresses as a trimming over a foundation of taffetas or satin.

The World's Output of Artificial Silk has recently been stated as 3,500,000 k. per annum, and is rapidly increasing.[2] Comparing this with 1,700,000 k. in 1906, and 600,000 k. in 1896, the increase indicated is nearly 600% in thirteen years. The nitrocellulose silks come first with an estimated output of between 1,500,000 and 1,800,000 k.; the copper ammonia process in the neighborhood of 1,250,000 k.; viscose silk about 600,000 k. and acetate silk comparatively little. The production of artificial silk [3] in Germany rose during 1908 to about 1,200,000 k.; and the demand has exceeded this, 300,000 k. being imported from Switzerland and Belgium. The value of the silk consumed amounted to approximately $5,000,000. The total production of the world appears to be about 4,000,000 k. Of this quantity the nitrocellulose process, worked in Germany by the Vereinigte Kunstseidefabriken of Frankfort, continues to represent the greater part with about 2,000,000 k., and during 1909 has increased this to an enormous extent; while the ammoniacal copper oxide process of the Vereinigte Glanzstoff-Fabriken of Elberfeld accounts for 1,450,000 k.

The viscose process, which for the first time produced on a large scale in 1907, rose rapidly in importance owing to the fineness and brilliancy of its thread, and represents about 600,000 k. The following table gives the results of the various companies working the nitrocellulose process in 1908:

1. According to U.S. Consul J. Covert of Lyons, France, U.S. Daily Consular and Trade Report 1909, 3131, 11.

2. A. Colin (Rev. gén. Chim., 1909, **12**, 40) gives the 1909 production at four million k. R. Schwarr (Neue Freie Presse, Vienna, Jan. 5, 1909) estimates there are at present (1909) in Europe, 30 producing artificial silk factories, producing in 1907, 3,300,000 k., of which 1,500,000 were nitrocellulose silk, 1,300,000 "Glanzstoff," and 500,000 viscose silk.

3. Chem. Trade Jour., 1910, Jan. 8.

Nitrocellulose (Chardonnet) Process

Companies.	Production in kilos.	Gross Profit.	Dividend, per cent	Capital.	Sinking Fund.	Reserve	Total Reserves
Soie de Chardonnet Besançon	700,000	1,151,504fr.	60	900,000fr.	50,000fr		3,988,560fr.
Soie Artificielle de Tubize.....	500,000	2,294,575fr.	50	1,010,000fr.	516,771fr	350,000fr	920,000fr.
Ver. Kunst. A.-G Frankfort...	425,000	720,968M.	10	365,000M	245,703M	20,000M.	2,629,130M
Soc. Hongroise Sarvar(Hung'y)	250,000	790,000Cr			276,000Cr		

The last company had a debt to liquidate from the previous year of 204,599 Cr. The Societa Italiana della Sete Artificiale of Pavia, exploiting the same process, had a loss of 30,736 lire, and the Chardonnet Company of Paris entered into liquidation. The Tubize Company has announced an enlargement of business. The ammoniacal copper oxide process, judging from the profits of the companies working it, would seem to yield more uniform results, as the following table shows:

Company.	Production in kilos.	Gross Profit.	Dividend, per cent.	Capital.	Sinking Fund.	Reserve.	Total Reserves.
Ver. Glanzstoff-Fab. Elberfeld.	800,000	2,876,889M.	40	1,000,000M.	1,059,437M	550,000M.	3,962,323M.
E. Oester. Glstf. St. Polten	250,000	772,680M.	10	250,000M	321,614M.	68,242M.	15,152M.
Soie Artif. Paris.	200,000	511,622fr.	17	806,802fr.	142,262fr.	20,297fr.	86,543fr.
Soie Artif. Izieux.	150,000	380,389fr.	6	149,354fr.	137,953 fr	31,121fr.	31,121fr.

The German and Austrian companies have now considerably enlarged their works.

As a consequence of the British Patents Act the Vereinigte Glanzstoff-Fabriken have been obliged to form a company, the British Glanzstoff Manufacturing Company, Ltd., Liverpool, with a capital of £125,000, which expects to turn out from its factory at Flint 250,000 kilos annually.

There are no figures of importance available regarding the viscose process, as the principal manufacturers exploiting this method, the Henkel Donnersmarck'schen Kunstseiden und Acetatwerke of Sydowsaue, being a private firm, do not publish a report. Their production, however, is estimated at about 120,000 k. In England Courtauld & Co. of Coventry, are said to have produced 375,000 k. in 1908, making a profit of £46,968.

The production of natural silk for 1908 of the 24 European conditioning houses totaled 51,445,000 lb. as against 34,929,400 lb. in

1896–98, a net gain of but 30% in a decade. This included the three great producing centers—Europe, the Levant, and the Far East. The increase in Europe during this period is but 20% as compared with 50% in the Far East, and 100% for Asia Minor. This last increase is said to be primarily due to the efforts of the Silk Institute at Broussa, and the consequent introduction of scientific methods, especially in investigations of the entomology of the insects attacking the silk-worm larva. In France the production of cocoons has not increased for some years past, notwithstanding the fact that the French Government expends annually approximately $750,000 in state bounties to encourage their propagation.

In 1906, 227 spinning mills turned out 1,732,018 lb. of silk in France, and 1908 the amount had not increased.

The fact that artificial filaments, on account of their decreased tenderness and frangibility in the wet state, have not come into general competition with the filament from the silk worm, undoubtedly accounts for the fact that the phenomenal rise and expansion of the artificial silk industry has had no appreciable effect on the world's markets for natural silk. And as the ramifications of these artificial filaments are expanding, and new uses are continually being found, it very clearly appears that the consumption of artificial filaments must be very much larger than at the present day in order to influence to a detrimental extent the world's production of natural silk.[1]

1. The following information is taken from an article by J. Matthews in Textile Colorist, **27**, 322:

Société bisontine de Soie Chardonnet, founded in the year 1890 with a capital of $400,000, its actual daily production being 1,500 k. (3,300 lb.).

Société de Tubize, system Chardonnet, founded in the year 1890 with a capital of $200,000; its actual daily production amounting to 1,600 k. (3,520 lb.).

Soie artificielle de Givet, founded in the year 1903 with a capital of $300,000; its daily production being 200 k. (660 lb.).

Vereinigte Kunstseide-fabriken at Frankfort-on-the-Main, Germany, founded in 1900 with a capital of 2,500,000 marks; its daily production is now over 2,000 k. (4,400 lb.).

Vereinigte Glanztoff-fabriken, at Elberfeld, Germany, established in 1899 with a capital of 2,000,000 marks; the daily production of silk by this company in its several factories now amounts to over 1,200 k. (2,640 lb.).

Société française de la Viscose was established in 1904 with a capital of $440,000; its factory has a projected daily production of 500 k. (1,100 lbs.).

Société hongroise de la Viscose, with a capital of $848,000, and a similar projected production of silk.

Société italienne de la Viscose, with a capital of $600,000, and a similar projected production.

Société russe de la Viscose, with a capital of $800,000 and a similar projected production. These last four companies operate under the same patents and manufacture the silk from viscose. There is also a company operating under patents in England.

There is also a company established for the manufacture of artificial silk at Obourg, Belgium; it has a capitalization of $200,000, and a projected daily production of 500 k. (1,100 lbs.). Another company at Nivonne, France, with a capital of $200,000, also proposes to manufacture 500 k. of silk per day. There

is another French company of J. D. Ramel, with a capital of $500,000, but which does not yet produce any silk. A Russian branch of the Tubize factory is also established with a capital of $1,000,000.

In addition to the above there are four other French companies, as follows: The *Soie de Beaulieu* with a capital of $400,000, the *Soie Valleste* at Lyons, with a capital of $300,000; the *Soie artificielle d'Izieux*, with a capital of $400,000; and the *Textiles Lyonnaise*, with a capital of $160,000. None of these companies is as yet an actual producer of silk.

In addition to the companies mentioned in the foregoing summary there are several others located in Germany, Switzerland, and England, from which statistics are not available.

The *Compagnie de la Soie de Beaulieu* was organized in Paris in July, 1904. It is capitalized at 2,000,000 francs. Its process of manufacture is very similar to that employed by the Chardonnet company.

The *Société la Soie artificielle* is another French company, capitalized at 1,500,000 francs. It was organized in 1902, and acquired the patents held by the *Compagnie française de la Soie parisienne*. The process by which it operates depends on the formation of filaments from solutions of cellulose in ammoniacal copper oxide. The factory of the company is located at Givet; hence the product is known as "Givet silk." A branch of this company is the *Soie artificielle d'Izieux* at Lyons: it has a factory at Izieux near St. Charmond.

The *Textiles Lyonnaise* company deals in other things besides artificial silk, but takes the entire output of the *Société A. Lumière et Fils*.

The *Société de la Soie artificielle Valette* at Lyons was organized in 1904 with a capital of 1,500,000 francs.

The first German company for the manufacture of artificial silk was the *Vereinigte Glanzstoff-fabriken*, established in September, 1890, at Aix-la-Chapelle. It was formed for the commercial exploitation of "Glanzstoff." This is the same company which transferred its French patents to the *Soie parisienne* company; this latter company was absorbed by the *Soie artificielle de Givet* company, which in turn transferred to the Lyonnaise factory of Givet a license to manufacture the product under the name of "Soie artificielle d'Izieux." This first German company started with a capital of 2,000,000 marks, one-half of which served to pay for the patent rights. The company now operates two factories, one at Oberbruck in Westphalia and the other at Niederworsmiller, near Mulhouse.

The second German company to be formed was the *Vereinigte Kunstseide-fabriken*, established at Frankfort in February, 1900. It commenced with a capital of 2,500,000 marks, and its work is under the direction of Becker and Lehner. The company now operates four factories: One at Spreitenbach, which had previously been operated by Lehner, whose process of manufacture is a modification of the Chardonnet method; a second at Glattbrugg; a third at Bobingen; and a fourth at Kestlerbach.

The *Vereinigte Glanzstoff-fabriken* at Oberbruch, Germany, has been operating its factory during the past year both night and day without interruption; over 1,700 workmen are employed at this factory.

The introduction of the manufacture of artificial silk into Italy has apparently caused considerable concern among several of the Italian silk manufacturers; so much so, in fact, that the government has been petitioned to prevent the sale of the artificial fiber under the name of silk, as it is feared the natural silk industry will suffer thereby.

The establishment of a factory for the manufacture of artificial silk was under consideration at Wilanow, near Tamaschow, in Russian Poland. Owing to the recent political troubles there, however, it has been decided to locate the factory in the province of Posen, or German Poland.

PLEASE DO NOT REMOVE
CARDS OR SLIPS FROM THIS POCKET

UNIVERSITY OF TORONTO LIBRARY

TP
248
N7W6
v.1

ENGIN.